PFS #05 Conforms to HUD MHCSS 10/11/06

CHAMPION

Setup and Installation Addendum

for

SHIP LOOSE DECK

(40 psf Maximum Live Load - Wind Zone I Only)

NOTES:

1. ALL EXPOSED LUMBER SHALL BE PRESSURE TREATED WITH PRESERVATIVE.
2. ALL FASTENERS AND HANGERS SHALL BE CORROSIVE RESISTIVE TO WEATHER AND WOOD PRESERVATIVE TREATMENT.
3. NO ROOF OVER DECK.
4. STAIRS AND/OR GUARDRAILS CONSTRUCTED ON SITE PER LOCAL AUTHORITY HAVING JURISDICTION.

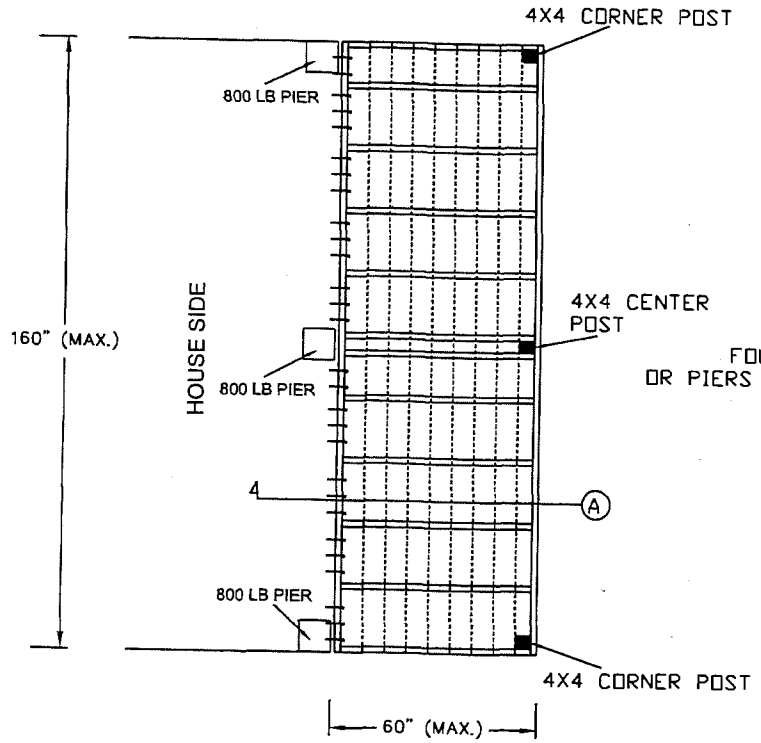

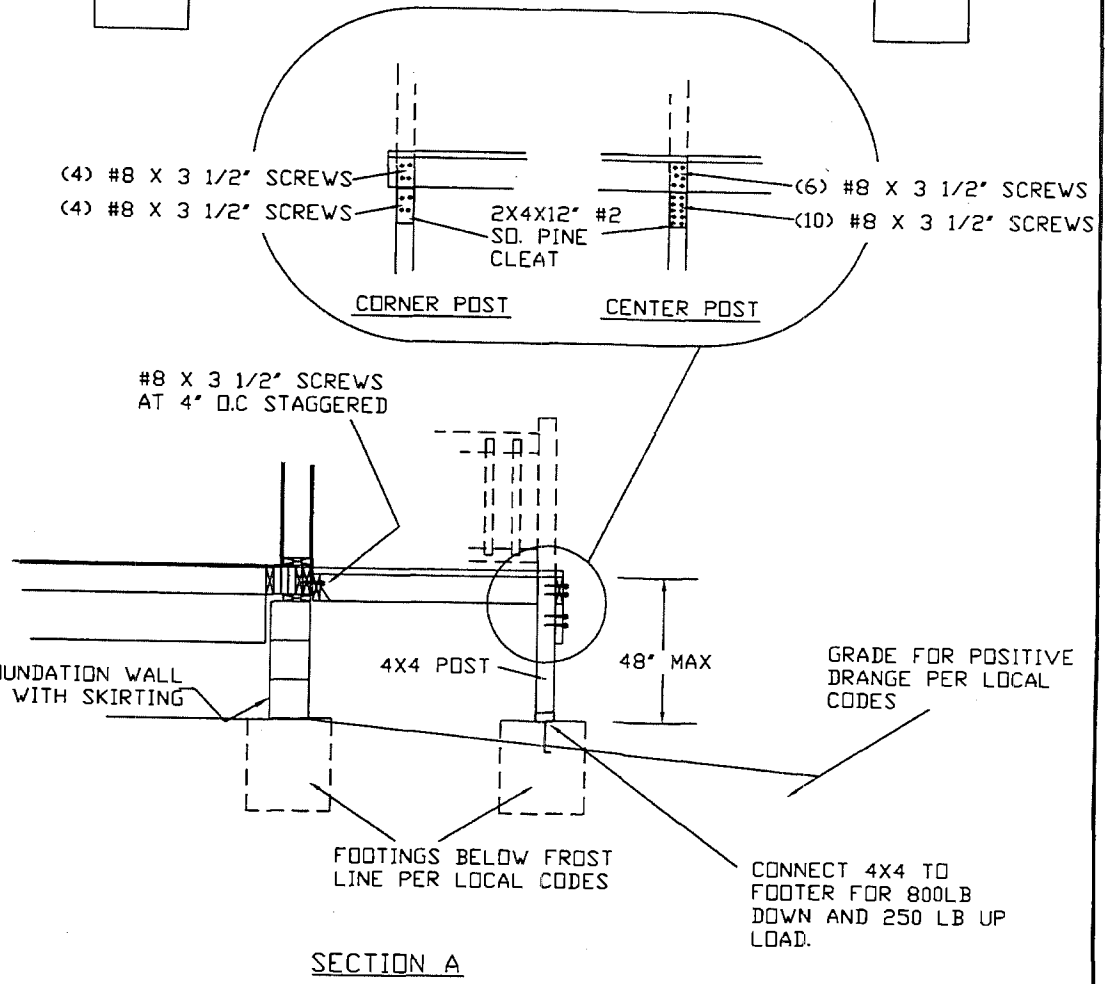

SECTION A

DAPIA SEAL	ENGINEER SEAL	MODIFICATIONS	TITLE: ADDENDUM	DRAWING NO.
PFS #05 Conforms to HUD MHCSS 10/11/06	DAVID R. KELLER REGISTERED No. 8503593 STATE OF INDIANA PROFESSIONAL ENGINEER 10/11/06		SHIP LOOSE DECK DETAILS	IN49.230.02
			DRAWN BY: CEI / DATE: 10/03/06 / N.T.S.	SHEET: 2 OF 2
			CALC. INDEX NO. : W-311.2	

PROPRIETARY AND CONFIDENTIAL
THESE DRAWINGS AND SPECIFICATIONS ARE ORIGINAL, PROPRIETARY AND CONFIDENTIAL MATERIALS OF CHAMPION.
COPYRIGHT © 1976-2006 BY CHAMPION

CHAMPION

PFS #05
Conforms to
HUD MHCSS
11/30/06

Champion

Setup and Installation Addendum
for
Two(2) Floors On One(1) Transportation Chassis
(All Wind Zones)

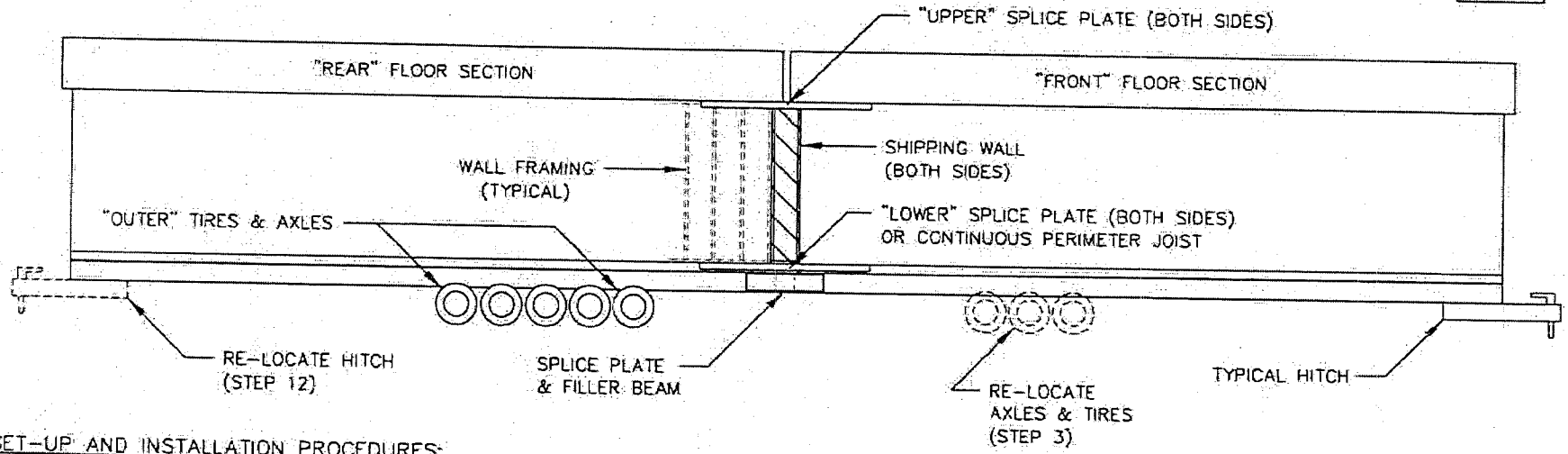

SET-UP AND INSTALLATION PROCEDURES:

1. MOVE THE HOME TO AN AREA WHERE IT CAN PLACED IN A LEVEL POSITION.
2. RAISE AND BLOCK THE FRAME IN ORDER TO RE-LOCATE AXLES AND TIRES. (SEE CHAMPION INSTALLATION MANUAL: SECTION 5.3, FIGURE 5.1)
3. STARTING WITH THE "OUTER" TIRES AND AXLES, REMOVE 2 OR 3 AXLES (ONE SHALL BE AN AXLE WITH BRAKE ASSEMBLY) FROM THE FIVE AXLE ASSEMBLY, AND MOVE THEM TO THE "FRONT" FLOOR SECTION.

   NOTE: MAKE SURE THE AXLES AND BRAKE WIRING HAVE BEEN PROPERLY CONNECTED PRIOR TO MOVING THE "FRONT" FLOOR SECTION.
4. REMOVE ALL SHIPPING PLASTIC AND TAPE FROM THE JOINTS BETWEEN THE FLOOR SECTIONS.
5. BLOCK AND SUPPORT THE MAIN FRAME BEAMS ALONG EACH SIDE OF THE SPLICE PLATE LOCATIONS.
6. REMOVE THE "UPPER" SPLICE PLATES FROM EACH SIDE OF THE FLOOR SECTIONS.
7. REMOVE THE SHIPPING WALLS FROM EACH SIDE OF THE FLOOR SECTIONS.
8. REMOVE THE "LOWER" SPLICE PLATES OR CUT THE CONTINUOUS PERIMETER JOIST BETWEEN THE FLOOR SECTIONS, ON EACH SIDE OF THE FLOOR.
9. REMOVE EACH OF THE MAIN FRAME SPLICE PLATES AND FILLER BEAMS LOCATED BETWEEN THE FLOOR SECTIONS.
10. PULL THE FLOOR SECTIONS APART, AND SET THE "FRONT" FLOOR SECTION ONTO ITS PIERS OR FOUNDATION SYSTEM.
11. RE-LOCATE THE FRAME HITCH FROM THE "FRONT" FLOOR SECTION TO THE "REAR" FLOOR SECTION.

    NOTE: MAKE SURE THE HITCH AND BRAKE WIRING HAVE BEEN PROPERLY CONNECTED PRIOR TO MOVING THE "REAR" FLOOR SECTION.
12. PULL THE "REAR" FLOOR SECTION TO ITS DESIRED LOCATION AND REPEAT THE REQUIRED SET-UP PROCEDURES.
13. FOR ALL OTHER INFORMATION AND REQUIRED SET-UP PROCEDURES, SEE THE CHAMPION INSTALLATION MANUAL.
14. ALL PARTS REMOVED SHALL BE KEPT WITH HOME, SO HOME MAY BE RELOCATED AT A LATER DATE. (A)

A | CHASSIS SEPARATION AND SET-UP

DAPIA SEAL	ENGINEER SEAL	MODIFICATIONS	TITLE: ADDENDUM	DRAWING NO.
PFS #05 Conforms to HUD MHCSS 11/30/06		(Was CEI: IN49.867.02) (A) REVISED DETAIL AND NOTES. MAT 12/16/04 (B) ADD NOTE 14. D.K. 10/27/06 (C) REVISE PAGE 4. D.K. 11/16/06	TWO(2) FLOORS ON ONE(1) TRANSPORTATION CHASSIS	IN49.867.02C
			DRAWN BY: CEI DATE: 10/26/04 N.T.S.	SHEET: 2 OF 4
			CALC. INDEX NO. :	

PROPRIETARY AND CONFIDENTIAL
THESE DRAWINGS AND SPECIFICATIONS ARE ORIGINAL, PROPRIETARY AND CONFIDENTIAL MATERIALS OF CHAMPION.
COPYRIGHT © 1976-2006 BY CHAMPION

CHAMPION

TIE-DOWN ANCHOR LOCATIONS:

NOTE: TYPICAL SPACING SHALL BE AS DETERMINED BY THE CHAMPION INSTALLATION MANUAL.

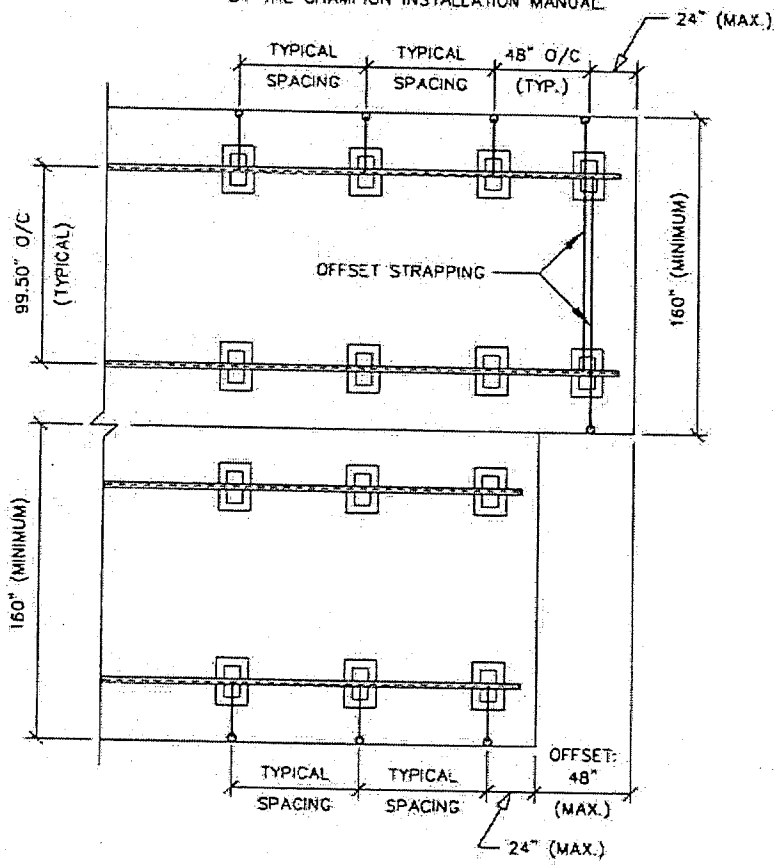

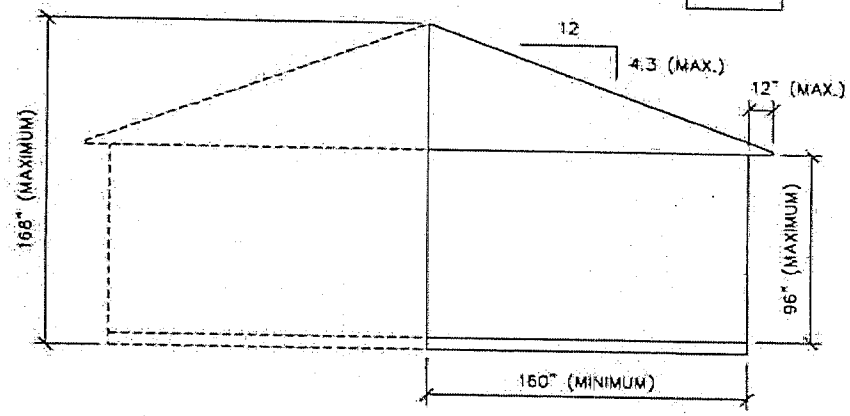

NOTE:

1. THIS DETAIL ONLY ADDRESSES THE TIE-DOWN AND ANCHORAGE FOR THE OFFSET PORTION OF THE HOME.
2. FOR ALL OTHER DETAILS, SPECIFICATOINS AND INSTRUCTIONS, SEE THE CHAMPION INSTALLATION MANUAL.

OFFSET TIE-DOWN STRAPPING ORIENTATION:

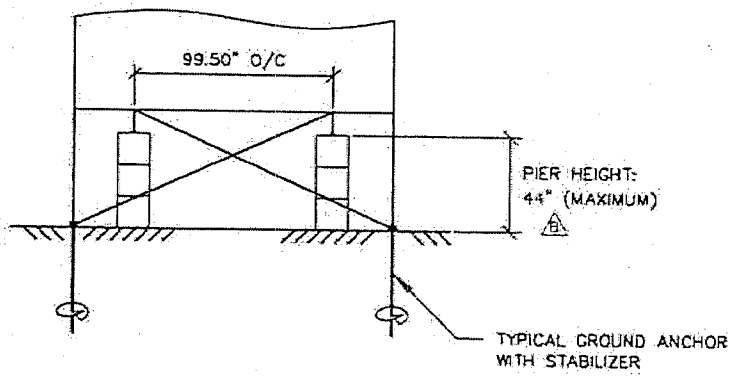

B | TIE-DOWN DETAILS FOR OFFSET MULTI-SECTIONAL HOMES (FOR WIND ZONES II & III)

DAPIA SEAL

PFS #05 Conforms to HUD MHCSS 11/30/06

ENGINEER SEAL

DAVID R. KELLER REGISTERED No. 8503593 STATE OF INDIANA PROFESSIONAL ENGINEER

MODIFICATIONS

(Was CEI: IN49.866)

B REVISED PER HEIGHT. D.K. 10/27/06

C REVISED PAGE 4. D.K. 11/16/06

PROPRIETARY AND CONFIDENTIAL
THESE DRAWINGS AND SPECIFICATIONS ARE ORIGINAL, PROPRIETARY AND CONFIDENTIAL MATERIALS OF CHAMPION
COPYRIGHT © 1978-2006 BY CHAMPION

TITLE: ADDENDUM TWO(2) FLOORS ON ONE(1) TRANSPORTATION CHASSIS

DRAWING NO. IN49.867.03C

SHEET: 3 OF 4

DRAWN BY: CEI | DATE: 09/14/00 | N.T.S.

CALC. INDEX NO.: I-044B

CHAMPION

TIE-DOWN ANCHOR LOCATIONS:

NOTE: TYPICAL SPACING SHALL BE AS DETERMINED BY THE CHAMPION INSTALLATION MANUAL.

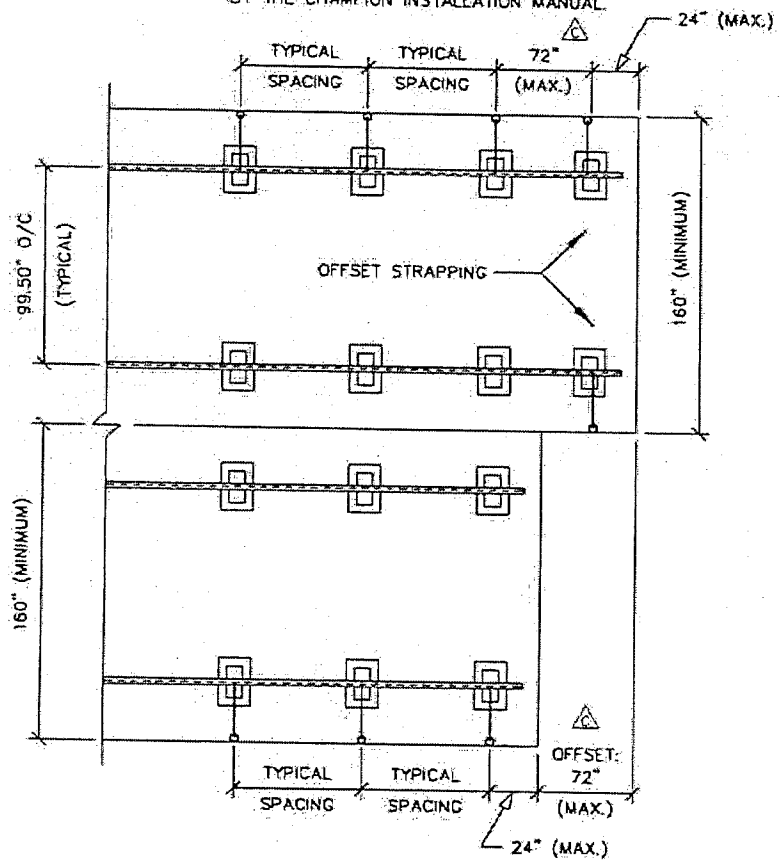

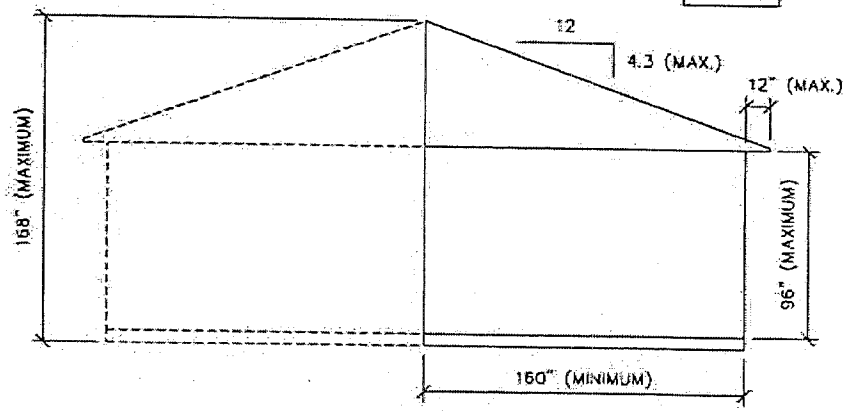

NOTE:

1. THIS DETAIL ONLY ADDRESSES THE TIE-DOWN AND ANCHORAGE FOR THE OFFSET PORTION OF THE HOME.
2. FOR ALL OTHER DETAILS, SPECIFICATOINS AND INSTRUCTIONS, SEE THE CHAMPION INSTALLATION MANUAL.

OFFSET TIE-DOWN STRAPPING ORIENTATION:

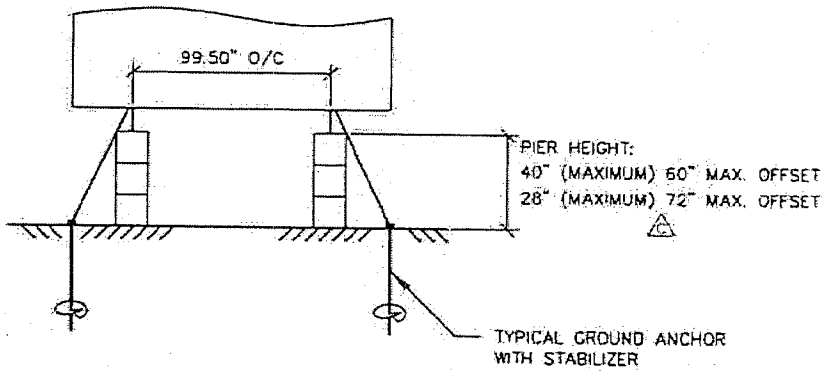

B | TIE-DOWN DETAILS FOR OFFSET MULTI-SECTIONAL HOMES (FOR WIND ZONE I)

DAPIA SEAL

PFS #05 Conforms to HUD MHCSS 11/30/06

ENGINEER SEAL

DAVID R. KELLER REGISTERED No. 8503593 STATE OF INDIANA PROFESSIONAL ENGINEER

MODIFICATIONS

C REVISE OFFSET TO 72" MAX. D.K. 11/16/06

PROPRIETARY AND CONFIDENTIAL
THESE DRAWINGS AND SPECIFICATIONS ARE ORIGINAL, PROPRIETARY AND CONFIDENTIAL MATERIALS OF CHAMPION
COPYRIGHT © 1976-2006 BY CHAMPION

TITLE: ADDENDUM
TWO(2) FLOORS ON ONE(1) TRANSPORTATION CHASSIS

DRAWING NO. IN49.867.04C

SHEET: 4 OF 4

DRAWN BY: CEI | DATE: 10/27/06 | N.T.S.

CALC. INDEX NO. : I-044.1, I-044.2

CHAMPION

Champion

Setup and Installation Addendum

for

CENTER LINE DROP FLOOR

APPROVED
PFS Corporation
Dallas - 2
04/30/02
HUD Manufactured Home Construction & Safety Standard

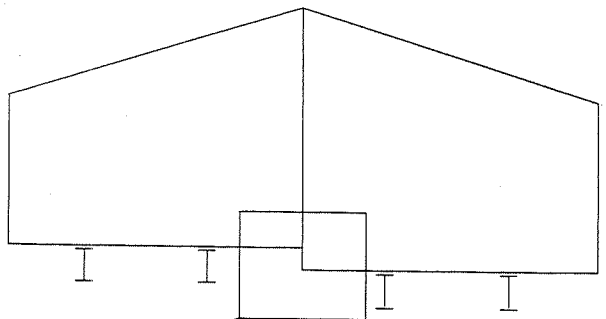

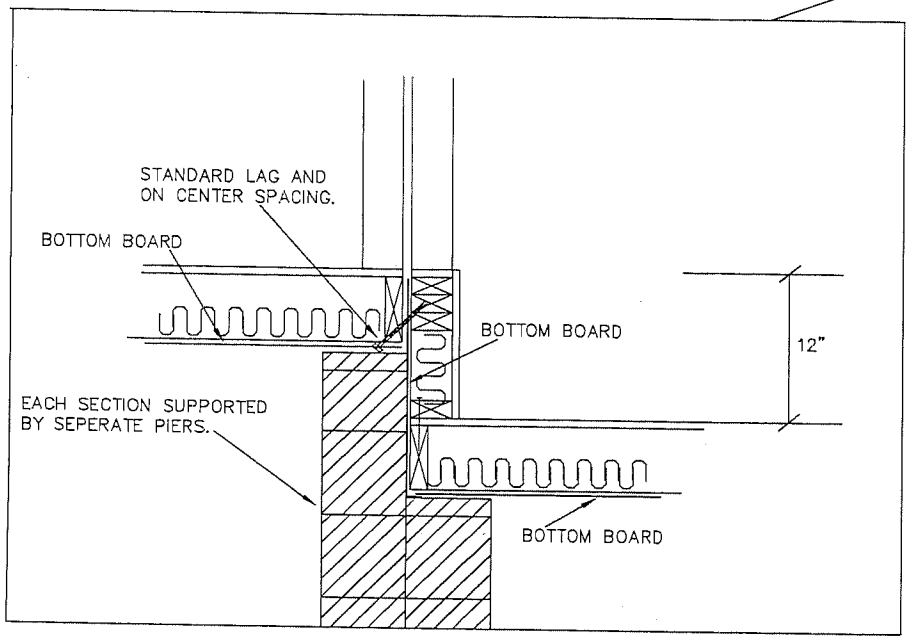

TYPICAL DETAIL

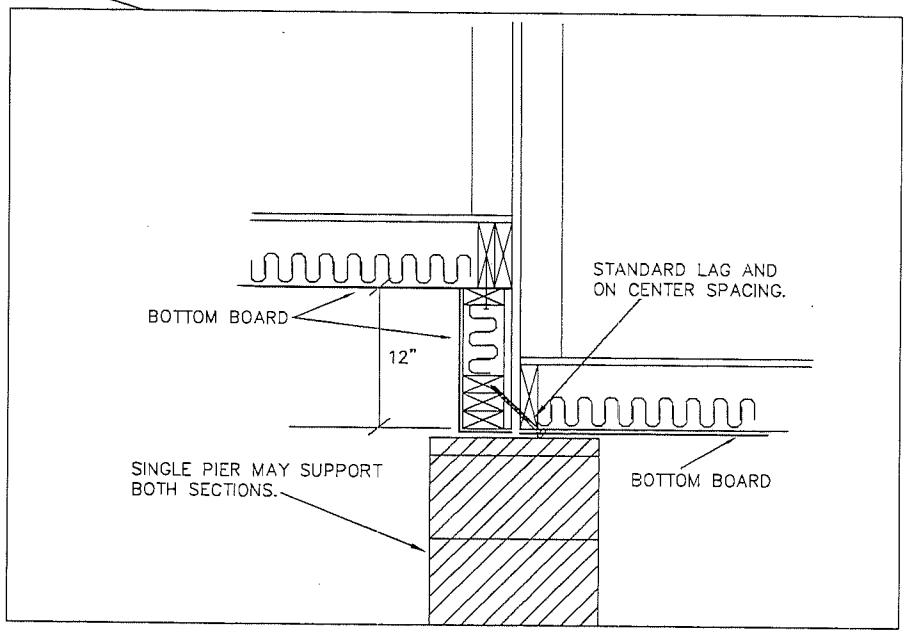

OPTIONAL DETAIL

DAPIA SEAL	ENGINEER SEAL	MODIFICATIONS	TITLE: SET–UP ADDENDUM CENTER LINE DROP FLOOR	DRAWING NO. IN49.015A.02
APPROVED PFS Corporation Dallas - 2 04/30/02 HUD Manufactured Home Construction & Safety Standard		ADDED PIER BLOCKING	DRAWN BY: CEI · DATE: 9/27/99 · NO SCALE CALC. INDEX NO.:	SHEET: 2 OF 2

CHAMPION

APPROVED
PFS Corporation
Dallas TX – 2
7/14/04
HUD Manufactured Home Construction & Safety Standard

Champion

Installation Manual Addendum

for

Water Supply Testing: 8.1.4

APPROVED
PFS Corporation
Dallas TX - 2
7/14/04
HUD Manufactured Home Construction & Safety Standard

Champion

8.1.4.1 TOILET TANK WATER LEVEL

AFTER TESTING THE WATER SUPPLY SYSTEM, ADJUST WATER IN TANK TO LEVEL INDICATED USING THE WATER LEVEL ADJUSTMENT SCREW LOCATED ON THE TOILET TANK FLOAT VALVE.

PROPRIETARY AND CONFIDENTIAL
THESE DRAWINGS AND SPECIFICATIONS ARE ORIGINAL, PROPRIETARY AND CONFIDENTIAL MATERIALS OF CHAMPION.
COPYRIGHT © 1976-2004 BY CHAMPION

APPROVED
PFS Corporation
Dallas TX – 2
7/12/04
HUD Manufactured Home Construction & Safety Standard

Champion

Installation Manual Addendum

for

Minimum Pier Loads: Table 4.1A

Champion

Table 4.1A: MINIMUM PIER LOADS

FRAME BLOCKING ONLY
When Perimeter Support is Not Required Except at Openings

Nominal Floor Width	Roof Live Load PSF	Minimum Peir Capacity - Lbs.					
		Maximum Pier Spacing - Feet					
		4	6	8	9	10	12
12	20	2,300	3,400	4,500	5,100	5,700	6,800 (a)
	30	2,500	3,800	5,100	5,700	6,400	7,600 (a)
	40	2,800	4,300	5,700	6,400	7,100	8,500 (a)
13	20	2,500	3,800	5,000	5,600	6,300	7,500 (a)
	30	2,800	4,200	5,600	6,300	7,000	8,400 (a)
	40	3,100	4,700	6,300	7,000	7,800 (a)	9,400 (a)
14	20	2,600	3,800	5,100	5,800	6,400	7,700 (a)
	30	2,900	4,300	5,800	6,500	7,200	8,600 (a)
	40	3,200	4,800	6,400	7,200	8,000 (a)	9,600 (a)
16	20	2,900	4,300	5,700	6,400	7,100	8,600 (a)
	30	3,200	4,800	6,400	7,200	8,000 (a)	9,600 (a)
	40	3,500	5,300	7,100	8,000	8,800 (a)	10,600 (a)
18	20	3,300	4,900	6,500	7,400	8,200 (a)	9,800 (a)
	30	3,700	5,500	7,300	8,200	9,200 (a)	11,000 (a)

(a) - Minmum 10 inch High Main Frame I-Beam

(b) - Minmum 12 inch High Main Frame I-Beam

- IF CONDITIONS CANNOT BE FOUND IN THIS TABLE, USE TABLE 4.2A & B

DAVID R. KELLER
REGISTERED
No.
8503593
STATE OF
07/12/04
INDIANA
PROFESSIONAL ENGINEER

David R. Keller

APPROVED
PFS Corporation
Dallas TX – 2
7/12/04
HUD Manufactured Home Construction & Safety Standard

PROPRIETARY AND CONFIDENTIAL
THESE DRAWINGS AND SPECIFICATIONS ARE ORIGINAL, PROPRIETARY AND CONFIDENTIAL MATERIALS OF CHAMPION.
COPYRIGHT © 1976-2004 BY CHAMPION

IN49.057.E
CEI: I-147, I-147.1,
R-141.2, R-142.2

PFS #10 Conforms to HUD MHCSS 6/2/06

CHAMPION

Set-Up and Installation Addendum for Hinged Roof Trusses:

Roof Pitch = 4/12 Thru 7/12

(Roof Live Load = 80 PSF - Maximum)

(Wind Zones I & II: 80" to 99 1/2" Frames)

PROPRIETARY AND CONFIDENTIAL
THESE DRAWINGS AND SPECIFICATIONS ARE ORIGINAL, PROPRIETARY AND CONFIDENTIAL MATERIALS OF CHAMPION.
COPYRIGHT © 1976-2005 BY CHAMPION

Champion

TIE-DOWN NEAR BEAM: WIND ZONE I
SINGLE-SECTION OF OFFSET DOUBLE WIDE
(ROOF PEAK AT CENTER OF FLOOR)

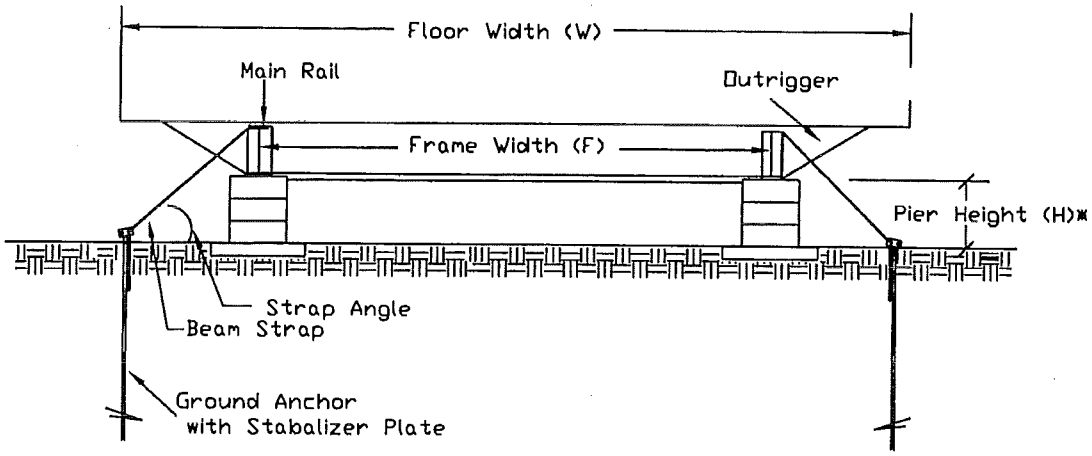

NOTE: FOR 4:12 PITCH ANCHOR SPACING SEE CURRENT INSTALLATION MANUAL

ANCHOR SPACING (FT)

W	F (in)	H* (in)	5:12 PITCH WALL HEIGHT (in) 84	90	96	102	108	114	6:12 PITCH WALL HEIGHT (in) 84	90	96	102	108	114	7:12 PITCH WALL HEIGHT (in) 84	90	96	102	108	114
14	80	20	9.5	9.0	8.5	7.5	7.0	6.5	9.0	8.0	7.5	7.0	6.5	6.0	8.0	7.0	6.5	6.0	5.5	5.5
		40	7.5	7.5	7.0	6.5	6.5	6.5	7.0	7.0	6.5	6.5	6.0	6.0	7.0	6.5	6.5	6.0	6.0	5.5
		60	6.0	6.0	5.5	5.5	5.0	5.0	6.0	5.5	5.5	5.0	5.0	5.0	5.5	5.0	5.0	5.0	4.5	4.5
		80	5.0	5.0	4.5	4.5	4.5	4.0	4.5	4.5	4.5	4.0	4.0	-	4.5	4.5	4.0	4.0	-	-
	96	20	9.0	8.5	8.0	8.0	7.5	7.0	8.5	8.0	7.5	7.5	7.0	7.0	8.0	7.5	7.5	7.0	7.0	6.5
		40	6.5	6.5	6.0	6.0	5.5	5.5	6.0	6.0	6.0	5.5	5.5	5.0	6.0	5.5	5.5	5.5	5.0	5.0
		60	5.0	5.0	4.5	4.5	4.5	4.0	5.0	4.5	4.5	4.5	4.0	4.0	4.5	4.5	4.5	4.0	-	-
		80	4.0	-	-	-	-	-	-	-	-	-	-	-	-	-	-	-	-	-
	99.5	20	8.5	8.0	8.0	7.5	7.5	7.0	8.0	8.0	7.5	7.0	7.0	6.5	7.5	7.5	7.0	7.0	6.5	6.5
		40	6.5	6.0	6.0	5.5	5.5	5.0	6.0	5.5	5.5	5.5	5.0	5.0	5.5	5.5	5.5	5.0	5.0	4.5
		60	5.0	4.5	4.5	4.5	4.0	4.0	4.5	4.5	4.5	4.0	-	-	4.5	4.0	4.0	-	-	-
16	80	20	8.5	7.5	7.0	6.5	6.0	5.5	7.0	6.5	6.0	5.5	5.0	5.0	6.5	6.0	5.5	5.0	4.5	4.5
		40	8.5	8.5	8.0	7.5	7.5	7.0	8.0	8.0	7.5	7.0	7.0	6.5	7.5	7.5	7.0	6.5	6.0	6.0
		60	7.0	7.0	6.5	6.5	6.0	6.0	7.0	6.5	6.5	6.0	6.0	5.5	6.5	6.0	6.0	5.5	5.5	5.5
		80	6.0	6.0	5.5	5.5	5.0	5.0	5.5	5.5	5.5	5.0	5.0	5.0	5.5	5.0	5.0	5.0	4.5	4.5
	96 to 99.5	20	9.5	9.5	9.0	8.0	7.5	7.0	9.0	8.0	7.5	7.0	6.5	6.0	8.0	7.5	7.0	6.5	6.0	5.5
		40	8.0	7.5	7.0	7.0	6.5	6.5	7.5	7.0	7.0	6.5	6.0	6.0	7.0	6.5	6.5	6.0	6.0	6.0
		60	6.5	6.0	6.0	5.5	5.5	5.0	6.0	5.5	5.5	5.5	5.0	5.0	5.5	5.5	5.0	5.0	5.0	4.5
		80	5.0	5.0	5.0	4.5	4.5	4.0	5.0	4.5	4.5	4.5	4.0	-	4.5	4.5	4.0	4.0	-	-

* Pier Heights are maximum for allowable strap angle. Minimum Pier Height 20 inches.

DAVID R. KELLER
REGISTERED
No.
8503593
STATE OF
INDIANA
05/25/06
PROFESSIONAL ENGINEER

David R. Keller

PFS #10 ®
Conforms to
HUD MHCSS
6/2/06

Champion

TIE-DOWN NEAR BEAM: WIND ZONE I
DOUBLE WIDE UNITS

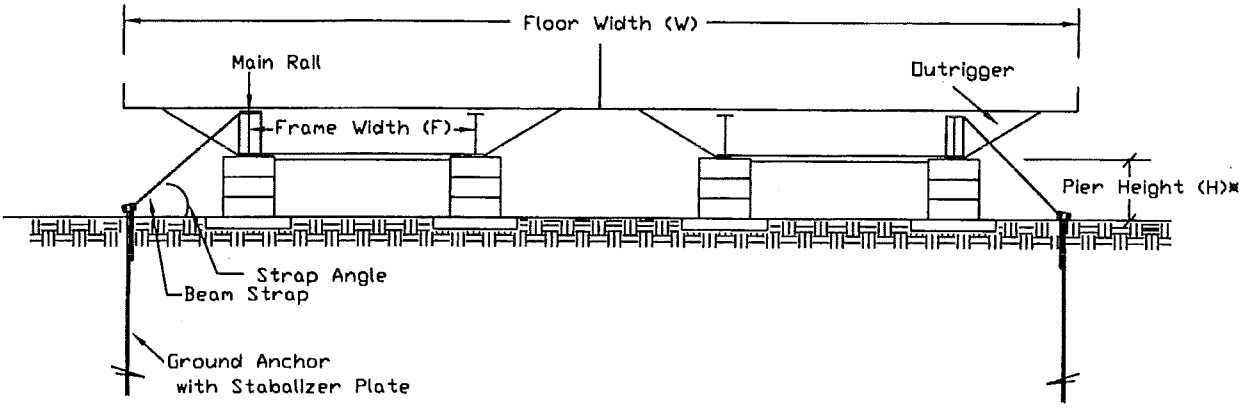

NOTE: FOR 4:12 PITCH ANCHOR SPACING SEE CURRENT INSTALLATION MANUAL

ANCHOR SPACING (FT)

W	F (in)	H* (in)	5:12 PITCH WALL HEIGHT (in) 84	90	96	102	108	114	6:12 PITCH WALL HEIGHT (in) 84	90	96	102	108	114	7:12 PITCH WALL HEIGHT (in) 84	90	96	102	108	114
24	80	20	7.5	7.5	7.0	7.0	6.5	6.5	7.0	7.0	6.5	6.5	6.0	6.0	6.5	6.5	6.0	6.0	6.0	5.5
		40	5.5	5.5	5.0	5.0	5.0	4.5	5.0	5.0	5.0	4.5	4.5	4.5	5.0	4.5	4.5	4.5	4.0	4.0
		60	4.5	4.0	-	-	-	-	-	-	-	-	-	-	-	-	-	-	-	-
	96	20	6.5	6.0	6.0	5.5	5.5	5.0	6.0	5.5	5.5	5.0	5.0	5.0	5.5	5.5	5.0	5.0	5.0	4.5
		40	4.5	4.0	-	-	-	-	-	-	-	-	-	-	-	-	-	-	-	-
	99.5	20	6.0	6.0	5.5	5.0	5.0	5.0	5.5	5.5	5.0	5.0	5.0	4.5	5.0	5.0	5.0	4.5	4.5	4.5
		40	4.0	-	-	-	-	-	-	-	-	-	-	-	-	-	-	-	-	-
28	80	20	8.0	8.0	7.5	7.5	7.0	7.0	7.5	7.0	7.0	7.0	6.5	6.5	7.0	6.5	6.5	6.5	6.0	6.0
		40	6.5	6.0	6.0	5.5	5.5	5.5	6.0	5.5	5.5	5.5	5.0	5.0	5.5	5.5	5.0	5.0	5.0	4.5
		60	5.0	5.0	4.5	4.5	4.5	4.5	4.5	4.5	4.5	4.0	4.0	-	4.5	4.0	4.0	-	-	-
		80	4.0	4.0	-	-	-	-	-	-	-	-	-	-	-	-	-	-	-	-
	96	20	7.5	7.0	7.0	6.5	6.5	6.0	7.0	6.5	6.5	6.0	6.0	6.0	6.5	6.0	6.0	6.0	5.5	5.5
		40	5.5	5.5	5.0	5.0	5.0	4.5	5.0	5.0	5.0	4.5	4.5	4.5	4.5	4.5	4.5	4.5	4.0	4.0
		60	4.0	4.0	-	-	-	-	-	-	-	-	-	-	-	-	-	-	-	-
	99.5	20	7.0	7.0	6.5	6.5	6.5	6.0	6.5	6.5	6.0	6.0	6.0	5.5	6.0	6.0	6.0	5.5	5.5	5.5
		40	5.5	5.0	5.0	5.0	4.5	4.5	5.0	4.5	4.5	4.5	4.0	4.0	4.5	4.5	4.0	4.0	4.0	-
		60	4.0	-	-	-	-	-	-	-	-	-	-	-	-	-	-	-	-	-
32	80	20	8.5	8.0	8.0	7.5	7.5	7.0	7.5	7.5	7.0	7.0	7.0	6.5	7.0	7.0	6.5	6.5	6.5	6.0
		40	7.0	6.5	6.5	6.5	6.0	6.0	6.5	6.0	6.0	6.0	5.5	5.5	6.0	5.5	5.5	5.5	5.5	5.0
		60	6.0	5.5	5.5	5.0	5.0	5.0	5.5	5.0	5.0	5.0	4.5	4.5	5.0	5.0	4.5	4.5	4.5	4.0
		80	5.0	4.5	4.5	4.5	4.5	4.0	4.5	4.5	4.0	4.0	-	-	4.0	4.0	-	-	-	-
	96 to 99.5	20	8.0	7.5	7.5	7.0	7.0	6.5	7.0	7.0	6.5	6.5	6.5	6.0	6.5	6.5	6.5	6.0	6.0	6.0
		40	6.0	6.0	6.0	5.5	5.5	5.0	5.5	5.5	5.5	5.0	5.0	5.0	5.5	5.0	5.0	5.0	4.5	4.5
		60	5.0	5.0	4.5	4.5	4.5	4.0	4.5	4.5	4.0	4.0	-	-	4.0	4.0	-	-	-	-
		80	4.0	-	-	-	-	-	-	-	-	-	-	-	-	-	-	-	-	-

*Pier heights are max. for allowable strap angle. Min. pier height is 20 inches.

DAVID R. KELLER
REGISTERED
No.
8503593
STATE OF
INDIANA
05/25/06
PROFESSIONAL ENGINEER

PFS #10
Conforms to
HUD MHCSS
6/2/06

Champion

TIE-DOWN NEAR BEAM: WIND ZONE II
SINGLE & MULTI-SECTION UNITS
(ROOF PEAK AT CENTER OF FLOOR)

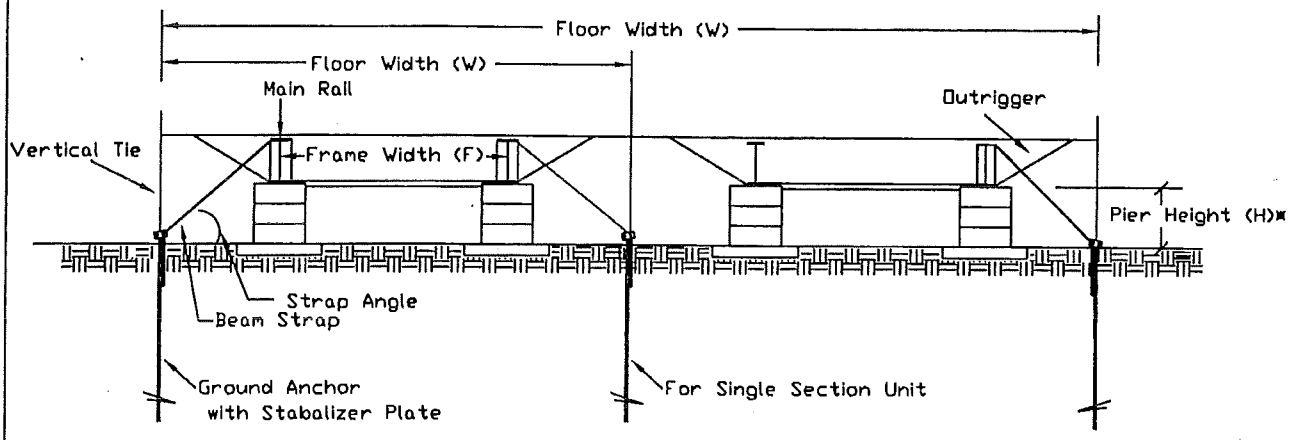

NOTE: FOR 4:12 PITCH ANCHOR SPACING SEE CURRENT INSTALLATION MANUAL

ANCHOR SPACING (FT)

W	F (in)	H* (in)	5:12 PITCH WALL HEIGHT (in) 84	90	96	102	108		6:12 PITCH WALL HEIGHT (in) 84	90	96	102	108		7:12 PITCH WALL HEIGHT (in) 84	90	96	102	108	
14	80	20	5.3	4.0	4.0	4.0	4.0	-	4.0	4.0	4.0	4.0	4.0	-	4.0	4.0	4.0	4.0	4.0	-
		40	4.0	-	-	-	-	-	-	-	-	-	-	-	-	-	-	-	-	-
	96	20	4.0	4.0	4.0	4.0	4.0	-	4.0	4.0	4.0	-	-	-	4.0	4.0	-	-	-	-
	99.5	20	4.0	4.0	4.0	4.0	-	-	4.0	4.0	-	-	-	-	4.0	-	-	-	-	-
16	80	20	5.3	5.3	5.3	4.0	4.0	-	5.3	4.0	4.0	4.0	4.0	-	4.0	4.0	4.0	4.0	4.0	-
		40	4.0	4.0	4.0	4.0	-	-	4.0	4.0	4.0	-	-	-	4.0	4.0	-	-	-	-
	96	20	5.3	5.3	4.0	4.0	4.0	-	4.0	4.0	4.0	4.0	4.0	-	4.0	4.0	4.0	4.0	4.0	-
		40	4.0	4.0	-	-	-	-	-	-	-	-	-	-	-	-	-	-	-	-
	99.5	20	5.3	4.0	4.0	4.0	4.0	-	4.0	4.0	4.0	4.0	4.0	-	4.0	4.0	4.0	4.0	4.0	-
		40	4.0	-	-	-	-	-	-	-	-	-	-	-	-	-	-	-	-	-
28	80	20	4.0	4.0	4.0	-	-	-	4.0	-	-	-	-	-	-	-	-	-	-	-
32	80	20	4.0	4.0	4.0	4.0	4.0	-	4.0	4.0	-	-	-	-	-	-	-	-	-	-
	96	20	4.0	4.0	4.0	-	-	-	-	-	-	-	-	-	-	-	-	-	-	-
	99.5	20	4.0	4.0	-	-	-	-	-	-	-	-	-	-	-	-	-	-	-	-

*Pier height is max. for allowable strap angle. Min. pier height is 20 inches.

DAVID R. KELLER
REGISTERED
No.
8503593
STATE OF
INDIANA
PROFESSIONAL ENGINEER
05/25/06

David R. Keller

PFS #10
Conforms to
HUD MHCSS
6/2/06

Champion

TIE-DOWN SECOND BEAM: WIND ZONE II
OFFSET SINGLE SECTION & DOUBLE WIDE UNITS
(ROOF PEAK AT CENTER OF FLOOR)

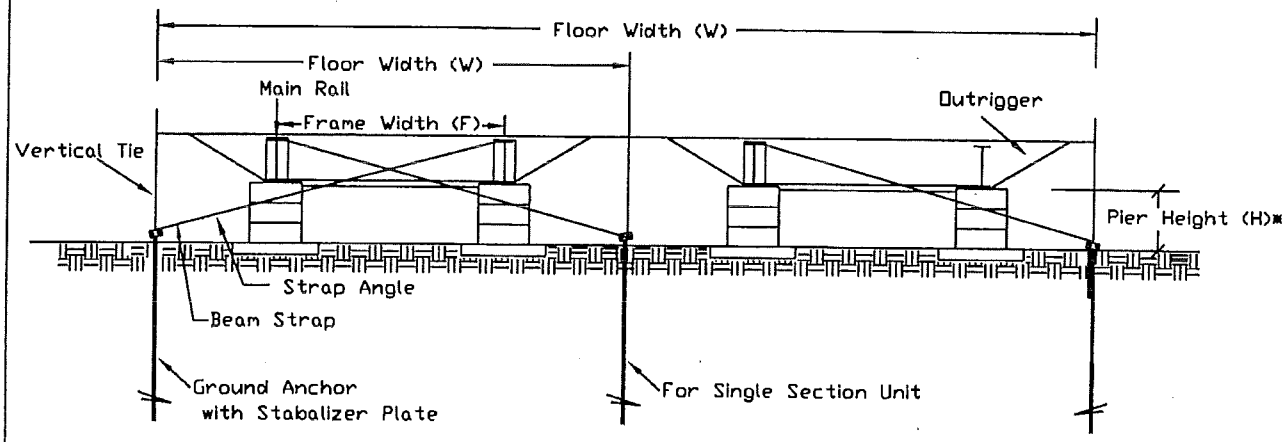

NOTE: FOR 4:12 PITCH ANCHOR SPACING SEE CURRENT INSTALLATION MANUAL

ANCHOR SPACING (FT)

W	F (in)	H* (in)	5:12 PITCH WALL HEIGHT (in) 84	90	96	102	108		6:12 PITCH WALL HEIGHT (in) 84	90	96	102	108		7:12 PITCH WALL HEIGHT (in) 84	90	96	102	108	
14	80 to 99.5	20	5.3	5.3	5.3	5.3	5.3	-	5.3	5.3	5.3	5.3	5.3	-	5.3	5.3	5.3	5.3	5.3	-
		40	5.3	5.3	5.3	5.3	5.3	-	5.3	5.3	5.3	5.3	5.3	-	5.3	5.3	5.3	5.3	4.0	-
		60	5.3	5.3	5.3	5.3	5.3	-	5.3	5.3	5.3	4.0	4.0	-	5.3	5.3	4.0	4.0	4.0	-
		80	5.3	5.3	5.3	4.0	4.0	-	5.3	4.0	4.0	4.0	4.0	-	4.0	4.0	4.0	4.0	4.0	-
16	80 to 99.5	20	5.3	5.3	5.3	5.3	5.3	-	5.3	5.3	5.3	5.3	5.3	-	5.3	5.3	5.3	5.3	5.3	-
		40	5.3	5.3	5.3	5.3	5.3	-	5.3	5.3	5.3	5.3	5.3	-	5.3	5.3	5.3	5.3	4.0	-
		60	5.3	5.3	5.3	5.3	5.3	-	5.3	5.3	5.3	4.0	4.0	-	5.3	5.3	4.0	4.0	4.0	-
		80	5.3	5.3	5.3	4.0	4.0	-	5.3	5.3	4.0	4.0	4.0	-	4.0	4.0	4.0	4.0	4.0	-
24-32	80 to 99.5	20	5.3	5.3	4.0	4.0	4.0	-	4.0	4.0	4.0	4.0	4.0	-	4.0	4.0	4.0	4.0	4.0	-
		40	5.3	4.0	4.0	4.0	4.0	-	4.0	4.0	4.0	4.0	4.0	-	4.0	4.0	4.0	4.0	-	-
		60	4.0	4.0	4.0	4.0	4.0	-	4.0	4.0	4.0	4.0	-	-	4.0	4.0	-	-	-	-
		80	4.0	4.0	4.0	4.0	4.0	-	4.0	4.0	-	-	-	-	-	-	-	-	-	-

*Pier heights are max. for allowable strap angle. Min. pier height is 20 inches.

DAVID R. KELLER
REGISTERED
No.
8503593
STATE OF
INDIANA
05/26/06
PROFESSIONAL ENGINEER

David R. Keller

PFS #10
Conforms to
HUD MHCSS
6/2/06

Champion

LONGITUDINAL TIE-DOWN : WIND ZONE I & II

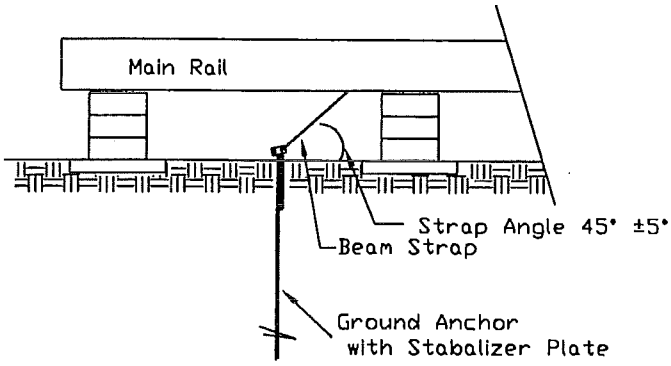

NOTE: 4/12 PITCH LONGITUDINAL TIE-DOWN QUANTITY SEE CURRENT INSTALLATION MANUAL.

MINIMUM LONGITUDINAL TIE-DOWN QUANTITY EACH END OF EACH FLOOR

WIND ZONE	PITCH	5/12			6/12			7/12		
	FLOOR / WALL HEIGHT (in)	12	14	16	12	14	16	12	14	16
I	84	2	2	2	2	2	2	2	2	2
	90	2	2	2	2	2	2	2	2	3
	96	2	2	2	2	2	3	2	2	3
	102	2	2	2	2	2	3	2	2	3
	108	2	2	3	2	2	3	2	2	3
	114	2	2	3	2	2	3	2	2	3
II	84	3	3	4	3	3	4	3	3	4
	90	3	3	4	3	3	4	3	3	4
	96	3	3	4	3	3	4	3	4	4
	102	3	3	4	3	4	4	3	4	4
	108	3	4	4	3	4	4	3	4	4

DAVID R. KELLER
REGISTERED
No.
8503593
STATE OF
05/25/06
INDIANA
PROFESSIONAL ENGINEER

PFS #10
Conforms to
HUD MHCSS
6/2/06

TYPICAL HINGED ROOFS (WIND ZONE I & II)

SECTION "A-A":

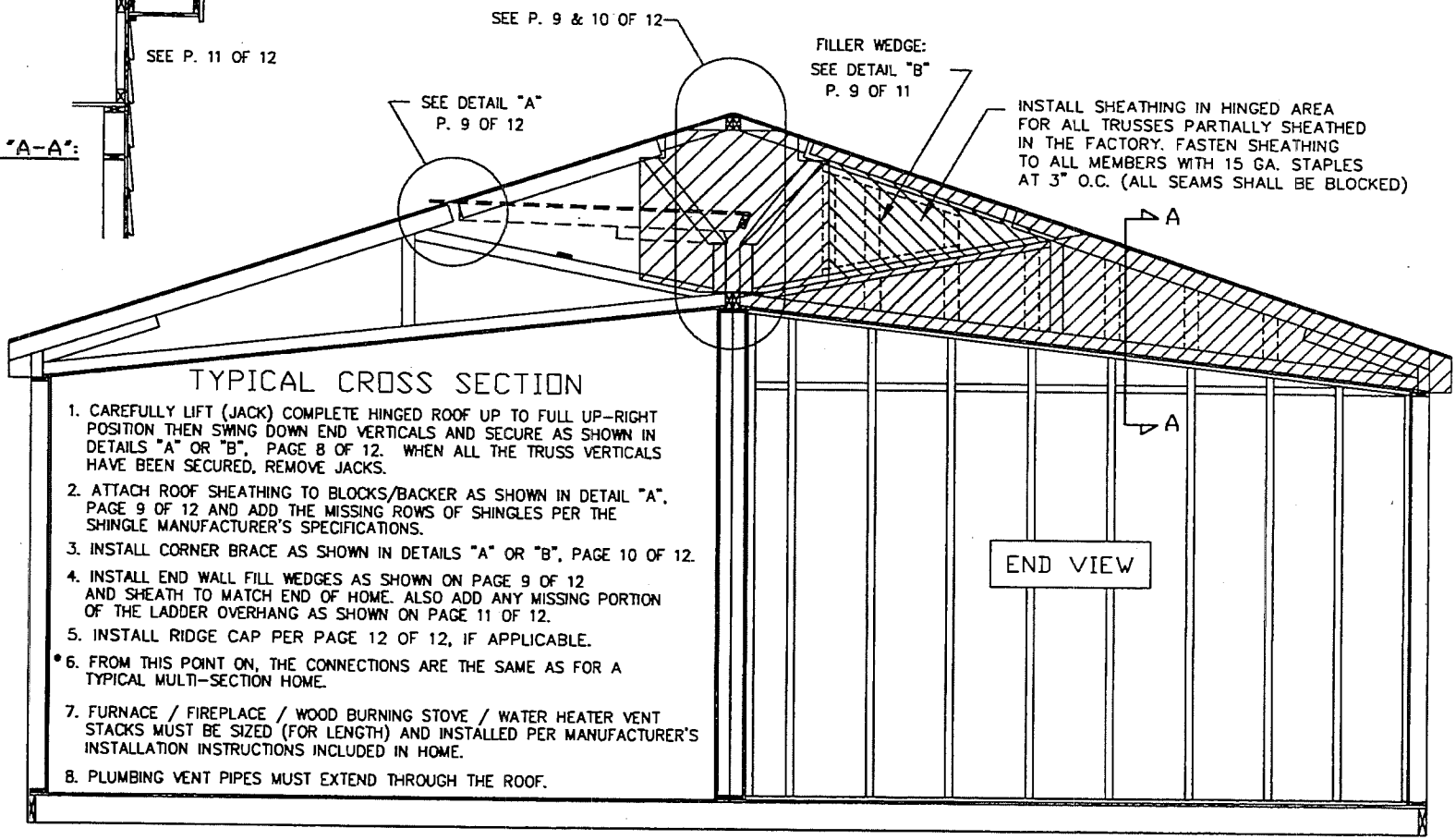

TYPICAL CROSS SECTION

1. CAREFULLY LIFT (JACK) COMPLETE HINGED ROOF UP TO FULL UP-RIGHT POSITION THEN SWING DOWN END VERTICALS AND SECURE AS SHOWN IN DETAILS "A" OR "B", PAGE 8 OF 12. WHEN ALL THE TRUSS VERTICALS HAVE BEEN SECURED, REMOVE JACKS.
2. ATTACH ROOF SHEATHING TO BLOCKS/BACKER AS SHOWN IN DETAIL "A", PAGE 9 OF 12 AND ADD THE MISSING ROWS OF SHINGLES PER THE SHINGLE MANUFACTURER'S SPECIFICATIONS.
3. INSTALL CORNER BRACE AS SHOWN IN DETAILS "A" OR "B", PAGE 10 OF 12.
4. INSTALL END WALL FILL WEDGES AS SHOWN ON PAGE 9 OF 12 AND SHEATH TO MATCH END OF HOME. ALSO ADD ANY MISSING PORTION OF THE LADDER OVERHANG AS SHOWN ON PAGE 11 OF 12.
5. INSTALL RIDGE CAP PER PAGE 12 OF 12, IF APPLICABLE.
6. * FROM THIS POINT ON, THE CONNECTIONS ARE THE SAME AS FOR A TYPICAL MULTI-SECTION HOME.
7. FURNACE / FIREPLACE / WOOD BURNING STOVE / WATER HEATER VENT STACKS MUST BE SIZED (FOR LENGTH) AND INSTALLED PER MANUFACTURER'S INSTALLATION INSTRUCTIONS INCLUDED IN HOME.
8. PLUMBING VENT PIPES MUST EXTEND THROUGH THE ROOF.

* WHEN BLOCKED ROOF DIAPHRAGM IS USED FASTEN ROOF PEAK WITH (4) #8 X 4 1/2" WOOD SCREWS AT 24" O.C. STAGGERED (APPROX. 45° ANGLE). WITH 4/12 ROOF PITCH, ROOF PEAK MAY BE FASTENED WITH (2) #8 X 4 1/2" WOOD SCREWS AT 24" O.C. STAGGERED (APPROX. 45° ANGLE).

DAPIA SEAL	ENGINEER SEAL	MODIFICATIONS	TITLE: ADDENDUM	DRAWING NO.
PFS #10 Conforms to HUD MHCSS 6/2/06	DAVID R. KELLER REGISTERED No. 8503593 STATE OF INDIANA 05/25/04 PROFESSIONAL ENGINEER	B ADD LONGITUDINAL TIES & TRUSS CAP. D.K. 06/16/04 C ADD 4/12 ROOF PITCH. D.K. 06/24/04 D ADD SINGLE VERTICAL DETAIL TO PAGE 9. D.K. 03/09/05 E CHECK SCREWS FOR NDS 2001. D.K. 05/25/06	CROSS SECTION END VIEW DRAWN BY: CEI DATE: 07/23/02 NO SCALE CALC. INDEX NO.:	IN49.057.07E SHEET: 7 OF 12

PROPRIETARY AND CONFIDENTIAL
THESE DRAWINGS AND SPECIFICATIONS ARE ORIGINAL, PROPRIETARY AND CONFIDENTIAL MATERIALS OF CHAMPION.
COPYRIGHT © 1975-2006 BY CHAMPION

CHAMPION

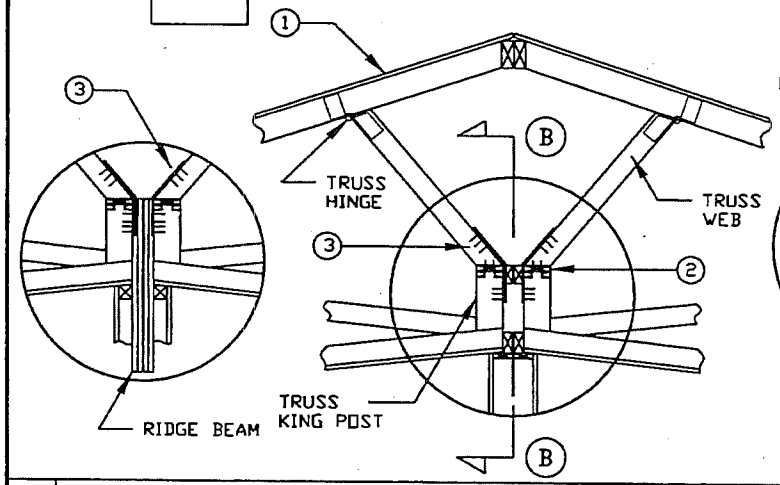

SECTION "B-B":
FIELD SPLICE DETAIL FOR DOUBLED ROOF TRUSSES:

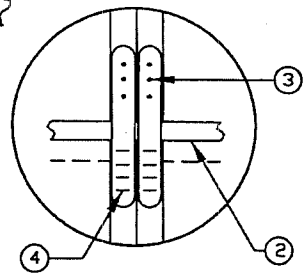

SECTION "B-B":
TRUSS RAIL DETAILS

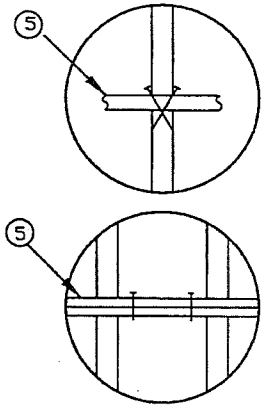

GENERAL NOTES:

1. SHINGLED ROOF CONSTRUCTION WITH HINGED TRUSSES AND SHEATHING.
2. TRUSS RAIL (SINGLE OR DOUBLE).
3. ATTACH THE UPPER END OF EACH UPLIFT STRAP TO TO THE TRUSS WEB DURING THE ROOF SET-UP WITH:
   E ZONE I: EIGHT (8) #8 x 3" WOOD SCREWS PER STRAP.
   ZONE II: SEVEN (7) #8 x 3" WOOD SCREWS PER STRAP.
4. FACTORY INSTALLED UPLFIT STRAP.
5. FASTEN SINGLE TRUSS RAIL TO KING POST WITH: TWO(2) 0.120" dia X 3" NAILS, TOE-NAILED PER TRUSS OR TWO(2) #8x3" WOOD SCREWS, TOE-SCREWED PER TRUSS.
   FASTEN DOUBLE TRUSS RAILS TOGETHER WITH: TWO(2) #8 x 3" WOOD SCREWS OR TWO(2) 0.120" dia X 3" NAILS PER TRUSS BAY.

A HINGED TRUSS UPLIFT CONNECTIONS WITH STEEL STRAPPING

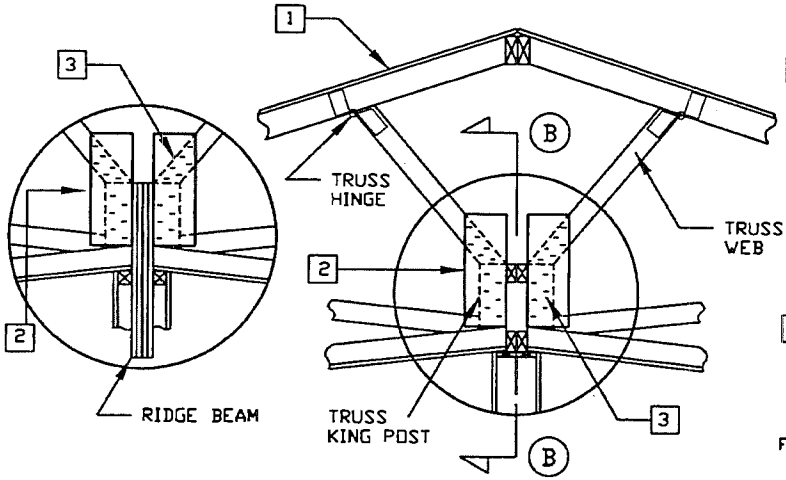

SECTION "B-B":

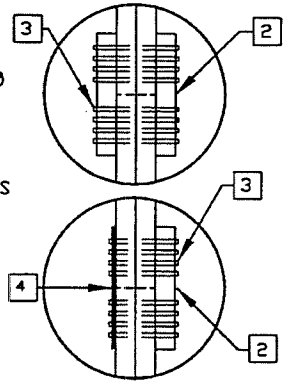

FIELD SPLICE DETAIL FOR DOUBLED ROOF TRUSSES:

GENERAL NOTES:

1. SHINGLED ROOF CONSTRUCTION WITH HINGED TRUSSES AND SHEATHING.
2. ONE(1) 2x6, SPF (MINIMUM) SPLICE BLOCK PER TRUSS.
3. FASTEN FIELD SPLICE BLOCK TO HINGED TRUSS WITH:
   E ZONE I: EIGHT(8) 7/16" x 2-1/2" x 15 GA. STAPLES, OR FIVE (5) #8 x 3" WOOD SCREWS EACH END OF BLOCK.
   E ZONE II: TEN(10) 7/16" x 2-1/2" x 15 GA. STAPLES, OR SIX (6) #8 x 3" WOOD SCREWS EACH END OF BLOCK.
4. ALTERNATE FOR DOUBLED END WALL TRUSSES:
   USE ONE(1) 1.50" x 26 GA. STEEL UPLIFT STRAP IN PLACE OF "OUTER" WOODEN SPLICE BLOCK.
   FASTEN UPLIFT STRAP TO TRUSS KING POST AND TRUSS WEB WITH:
   E ZONE I: EIGHT(8) 7/16" x 1-1/2" x 15 GA. STAPLES, OR SIX (6) #8 x 1-1/2" WOOD SCREWS EACH END OF STRAP.
   E ZONE II: TEN(10) 7/16" x 1-1/2" x 15 GA. STAPLES, OR SEVEN (7) #8 x 1-1/2" WOOD SCREWS EACH END OF STRAP.

B HINGED TRUSS UPLIFT CONNECTIONS WITH SPLICE BLOCKING

DAPIA SEAL

PFS #10 Conforms to HUD MHCSS 6/2/06

ENGINEER SEAL

DAVID R. KELLER REGISTERED No. 8503593 STATE OF INDIANA PROFESSIONAL ENGINEER 05/25/06

MODIFICATIONS

B	ADD LONGITUDINAL TIES & TRUSS CAP.	D.K. 06/16/04
C	ADD 4/12 ROOF PITCH.	D.K. 06/24/04
D	ADD SINGLE VERTICAL DETAIL TO PAGE 9.	D.K. 03/09/05
E	CHECK SCREWS FOR NDS 2001.	D.K. 05/25/06

PROPRIETARY AND CONFIDENTIAL
THESE DRAWINGS AND SPECIFICATIONS ARE ORIGINAL, PROPRIETARY AND CONFIDENTIAL MATERIALS OF CHAMPION.
COPYRIGHT © 1976-2006 BY CHAMPION

TITLE: ADDENDUM
TYPICAL HINGED ROOF
WIND ZONE I & II

DRAWN BY: CEI | DATE: 07/23/02 | NO SCALE

CALC. INDEX NO.:

DRAWING NO. IN49.057.08E

SHEET: 8 OF 12

CHAMPION

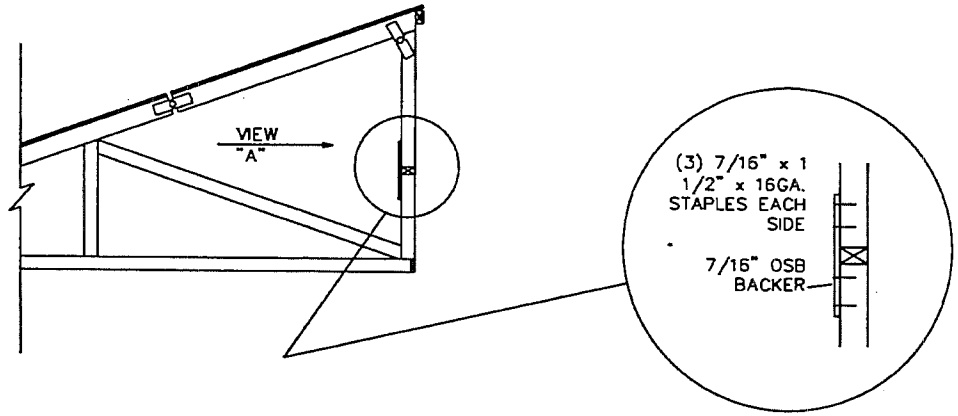

VIEW "A"

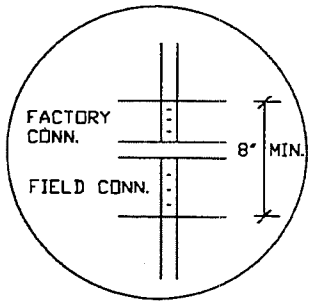

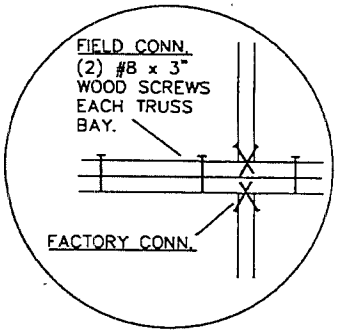

ALTERNATE
(DOUBLE 2x MEMBERS)

A HINGED TRUSS UPLIFT CONNECTIONS WITH OSB OR TOE SCREWS (WIND ZONE I ONLY)

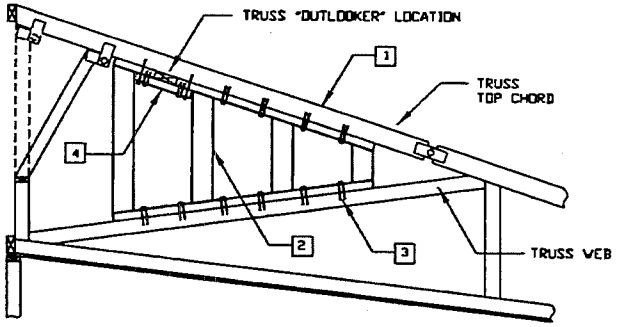

WEDGE DETAIL

GENERAL NOTES:

1. HINGED ROOF TRUSS ABOVE END-WALLS.
2. FILLER WEDGE.
3. FASTEN FILLER WEDGE TO TRUSS TOP CHORD AND TRUSS WEB WITH: 7/16" x 2-1/2 x 15 GA. STAPLES AT 6" O/C.
4. AT OPTIONAL TRUSS "OUTLOOKER" LOCATIONS: FASTEN FILLER WEDGE AT SPLICE LOCATION TO ROOF TRUSS WITH: #8 x 4" WOOD SCREWS AT 6" O/C.
5. (D) SINGLE VERTICALS FASTENED EACH END WITH (2) 0.131 X 3" TOE NAILS.
6. FILLER WEDGE VERTICALS OR SINGLE VERTICALS OVER 60" IN LENGTH WIND ZONE I, 42" IN LENGTH WIND ZONE II SHALL BE LATERALLY BRACED.

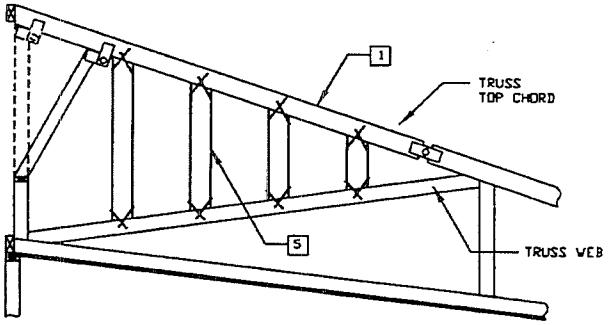

(D) SINGLE VERTICAL DETAIL

B END FILL DETAIL

DAPIA SEAL

PFS #10 Conforms to HUD MHCSS 6/2/06

ENGINEER SEAL

DAVID R. KELLER REGISTERED No. 8503593 STATE OF INDIANA PROFESSIONAL ENGINEER

MODIFICATIONS

(B)	ADD LONGITUDINAL TIES & TRUSS CAP.	D.K. 06/16/04
(C)	ADD 4/12 ROOF PITCH.	D.K. 06/24/04
(D)	ADD SINGLE VERTICAL DETAIL TO PAGE 9.	D.K. 03/09/05
(E)	CHECK SCREWS FOR NDS 2001.	D.K. 05/25/06

PROPRIETARY AND CONFIDENTIAL
THESE DRAWINGS AND SPECIFICATIONS ARE ORIGINAL, PROPRIETARY AND CONFIDENTIAL MATERIALS OF CHAMPION.
COPYRIGHT © 1976-2006 BY CHAMPION

TITLE: ADDENDUM
TYPICAL HINGED ROOFS (WIND ZONES I & II)

DRAWN BY: CEI | DATE: 07/23/02 | NO SCALE

CALC. INDEX NO.:

DRAWING NO. IN49.057.09E

SHEET: 9 OF 12

CHAMPION

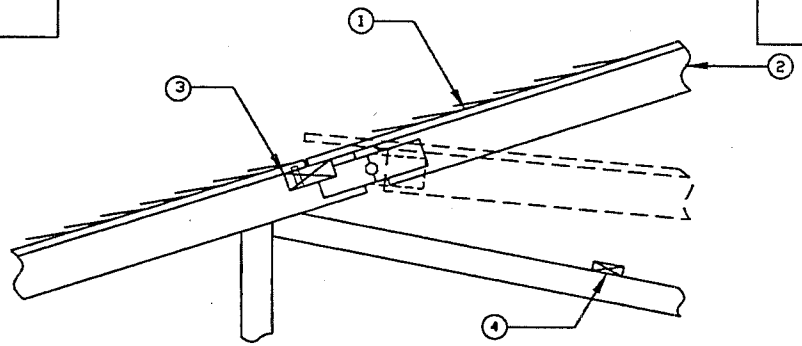

NOTES:

1. SHINGLED ROOF CONSTRUCTION WITH HINGED TRUSSES AND SHEATHING.
2. HINGED ROOF TRUSS.
3. IF 2X BLOCKING ALONG HINGED DECKING SEAM IS FACTORY PROVIDED FASTEN ROOF SHEATHING TO SEAM BLOCKING WITH: 15 GA. STAPLES WITH 1" MIN. PENETRATION AT 4" O/C.

   OR

   IF 19/32" OSB BACKER ALONG HINGED DECKING SEAMS IS FACTORY PROVIDED FASTEN ROOF SHEATHING TO SEAM BACKER WITH: 15 GA. STAPLES WITH .59" MIN. PENETRATION. AT 2 1/2" O/C.
4. LATERAL TRUSS BRACE.

A HINGED TRUSS: ROOF (WOOD) DIAPHRAGM BLOCKING DETAILS

NOTES:

1. LISTED HINGED ROOF TRUSS.
2. FASTEN DIAGONAL BRACE NAILING BOARDS TO TRUSS RAILS WITH FOUR(4) #8 X 2" WOOD SCREWS PER BOARD.
3. 2x3, SPF (MINIMUM) VERTICAL TRUSS BLOCKING OR VERTICAL TRUSS "SWING-LEG" ABOVE KING POST.

   NOTE: PLACE AS MANY VERTICAL TRUSS BLOCKS AS REQUIRED BY THE TRUSS GEOMETRY.
4. FASTEN 2X3 SPF (MINIMUM) DIAGONAL BRACE FROM THE TOP OF THE END WALL TRUSS, AT APPROXIMATELY A 45° ANGLE TO KEEP THE TRUSSES UPRIGHT, WITH FOUR(4) #8 X 2" WOOD SCREWS AT EACH END TO NAILING BOARDS.

   OR

   TWO(2) #8 X 3" WOOD SCREWS PER VERTICAL TRUSS BLOCK OR "SWING-LEG".

   NOTE: CORNER BRACING IS NOT REQUIRED WHEN A RIDGE BEAM IS LOCATED WITHIN TWO FEET FROM THE END OF THE HOME.

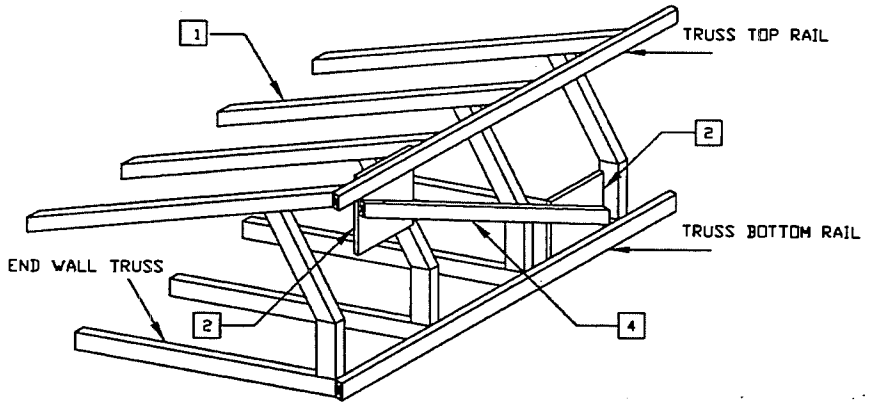

B FIELD INSTALLED CORNER BRACING FASTENED TO "NAILER BOARDS"

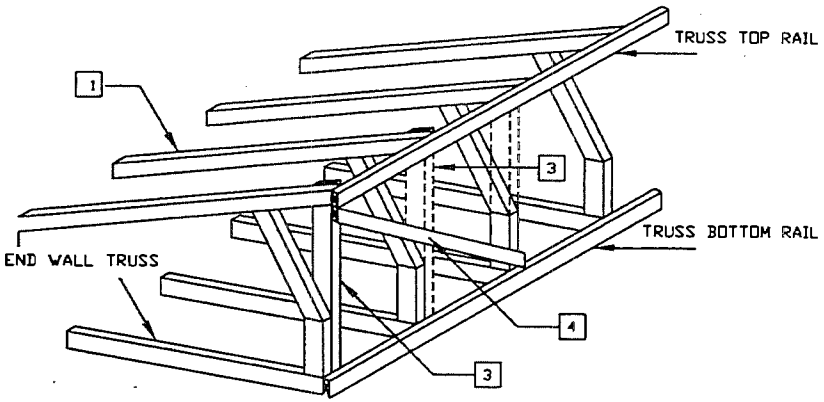

C FIELD INSTALLED CORNER BRACING TO VERTICAL POSTS

DAPIA SEAL

PFS #10 Conforms to HUD MHCSS 6/2/06

ENGINEER SEAL

DAVID R. KELLER REGISTERED No. 8503593 STATE OF INDIANA PROFESSIONAL ENGINEER

MODIFICATIONS

B	ADD LONGITUDINAL TIES & TRUSS CAP.	D.K. 06/16/04
C	ADD 4/12 ROOF PITCH.	D.K. 06/24/04
D	ADD SINGLE VERTICAL DETAIL TO PAGE 9.	D.K. 03/09/05
E	CHECK SCREWS FOR NDS 2001.	D.K. 05/25/06

PROPRIETARY AND CONFIDENTIAL
THESE DRAWINGS AND SPECIFICATIONS ARE ORIGINAL, PROPRIETARY AND CONFIDENTIAL MATERIALS OF CHAMPION.
COPYRIGHT © 1976-2006 BY CHAMPION

TITLE: ADDENDUM
TYPICAL HINGED ROOFS (WIND ZONES I & II)

DRAWN BY: CEI | DATE: 07/23/02 | NO SCALE

CALC. INDEX NO.:

DRAWING NO. IN49.057.10E

SHEET: 10 OF 12

CHAMPION

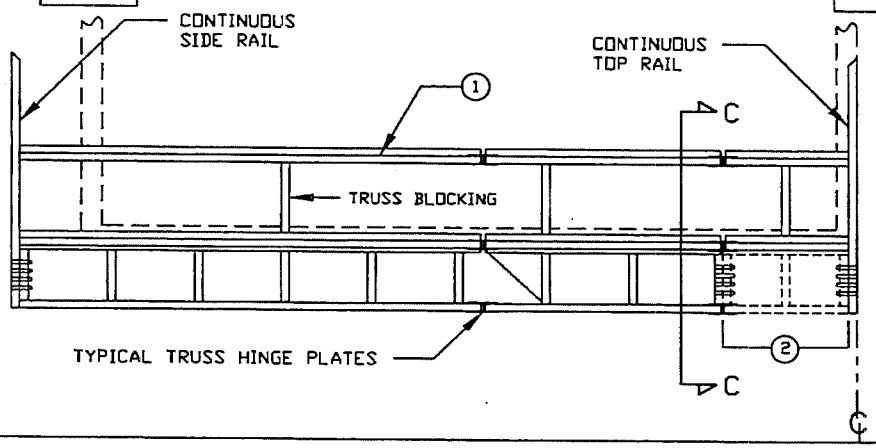

GENERAL NOTES:

1. HINGED ROOF TRUSS WITH LADDER OVERHANG ASSEMBLY.
2. FOR "DOUBLE HINGE" TRUSS OPTION. THIS PORTION OF THE EAVE OVERHANG SHALL BE INSTALLED IN THE FIELD.

FASTEN EAVE OVERHANG BLOCKING TO CONTINUOUS EDGE (SIDE AND TOP) RAILS WITH FOUR(4):
7/16" x 2-1/2" x 15 GA. STAPLES, OR
0.131" x 3" NAILS OR #8 x 3" WOOD SCREWS.

NOTE: SEE DETAIL "B" BELOW, FOR REQUIRED FASTENING SCHEDULE OF THE FIELD INSTALLED PORTION OF A DOUBLE-HINGED ROOF TRUSS LADDER OVERHANG (RE: SECTION "C-C").

A TYPICAL LADDER END WALL OVERHANG (TOP VIEW)

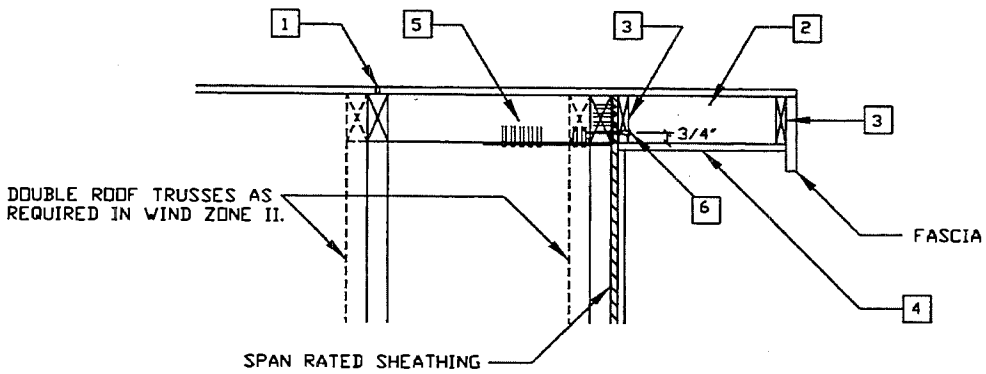

SECTION "C-C":

GENERAL NOTES:

1. ROOF SHEATHING.
   NOTE: THE FIRST SEAM IN THE ROOF SHEATHING SHALL BE LOCATED 16" (MIN.) FROM THE END WALL.
2. 2x4 OVERHANG BLOCKING AT 16" O/C.
3. FASTEN 1X4 EAVE OVERHANG RAILS TO OVERHANG BLOCKING WITH:
   THREE(3) - 7/16" x 2" x 15 GA. STAPLES INTO EACH END OF BLOCKING.
4. FASTEN (3/8" (MIN.) SHEATHING AS SOFFIT MATERIAL, TO ALL FRAMING MEMBERS WITH:
   ZONE I: 7/16" x 1-1/2" x 15 GA. STAPLES AT 6" O/C.
   ZONE II: 7/16" x 1-1/2" x 15 GA. STAPLES AT 4" O/C.
5. 2x4, SPF (MIN.) TRUSS BLOCKING AT 48" O/C.
   FOR WIND ZONE II ONLY: STRAP BLOCKING TO ENDWALL TRUSSES WITH 1.50" x 26 GA. STEEL STRAPPING. FASTEN WITH TEN(10) 7/16" x 1-1/2" x 15 GA. STAPLES INTO EACH END OF STRAP.
6. ATTACH THE END WALL OVERHANG TO THE END WALL TRUSS TOP CHORD WITH:
   #8 x 3" WOOD SCREWS SPACED AT 8" O/C (MAX.).

B FIELD INSTALLED PORTION OF LADDER END WALL OVERHANG (SIDE VIEW)

DAPIA SEAL

PFS #10 Conforms to HUD MHCSS 6/2/06

ENGINEER SEAL

DAVID R. KELLER REGISTERED No. 8503593 STATE OF INDIANA PROFESSIONAL ENGINEER 07/25/06

MODIFICATIONS

B	ADD LONGITUDINAL TIES & TRUSS CAP.	D.K. 06/16/04
C	ADD 4/12 ROOF PITCH.	D.K. 06/24/04
D	ADD SINGLE VERTICAL DETAIL TO PAGE 9.	D.K. 03/09/05
E	CHECK SCREWS FOR NDS 2001.	D.K. 05/25/06

PROPRIETARY AND CONFIDENTIAL
THESE DRAWINGS AND SPECIFICATIONS ARE ORIGINAL, PROPRIETARY AND CONFIDENTIAL MATERIALS OF CHAMPION.
COPYRIGHT © 1978-2006 BY CHAMPION

TITLE: ADDENDUM
TYPICAL HINGED ROOFS (WIND ZONES I & II)

DRAWING NO. IN49.057.11E

SHEET: 11 OF 12

DRAWN BY: CEI | DATE: 07/23/02 | NO SCALE

CALC. INDEX NO.:

CHAMPION

PURCHASED RIDGE CAP ASSEMBLY:

1. ALL PURCHASED RIDGE CAP COMPONENTS SHALL BE LISTED FOR APPLICABLE LIVE AND DEAD LOADS, AND BE SPACED NOT TO EXCEED THEIR LISTING REQUIREMENTS.
2. RIDGE CAP FRAMING SHALL BE SPACED:
   FOR LIVE LOAD = 40 PSF (MAX.) AT 24" O/C.
   FOR LIVE LOAD = 80 PSF (MAX.) AT 16" O/C.
3. FOR ROOF LIVE LOAD = 80 PSF (MAX.):
   USE #8 x 3" WOOD SCREWS AT 9" O/C. (E)

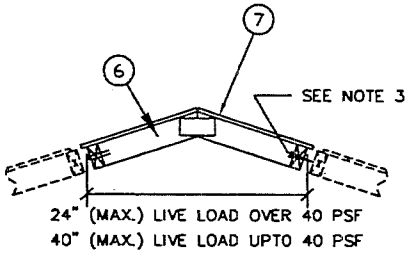

GENERAL NOTES:

1. TYPICAL SHINGLED ROOF CONSTRUCTION WITH HINGED TRUSSES AND SPAN RATED SHEATHING.
2. TYPICAL 2x4, SPF (MINIMUM) TRUSS TOP RAIL.
3. 2x6, #3 SPF (MINIMUM) RIDGE CAP BLOCKING.
   ROOF LIVE LOAD = 30 PSF FOR BLOCKING AT 24" O/C.
   ROOF LIVE LOAD = 40 PSF FOR BLOCKING AT 16" O/C.
4. 2x3, SPF (MINIMUM) RIDGE CAP BLOCKING SIDE RAILS.
   FASTEN RAILS TO RIDGE CAP WITH:
   THREE(3) 7/16" x 2-1/2" x 15 GA. STAPLES INTO EACH END OF CAP BLOCKING.
5. 1x3, SPF (MINIMUM) UPPER CAP BLOCKING RAILS.
   FASTEN RAILS TO RIDGE CAP WITH:
   THREE (3) 7/16" x 1-3/4" x 16 GA. STAPLES PER CONNECTION.
6. ALTERNATE: PURCHASED RIDGE CAP ASSEMBLY.
7. FASTEN SPAN RATED SHEATHING TO ALL RIDGE CAP FRAMING MEMBERS WITH:
   7/16" x 1-1/2" x 15 GA. STAPLES AT 6" O/C.
   (AND AT 4" O.C. WITHIN 3'-0" OF HOME ENDS, WIND ZONE II ONLY.)

A | OPTIONAL LISTED TRUSS RIDGE CAP

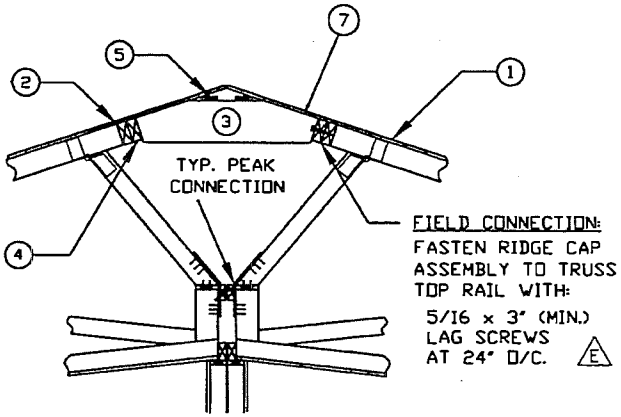

NOTE:
1. MAXIMUM ROOF LIVE LOAD = 40 PSF.
2. DOUBLE BLOCKING REQUIRED WITHIN 3'-0" OF HOME ENDS, WIND ZONE II ONLY.

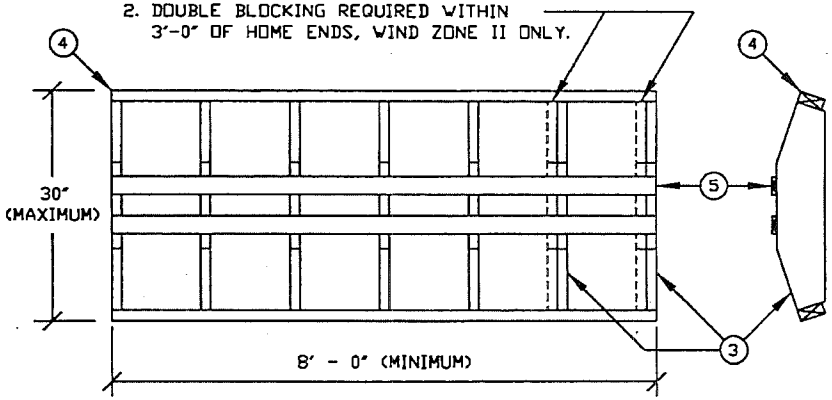

B | OPTIONAL TRUSS RIDGE CAP DETAILS

DAPIA SEAL

PFS #10 Conforms to HUD MHCSS 6/2/06

ENGINEER SEAL

DAVID R. KELLER REGISTERED No. 8503593 STATE OF INDIANA PROFESSIONAL ENGINEER

MODIFICATIONS

(B)	ADD LONGITUDINAL TIES & TRUSS CAP.	D.K. 06/16/04
(C)	ADD 4/12 ROOF PITCH.	D.K. 06/24/04
(D)	ADD SINGLE VERTICAL DETAIL TO PAGE 9.	D.K. 03/09/05
(E)	REVISE SCREWS FOR NDS 2001.	D.K. 05/25/06

PROPRIETARY AND CONFIDENTIAL
THESE DRAWINGS AND SPECIFICATIONS ARE ORIGINAL, PROPRIETARY AND CONFIDENTIAL MATERIALS OF CHAMPION.
COPYRIGHT © 1976-2006 BY CHAMPION

TITLE: ADDENDUM
HINGED ROOFS (WIND ZONES I & II)

DRAWN BY: CEI | DATE: 07/23/02 | NO SCALE

CALC. INDEX NO.:

DRAWING NO. IN49.057.12E

SHEET: 12 OF 12

CHAMPION

CHAMPION

Setup and Installation Addendum

for

Three Piece Dormer

(40 psf Roof Live Load Maximum)

(Wind Zone I - 7/12 Pitch Maximum)

PFS #10 ®
Conforms to
HUD MHCSS
7/18/06

SET-UP INSTRUCTIONS

1. SET MODULE "A" ON RAISED MAIN ROOF. SET DORMER RIDGE OVER OUTSIDE EDGE OF DOUBLE TRUSS (SEE SECTION B-B).
2. FASTEN MODULE "A" TO MAIN ROOF USING #8 WOOD SCREWS WITH A 1¼" MINIMUM PENETRATION INTO MAIN ROOF TRUSSES. PLACE SCREWS INTO EACH TRUSS ALONG VALLEY AND ACROSS FRONT DORMER FRAME ALSO SCREW ALONG ROOF LINE BELOW RIDGE INTO DOUBLE TRUSS AT 6" O.C. PER SECTION B-B.
3. SET MODULE "B" IN POSITION BESIDE MODULE "A".
4. FASTEN MODULE "B" TO MAIN ROOF USING #8 WOOD SCREWS WITH 1¼" MINIMUM PENETRATION INTO MAIN ROOF TRUSSES. PLACE SCREWS INTO EACH TRUSS ALONG VALLEY AND ACROSS FRONT OF DORMER FRAME.
5. CONNECT TWO MODULES AT RIDGE PER TYPICAL DOUBLE WIDE CONNECTION.
6. SET MODULE "C" IN POSITION IN FRONT OF TWO PIECE DORMER.
7. FASTEN MODULE "C" TO MAIN ROOF USING #8 WOOD SCREWS WITH A 1¼" MINIMUM PENETRATION INTO MAIN ROOF TRUSSES. PLACE SCREWS INTO EACH TRUSS ALONG VALLEY AND ACROSS FRONT DORMER FRAME. TOE SCREW UPPER CHORD OF INSIDE TRUSS OF MODULE "C" TO EACH CROSSING VERTICAL OF MODULES "A" AND "B".
8. FINISH SHINGLES AT RIDGE AND VALLEYS PER ARMA SPECIFICATIONS.
9. ATTACH EXTERIOR SIDING PER MANUFACTURER INSTRUCTIONS.
10. PRE-FABRICATED MAIN DORMER KITS REQUIRE #8 SCREWS AT EACH ROOF TRUSS ALONG VALLEYS AND ACROSS FRONT (1¼" PENETRATION).

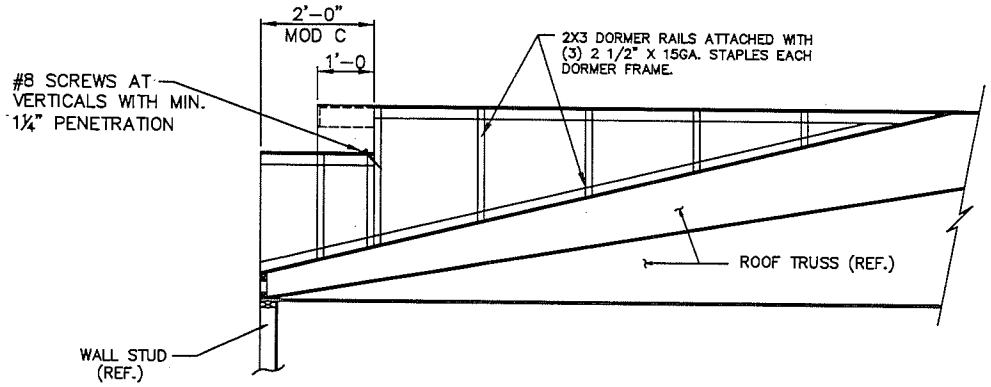

SECTION A-A

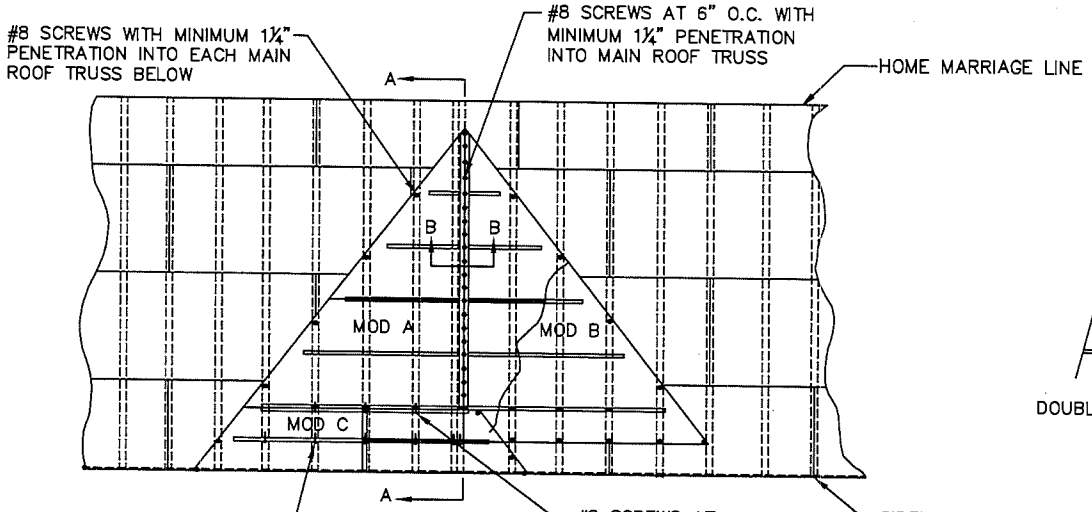

PLAN VIEW

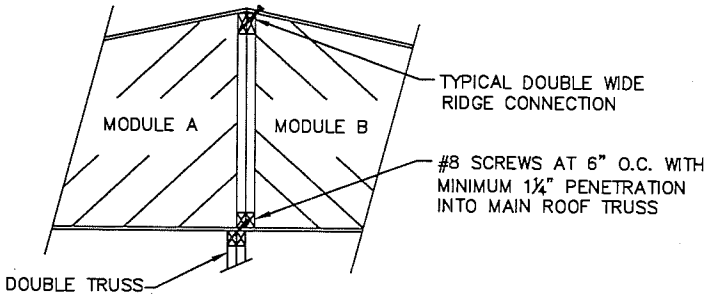

SECTION B-B

DAPIA SEAL	ENGINEER SEAL	MODIFICATIONS	TITLE: ADDENDUM THREE PIECE DORMER	DRAWING NO. IN49.361.02
PFS #10 Conforms to HUD MHCSS 7/18/06		A	DRAWN BY: CEI / DATE: 6/12/02 / NO SCALE	SHEET: 2 OF 3
			CALC. INDEX NO.: R-373A, R-374	

PROPRIETARY AND CONFIDENTIAL
THESE DRAWINGS AND SPECIFICATIONS ARE ORIGINAL, PROPRIETARY AND CONFIDENTIAL MATERIALS OF CHAMPION.
COPYRIGHT © 1976-2006 BY CHAMPION

CHAMPION

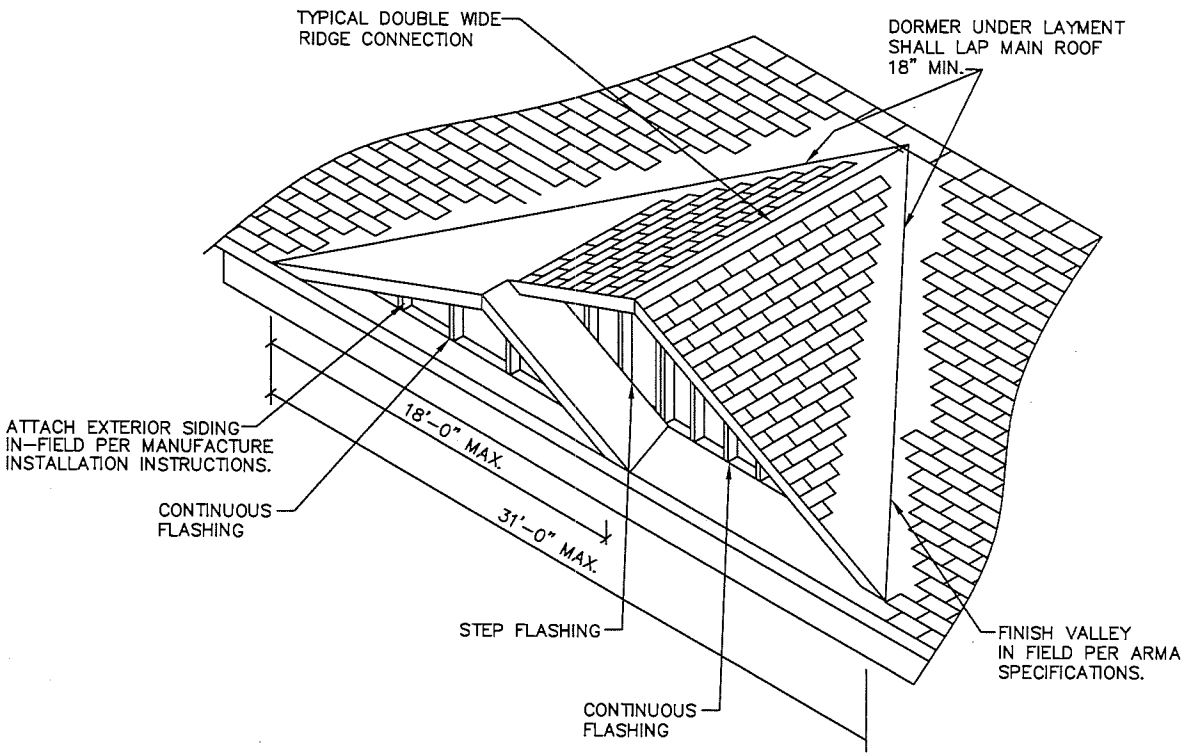

DAPIA SEAL	ENGINEER SEAL	MODIFICATIONS	TITLE: ADDENDUM THREE PIECE DORMER	DRAWING NO. IN49.361.03
PFS #10 Conforms to HUD MHCSS 7/18/06		A	DRAWN BY: CEI / DATE: 6/12/02 / NO SCALE	SHEET: 3 OF 3
			CALC. INDEX NO.: R-373A, R-374	

PROPRIETARY AND CONFIDENTIAL
THESE DRAWINGS AND SPECIFICATIONS ARE ORIGINAL, PROPRIETARY AND CONFIDENTIAL MATERIALS OF CHAMPION.
COPYRIGHT © 1976-2006 BY CHAMPION

CHAMPION

CHAMPION

PFS #10 ®
Conforms to
HUD MHCSS
5/18/06

Installation Manual Addendum

for

MHCSS 3280 Rule Changes

(For Homes Starting Production On or After May 30, 2006)

PROPRIETARY AND CONFIDENTIAL
THESE DRAWINGS AND SPECIFICATIONS ARE ORIGINAL,
PROPRIETARY AND CONFIDENTIAL MATERIALS OF CHAMPION.
COPYRIGHT © 1976-2006 BY CHAMPION

Roof Load Zones (Figure 3.1)

CHAMPION

North Roof Load Zone

The following areas of local governments listed by state (counties or similar areas, unless otherwise specified) are within the north roof load zone areas.

Maine

Aroostook, Hancock, Knox, Penobscot, Piscataquis, Somerset, Waldo, Washington

The following states are within the north roof load zone areas.

State of Alaska

Middle Roof Load Zone

The following areas of local governments listed by state (counties or similar areas, unless otherwise specified) are within the middle roof load zone areas.

Iowa

Buena Vista, Butler, Calhoun, Cerro Gordo, Cherokee, Chickasaw, Clay, Dickinson, Emmet, Floyd, Franklin, Hamilton, Hancock, Hardin, Howard, Humboldt, Ida, Kossuth, Lyon, Mitchell, O'Brien, Osceola, Palo Alto, Plymouth, Pocahontas, Sac, Sioux, Webster, Winnebago, Worth, Wright

Maine

Androscoggin, Cumberland, Franklin, Kennebec, Lincoln, Oxford, Sagadahoc, York

Massachusetts

Essex

Michigan

Alcona, Alger, Alpena, Antrim, Baraga, Benzie, Charlevoix, Cheyboygan, Chippewa, Crawford, Delta, Dickinson, Emmet, Keweenaw, Gogebic, Grand Traverse, Houghton, Iron, Kalkaska, Leelanau, Luce, Mackinac, Marquette, Menominee, Missaukee, Montmorency, Ogemaw, Ontonagon, Oscoda, Otsego, Presque Isle, Roscommon, Schoolcraft, Wexford

Minnesota

Aitkin, Anoka, Benton, Blue Earth, Brown, Carlton, Carver, Cass, Chippewa, Chisapo, Cook, Cotton Wood, Crow Wing, Dakota, Dodge, Douglas, Faribault, Fillmore, Freeborn, Goodhue, Grant, Hennepin, Hubbard, Isanti, Itasca, Jackson, Kanabec, Kandiyohi, Koochiching, Lac qui Parle, Lake, Le Sueur, Lincoln, Lyon, Martin, McLeod, Meeker, Mille Lacs, Morrison, Mower, Murray, Nobles, Nicollet, Olmsted, Pine, Pipestone, Pope, Ramsey, Redwood, Renville, Rice, Rock, Scott, Sherburne, Sibley, St. Louis, Steams, Steele, Stevens, Swift, Todd, Wabasha, Wadena, Waseca, Washington, Watonwan, Winona, Wright, Yellow Medicine

New York

Cayuga, Clinton, Erie, Essex, Franklin, Fulton, Genesee, Hamilton, Herkimer, Jefferson, Lewis, Livingston, Madison, Monroe, Montgomery, Niagara, Oneida, Onondage, Ontario, Orleans, Oswego, Saratoga, Schenectady, Seneca, St. Lawrence, Warren, Washington, Wayne, Wyoming, Yates

South Dokota

Brookings, Clay, Codington, Deuel, Grant, Hamlin, Hanson, Hutchinson, Kingsbury, Lake, Lincoln, McCook, Miner, Minnehaha, Moody, Turner, Union, Yankton

Vermont

Addison, Caledonia, Chittendon, Essex, Franklin, Grand Isle, Lamoille, Orange, Orleans, Rutland, Washington, Windsor

Wisconsin

Ashland, Barron, Bayfield, Buffalo, Burnett, Chippewa, Clark, Door, Douglas, Dunn, Eau Claire, Florence, Forest, Iron, Jackson, Langlade, Lincoln, Marathon, Marinette, Menominee, Oconto, Oneida, Pepin, Pierce, Polk, Price, Rusk, St Croix, Sawyer, Taylor, Trempealeau, Vilas, Washburn

The following states are within the middle roof load zone areas.

State of Colorado, State of Idaho, State of Montana, State of New Hampshire, State of Utah, State of Wyoming

South Roof Load Zone

The states and counties that are not listed as being in North or Middle roof load zones.

Homes designed and constructed for Humid and Fringe Climate shall be sited as shown below.

Champion

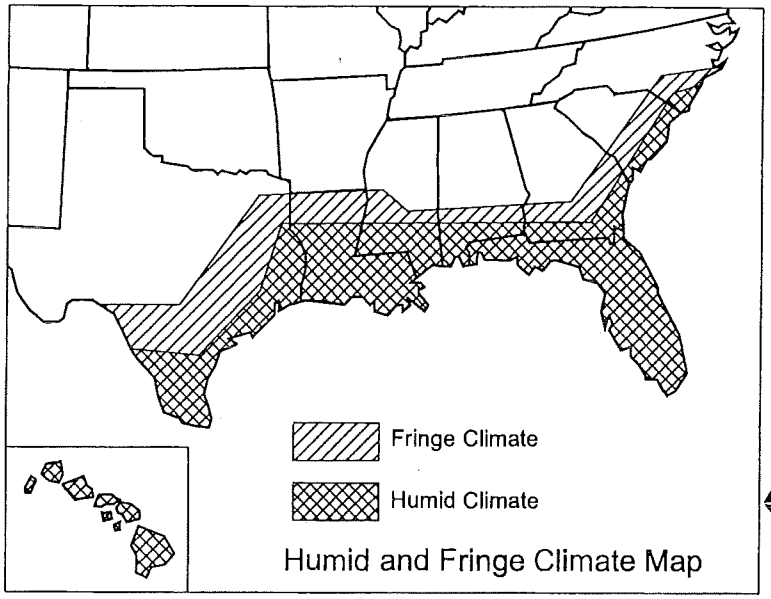

Humid and Fringe Climate Map

PFS #10 ®
Conforms to HUD MHCSS 5/18/06

Humid and Fringe Climate Areas

The following areas of local governments listed by state (counties or similar areas, unless otherwise specified) are within the humid and fringe climate areas.

Alabama

Baldwin
Barbour
Bulluck
Butler
Choctaw
Clarke
Coffee
Conecuh
Covington
Crenshaw
Dale
Escambia
Geneva
Henry
Huston
Lowndes
Marengo
Mobile
Monroe
Montgomery
Pike
Washington
Wilcox

Georgia

Appling
Atkinson
Bacon
Baker
Ben Hill
Berrien
Brantley
Brooks
Bryan
Calhoun
Camden
Charlton
Chatham
Clay
Clinch
Coffee
Colquitt
Cook
Crisp
Decatur
Dougherty
Early
Echols
Effingham
Evans
Glynn
Wayne
Grady
Irwin
Jeff Davis
Lanier
Lee
Liberty
Long
Lowndes
McIntosh
Miller
Mitchell
Pierce
Quitman
Randolph
Seminole
Tattnall
Terrell
Thomas
Tift
Turner
Ware
Worth

Mississippi

Adams
Amite
Claiborne
Clarke
Copiah
Covington
Forrest
Franklin
George
Greene
Hancock
Harrison
Hinds
Issaquena
Jackson
Jasper
Jefferson
Jefferson Davis
Jones
Lamar
Lawrence
Lincoln
Marion
Pearl River
Perry
Pike
Rankin
Simpson
Smith
Stone
Walthall
Warren
Wayne
Wilkinson

North Carolina

Brunswick
Carteret
Columbus
New Hanover
Onslow
Pender

South Carolina

Beaufort
Berkeley
Charleston
Colleton
Dorchester
Georgetown
Horry
Jasper

Texas

Anderson
Angelina
Aransas
Atascosa
Austin
Bastrop
Bee
Bexar
Brazoria
Brazos
Brooks
Burleson
Caldwell
Calhoun
Cameron
Camp
Cass
Chambers
Cherokee
Colorado
Comal
De Witt
Dimmit
Duval
Falls
Fayette
Fort Bend
Franklin
Freestone
Frio
Galveston
Goliad
Gonzales
Gregg
Grimes
Guadalupe
Hardin
Harris
Harrison
Hays
Henderson
Hidalgo
Hopkins
Huston
Jackson
Jasper
Jefferson
Jim Hogg
Jim Wells
Karnes
Kaufman
Kennedy
Kinney
Kleberg
La Salle
Lavaca
Lee
Leon
Liberty
Limestone
Live Oak
Madison
Marion
Matagorda
Maverick
McMullen
Medina
Milam
Montgomery
Morris
Nacogdoches
Navarro
Newton
Nueces
Orange
Panola
Polk
Rains
Refugio
Robertson
Rusk
Sabine
San Augustine
San Jacinto
San Patricio
Shelby
Smith
Starr
Titus
Travis
Trinity
Tyler
Upshur
Uvalde
Val Verde
Van Zandt
Victoria
Walker
Waller
Washington
Webb
Wharton
Willacy
Williamson
Wilson
Wood
Zapata
Zavala

The following states and territories are within the humid and fringe climate areas.

State of Florida
State of Hawaii
State of Louisiana
U.S. Territory of Puerto Rico

PFS #10 Conforms to HUD MHCSS 5/18/06

CHAMPION

Figure 5.4

MULTI-SECTION FLOOR CONNECTION

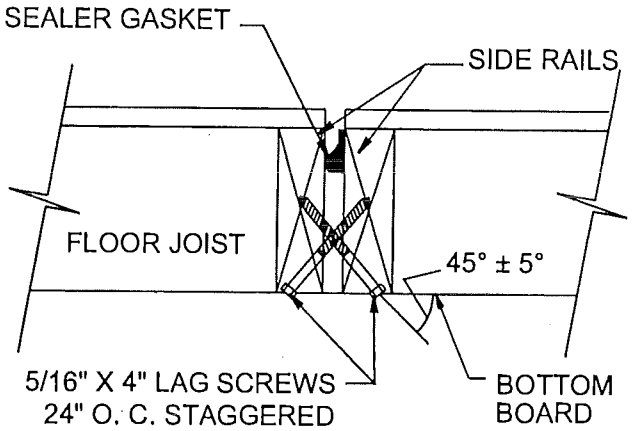

Figure 5.6

MULTI-SECTION ROOF CONNECTION

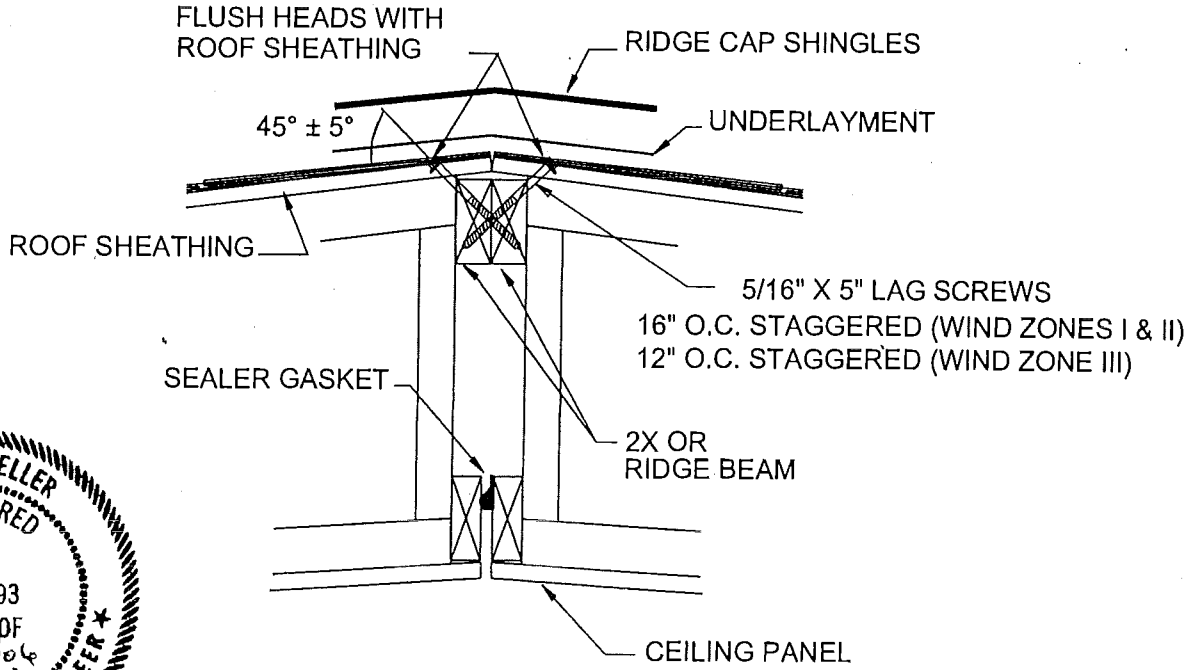

DAVID R. KELLER
REGISTERED
No.
8503593
STATE OF
INDIANA
05/03/06
PROFESSIONAL ENGINEER

PFS #10 Conforms to HUD MHCSS 5/18/06

Champion

FIGURE 5.8
TAG TRIPLE WIDE CONNECTION
(WIND ZONE I ONLY)

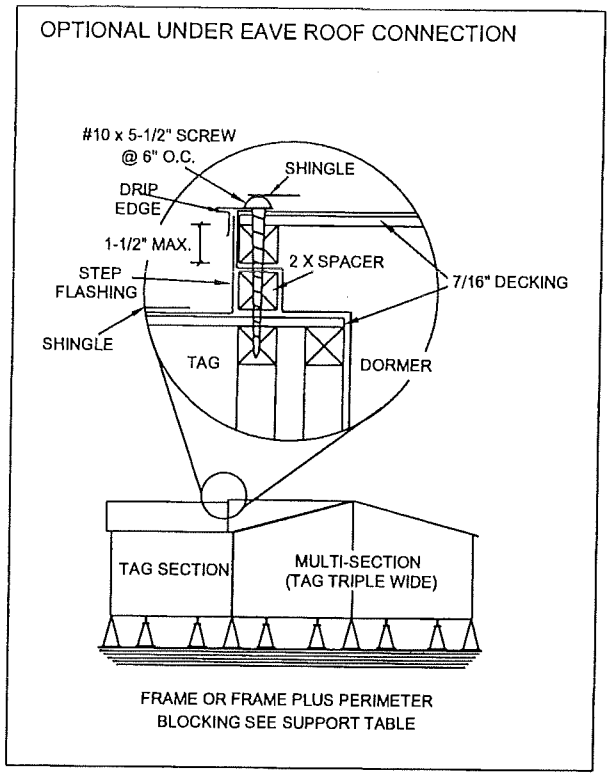

FIGURE 5.9
FULL TRIPLE WIDE CONNECTION
(WIND ZONE I ONLY)

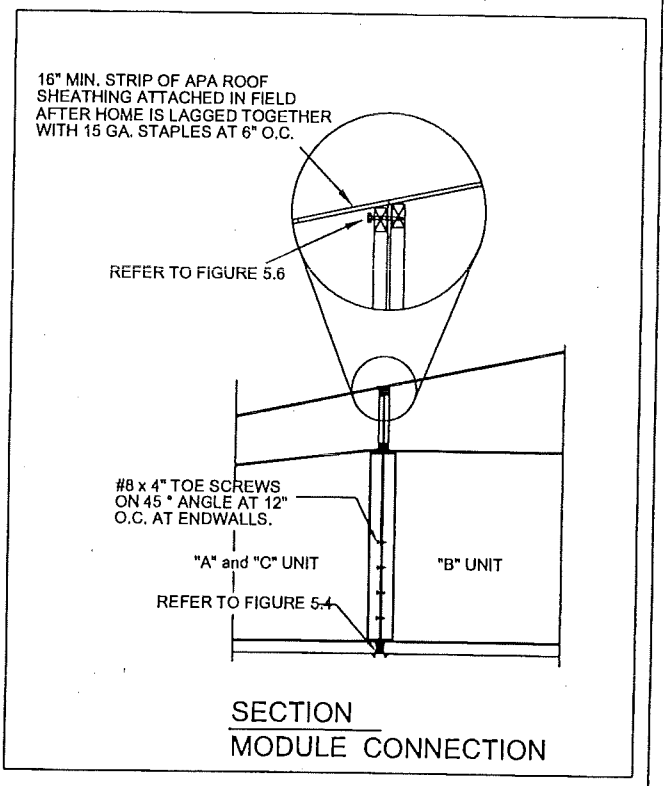

FIGURE 6.4
CONTINUOUS RIDGE VENT

FASTEN RIDGE RAIL TOGETHER WITH (2) 5/16" x 5" LAG SCREWS AT 24" o.c. STAGGERED FROM SECTION TO SECTION FOR THE ENTIRE LENGTH. (Screws must be located at ridge blocking.)

INSTALLI SCREWS AT 45 DEGREE ANGLE STARTING 3" FROM THE END AND 2-1/2" FROM CENTER OF DOUBLE SECTION. (FLUSH HEADS WITH ROOF SHEATHING.)

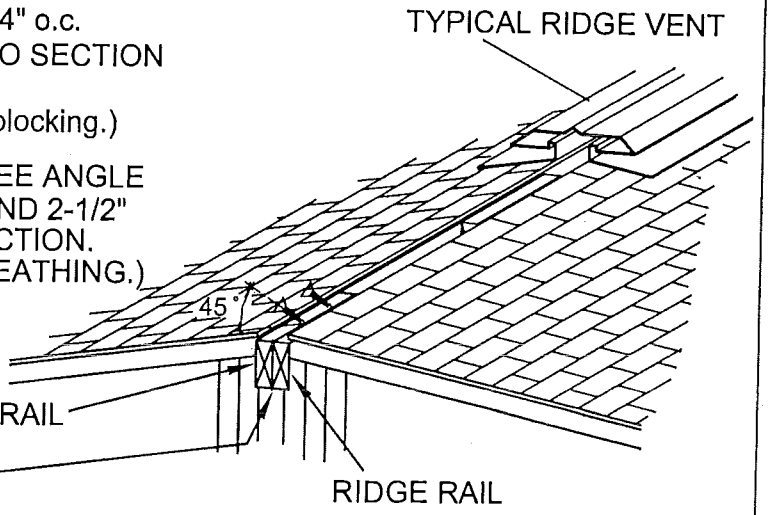

APPROVED
PFS Corporation
Dallas TX – 2
8/17/04
HUD Manufactured Home Construction & Safety Standard

Champion

Set-Up and Installation Addendum for HIGH-EFFICIENCY GAS FURNACES: VERTICAL VENT TERMINATION

GENERAL NOTES:

1. THE COMBUSTION INTAKE AND EXHAUST VENT SHALL BE INSTALLED IN THE PLANT (INCLUDING FLASHING) AND MUST EXTEND ABOVE THE ROOF.
2. FOR HINGED ROOFS, THE COMBUSTION INTAKE AND EXHAUST VENT SHALL BE LOCATED OUTSIDE THE HINGED PORTION OF THE ROOF. WHEN THE TRANSPORTATION HEIGHT HAS BEEN EXCEEDED, THE TERMINATION ELBOW AND VENT EXTENSION PIPE SHALL BE "SHIPPED LOOSE".
3. THE TERMINATION ELBOW, EXHAUST VENT PIPE, VENT EXTENSION PIPE AND COUPLER MATERIAL MAY BE SCHEDULE 40 PVC, CPVC OR ABS.
4. WHEN THE TERMINATION ELBOW AND EXTENSION PIPE ARE "SHIPPED LOOSE", THEY MUST BE FIELD INSTALLED. APPLY THE APPROPRIATE PRIMER AND BONDING CEMENT TO ALL THE PARTS TO BE FASTENED TOGETHER, SLIDE EACH OF THE PARTS TOGETHER AS SHOWN TO COMPLETE THE FIELD INSTALLATION.

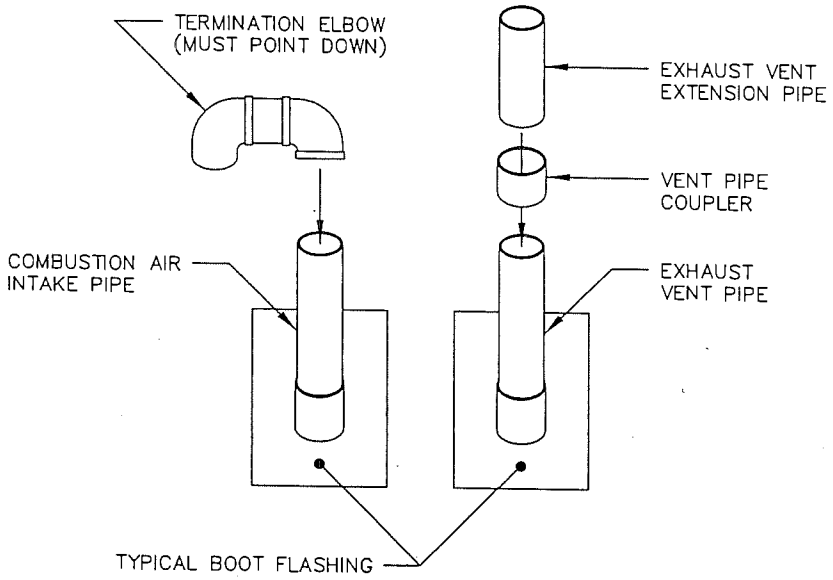

A DIRECT–VENT VERTICAL VENT TERMINATION

GENERAL NOTES:

1. THE INLET FOR THE COMBUSTION AIR INTAKE PIPE MUST EXTEND AT LEAST 12 INCHES ABOVE THE ROOF LINE.
2. THE EXHAUST VENT OUTLET MUST EXTEND AT LEAST 10 INCHES ABOVE THE INLET OF THE COMBUSTION AIR INTAKE PIPE.

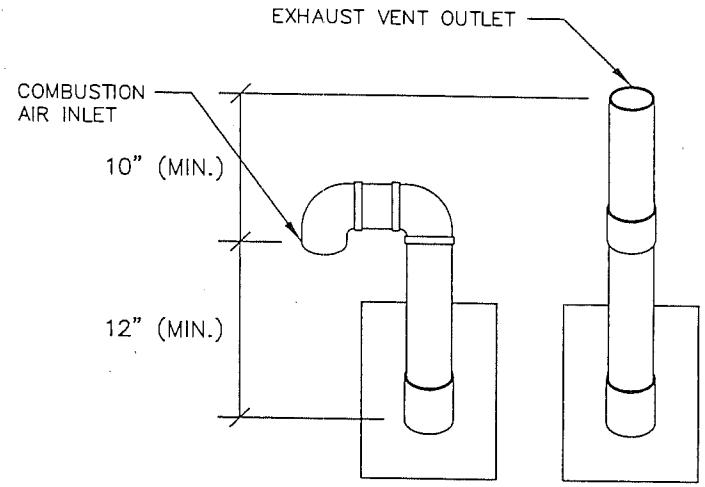

B COMPLETED VERTICAL VENT INSTALLATION

DAPIA SEAL

APPROVED
PFS Corporation
Dallas TX – 2
8/17/04
HUD Manufactured Home Construction & Safety Standard

ENGINEER SEAL

MODIFICATIONS

PROPRIETARY AND CONFIDENTIAL
THESE DRAWINGS AND SPECIFICATIONS ARE ORIGINAL, PROPRIETARY AND CONFIDENTIAL MATERIALS OF CHAMPION.
COPYRIGHT © 1976-2004 BY CHAMPION

TITLE: ADDENDUM
HIGH–EFFICIENCY GAS FURNACE VERTICAL VENT TERMINATION

DRAWING NO. IN49.992.02

SHEET: 2 OF 2

DRAWN BY: CEI | DATE: 08/05/04 | N.T.S.

CALC. INDEX NO. :

CHAMPION

ON-SITE DWV INSTALLATION

FIELD INSTALLED DRAIN LINES BELOW FLOOR

ALL REQUIRED PIPE, GLUE, AND SUPPORT NECESSARY TO COMPLETE FIELD INSTALLED DRAINS ARE SHIPPED WITH THE HOME.

PROCEDURE

1. LOCATE THE OUTLET BELOW THE HOME. USING THE APPLICABLE DRAWING, LOCATE THE NECESSARY FITTINGS FOR EACH OUTLET AND SECURE THE FITTINGS TO THE OUTLETS.

   A. POSITION FITTINGS ON DROPS TO ROUTE DRAINS PERPENDICULAR TO FRAME MEMBERS SPACED 4' O.C. OR DIRECTLY BELOWTRANSVERSE FRAME MEMBERS FOR INSTALLATION OF DRAIN SUPPORTS.

   B. FITTINGS MUST BE POSITIONED TO ALLOW 1/4" PER FOOT SLOPE TOWARD THE MAIN OUTLET. (IF A CLEAN-OUT IS LOCATED AT THE UPPER END, A MINIMUM SLOPE OF 1/8" PER FOOT IS ACCEPTABLE).

   C. ALL FITTING CONNECTIONS SHALL BE PER THE INSTRUCTIONS PRINTED ON THE GLUE CONTAINER.

2. STANDARD LENGTHS OF PIPE ARE PROVIDED. CUT PIPE AS REQUIRED FOR LENGTH OF RUN. (CUT ENDS MUST BE DE-BURRED BEFORE BEING CONNECTED) COUPLINGS ARE PROVIDED TO JOIN LENGTHS OF PIPE IF NECESSARY.

3. AFTER FITTINGS ARE INSTALLED AND PIPE SECTIONS ASSEMBLED, CONNECT THE ASSEMBLY TO THE FITTINGS AT THE OUTLETS USING THE GLUE PROVIDED.

4. SUPPORT THE DRAIN LINES 4' O.C. USING THE HANGERS PROVIDED. AS AN ALTERNATE, 30GA x 3/4" STEEL OR SIGNODE 1/2" STRAPS MAY BE USED IN PLACE OF THE ONES PROVIDED WITH THE HOME. ALTERNATE HANGERS AND FASTENERS MUST BE PROVIDED BY THE OWNER OR CONTRACTOR. SECURE ALTERNATE STRAPS TO FRAMING WITH #6 x 1" SCREWS 4' O.C. SELF TAPPING SCREWS MAY BE USED WHEN STRAPS ARE SECURED TO CHASSIS MEMBERS.

5. IF YOUR HOME IS LOCATED IN AN AREA SUBJECT TO EXTREME COLD, PROVISIONS SHOULD BE TAKEN TO PREVENT LINES FROM FREEZING BY WRAPPING DRAINS WITH INSULATION.

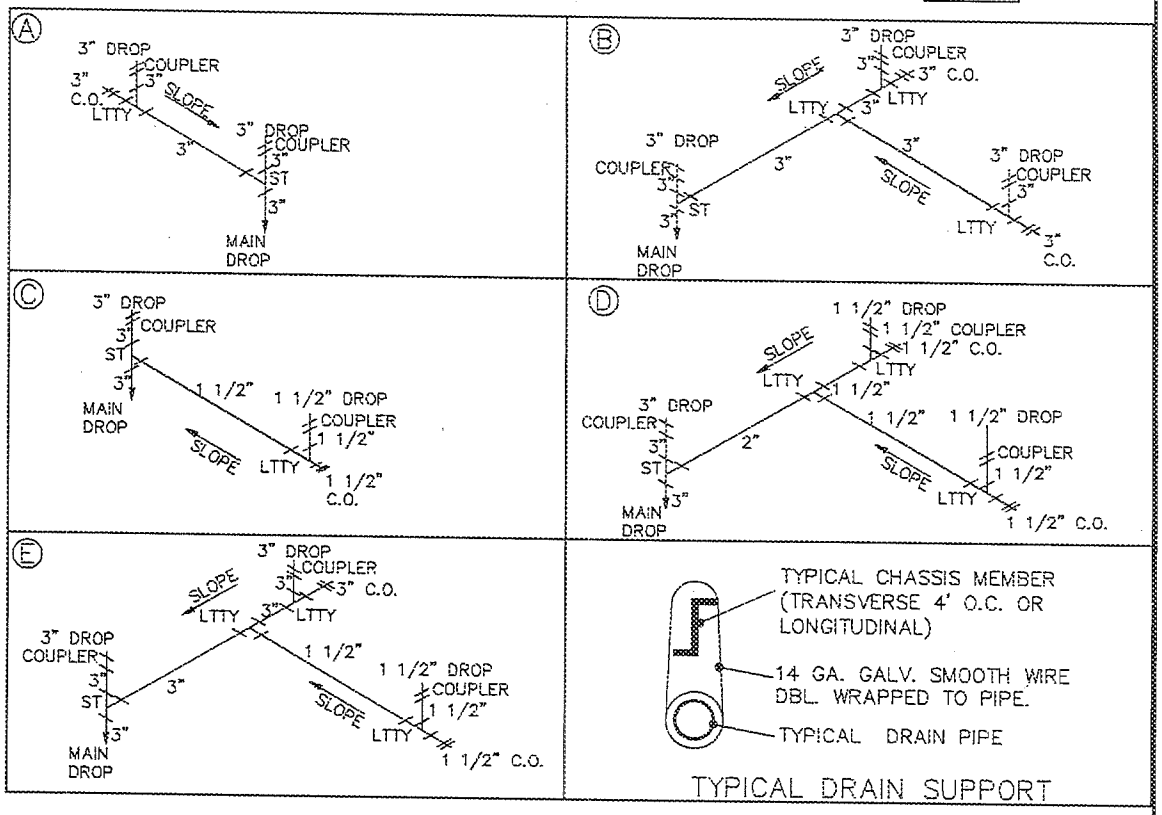

FOR HOMES WITH TWO 3" DROPS USE DETAIL A.
FOR HOMES WITH THREE 3" DROPS USE DETAIL B.
FOR HOMES WITH A 1 1/2" AND A 3" DROP USE DETAIL C.
FOR HOMES WITH TWO 1 1/2" DROPS AND A 3" DROP USE DETAIL D.
FOR HOMES WITH TWO 3" DROPS AND A 1 1/2" DROP USE DETAIL E.

DUE TO CLEAN OUTS BEING PROVIDED AT DROPS, FIELD INSTALLERS CAN DECIDE WHICH DROP WILL BE THE MAIN DROP ON SITE. THE CLEAN OUTS AT UPPER END FACILITATE PIPE BEING SLOPED FROM THAT END.

DAPIA SEAL	ENGINEER SEAL	MODIFICATIONS	TITLE: SPECIAL MIDWEST ON-SITE DWV INSTALLATION	DRAWING NO. SP95.03.01
APPROVED PFS Corporation Dallas TX – 2 6/18/04 HUD Manufactured Home Construction & Safety Standard			DRAWN BY: CEI / DATE: 06/17/04 / NO SCALE	SHEET: 1 OF 1
			CALC. INDEX NO. :	

PROPRIETARY AND CONFIDENTIAL
THESE DRAWINGS AND SPECIFICATIONS ARE ORIGINAL PROPRIETARY AND CONFIDENTIAL MATERIALS OF CHAMPION.
COPYRIGHT © 1976-2004 BY CHAMPION

champion

ON-SITE COMPLETION OF WATER HEATER DRIP PAN

The water heater drip pan drain pipe must be completed on site by others. The pipe must drain to the outside of the home (outside the "footprint"). Drain must maintain a positive slope (min. 1/8" per foot), drain must also be rodent and insect proof. See drawing below.

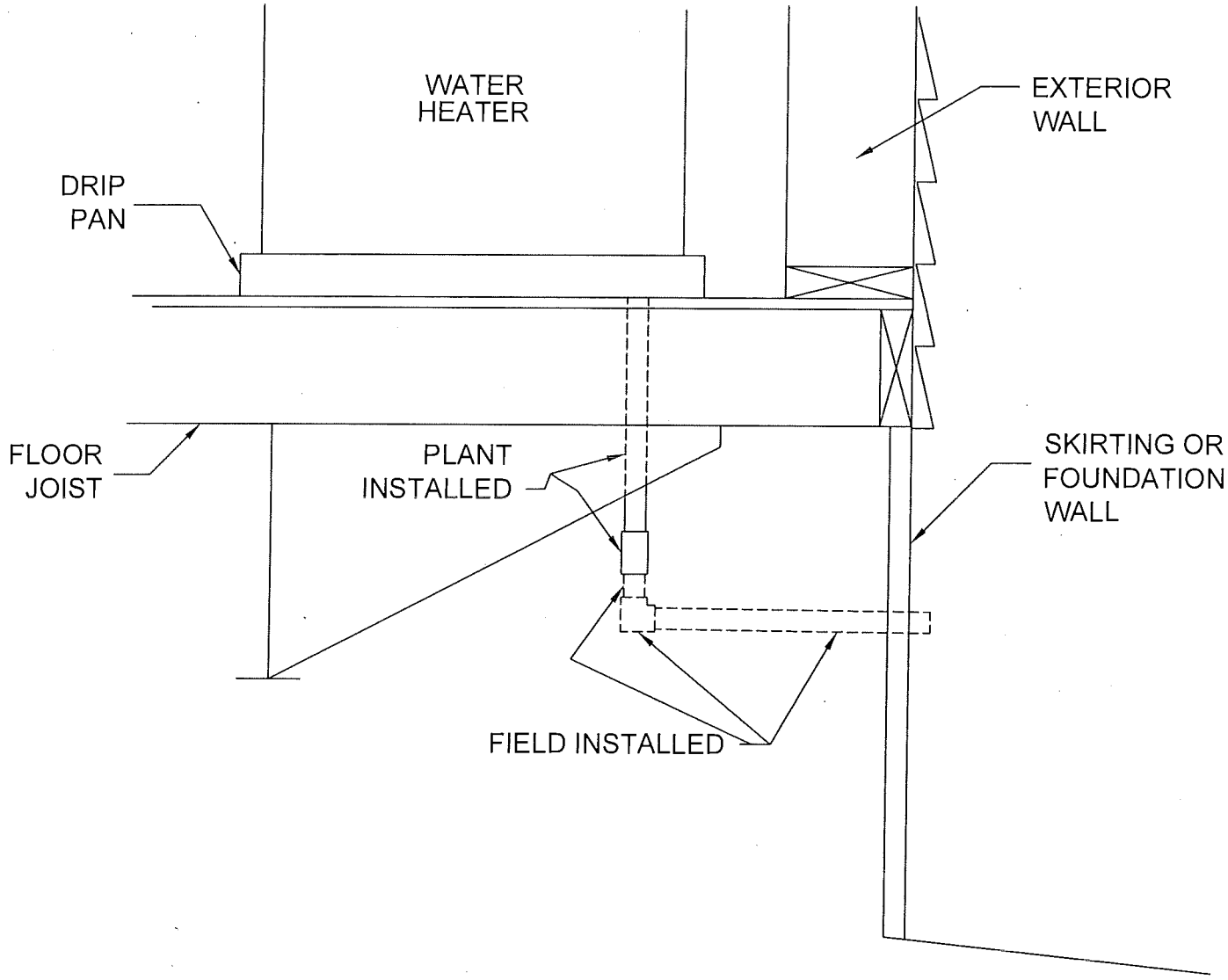

9-22-2003