7/14/06

SKYLINE CORPORATION MANUFACTURED HOME INSTALLATION MANUAL

SKYLINE®

BRINGING AMERICA HOME. BRINGING AMERICA FUN.

TABLE OF CONTENTS

Chapter 1 — Introduction 4

Chapter 2 — Definitions 5

Chapter 3 — Site Preparation
- Zone Maps 6
- Site Grading 7-8
- Description of Soils 8

Chapter 4 — Foundation and Support Requirements
- Piers 9
- Design Requirements 9
- Design Procedures 9-10
- Acceptable Footings 10
- Placement in Freezing Climates 10
- Proper Sizing of Footings 10
- Permanent Foundations 10
- Flood-Prone Areas 10
- Severe Wind Areas 10
- Special Snow Load Conditions 10
- Important Reference Documents 10
- Typical Installations 11
- Typical Pier Construction 12
- Support Requirements 13-15
  - Single Wides 13
  - Double Wides 14-15
- Sidewall Openings 15
- Pavilion Dormer Blocking 16
- Footing Sizes ..... 16 -17

Chapter 5 — Set-Up Procedures
- Moving Home to Location 18
- Positioning Home 18
- Leveling and Blocking 18-20
  - Single Wides 18-19
  - Double Wides 20
- Adjustable Outrigger 21
- Use of Water Level 22
- Double Wide Interconnection 23-24
- Tie Down Instructions 25-26
- Over-The-Roof Straps 26
- Anchor Tables Wind Zone I 27-29
- Anchor Tables Wind Zone II & III 30-31
- Anchor Tables for 102" Sidewalls 32
- Longitudinal Tie Down Instructions 33
- Tie Down Example 34

Double Wide Exterior Closure 35-37
- Masonite Siding 35
- Vinyl Lap Siding 36
- HardiPanel & HardiPlank Siding 37

Installation of Shingle Roof 38-39

Double Wide Utility Interconnection 40-43
- Bonding 40
- Electrical Crossover 40
- Heating Crossover 41
- Gasline Crossover 42
- Waterline Cross Connect 42
- Drainline Cross Connect 43

Installation of Exterior Light Fixtures 43

Venting of Skirting and Crawlspace 43

Metal Roof Tightening 43

Porches & Decks 43

Chapter 6 — Installation of Optional Features
- Electrical Dryer Venting 44
- Gas Dryer Installation 44
- Gas Water Heater Venting 44
- Grill/Range Venting 44
- Paddle Fan Installation 45-46
  - Flush Ridge Beam 45
  - Protruding Ridge Beam 46
  - False Beam 46
- Air Conditioning Electrical Connect 47
- Evaporative Cooler 47
- Dealer Installed Blend Air 48
- Expanding Rooms, Slide-Outs 49
- Site Attached Structures 49
- Hinged Roofs and Eaves 49
- Ceiling Fans 49
- Telephone and Cable TV 49
- Fireplace Installation 49
- Field Installed Hearth 49
- Field Installed Fireplace Chimney 50

Chapter 7 — Utility System Connection and Testing
- Water 51
- Drainage - Connection 51
- Drainage - 1, 1-1/2, 1-3/4 & 2 Bath 51
- Gas 51-52
- Electrical 53
- Outside Panel Box 53
- Electrical System Test 53
- Multi-Section Frame Bonding 54
- Typical Under-Chassis Feed Connections 54
- Typical Meter Base Installation 55
- Meter Base & Panel w/Masthead 55

Chapter 8 — Protective Window Coverings 56-61

Chapter 9 — Final Inspection
- Final Inspection 62
- Installation Inspection Checklist 62

WARNING

ONLY EXPERIENCED PERSONS KNOWLEDGEABLE OF MANUFACTURED HOME SET-UP PROCEDURES SHOULD SET UP THIS HOME

NOTE: THIS MANUAL IS INTENDED TO INSTRUCT AND TO ASSIST ALREADY QUALIFIED PERSONNEL IN PROPER INSTALLATION OF SKYLINE MANUFACTURED HOMES. IT IS NOT INTENDED TO ENABLE SOMEONE UNFAMILIAR WITH MANUFACTURED HOME INSTALLATION TO PERFORM THE INSTALLATION. SET-UP SHOULD BE DONE ONLY BY QUALIFIED PEOPLE. WHOEVER DOES THE SET-UP SHOULD GUARANTEE THEIR WORK IN WRITING FOR A REASONABLE TIME AND SHOULD, IF NECESSARY, AGREE TO RELEVEL THE HOME WITHIN 90 DAYS AFTER THE INITIAL SET-UP.

Chapter 1 INTRODUCTION

PLEASE READ ALL INSTRUCTIONS PRIOR TO SET-UP!

This Skyline home was engineered, constructed and inspected for conformance to the Federal Manufactured Home Construction and Safety Standards in effect on the date of manufacture. This National Standard sets forth comprehensive requirements for design construction, fire safety, plumbing, heating systems and electrical systems for manufactured homes designed to be used as dwellings.

This manual contains detailed installation instructions, including specifications and procedures for erection and hookup of your manufactured home. It has been written in an objective and easy-to-understand manner so it can be understood by people without extensive technical training. It discusses the set-up of the home from preparing the site through final inspection. It includes many tables and figures giving important data for proper set-up. Careful adherence to this manual by the homeowner and installation crew, and consultation with a registered professional or structural engineer in those unusual circumstances it does not cover, will assure you of a quality, safe and affordable home for many years to come.

Prior to locating or relocating your home, contact the local authority having jurisdiction for installation to see if permits for such procedures as blocking, anchoring, or utility connections are required. Inspections may be required during installation. On private property, zoning or development covenants may apply and should be taken into consideration. NOTE: Preparations of the site, when accomplished by others than the home installer, may not be in accordance with these instructions.

THE IMPORTANCE OF CORRECT SET-UP CANNOT BE OVEREMPHASIZED. Correct set-up is absolutely essential to homeowner satisfaction. If you are not absolutely certain of the proper procedure or you encounter unusual conditions, please contact your factory service representative.

THE INSTRUCTIONS CONTAINED HEREIN ARE MINIMUM REQUIREMENTS. APPLICABLE LOCAL OR STATE LAW MAY HAVE OTHER OR GREATER REQUIREMENTS WHICH MUST BE COMPLIED WITH TO OBTAIN OR REGAIN THE RIGHT TO OCCUPY THE HOME.

APPROVED
PFS Corporation
Madison WI
01/06/06
HUD Manufactured Home Construction & Safety Standards

The recommended procedures contained in this manual are intended to assist in proper installation of this home. Field experience may justify alternate acceptable procedures which, when completed, result in performance at least equal to that which will result from conformance to the details and specifications herein. For example, on double wide installation you may find it advantageous, due to local conditions, to bolt the floors together prior to bolting roof halves together, or vice versa. Either method is acceptable as long as the bolting schedule is adhered to.

NOTE: A MANUFACTURED HOME SET UP IN THE WRONG STRUCTURAL ZONE DOES NOT MEET THE REQUIREMENTS OF THE FEDERAL MANUFACTURED HOME CONSTRUCTION AND SAFETY STANDARDS. BEFORE COMMENCING SET-UP, SEE CONSTRUCTION INFORMATION, LOCATED IN THE MASTER BEDROOM CLOSET OR AT THE ELECTRICAL DISTRIBUTION PANELBOARD, FOR DESIGNATION OF ZONE FOR WHICH THE HOME WAS CONSTRUCTED.

SPECIAL CONSTRUCTION SUCH AS EXPANDO UNITS, TRIPLE WIDE UNITS, AND PERIMETER BLOCKED UNITS WILL BE COVERED IN SUPPLEMENTS TO THIS MANUAL. CONTACT YOUR FACTORY OR DEALER IF THIS HOME HAS ANY SUCH FEATURES AND YOU DO NOT HAVE THE APPLICABLE SUPPLEMENTS.

WARNING: ONLY TRAINED CREWS SHOULD INSTALL THE HOME. INSTALLERS SHOULD FOLLOW THE SAFETY INSTRUCTIONS PROVIDED IN THIS MANUAL.

THIS HOME WEIGHS SEVERAL TONS

USE ENOUGH TEMPORARY WOOD BLOCKING TO SUPPORT THE HOME DURING SET-UP.

No one should be allowed under the home unless it is securely in place, even if it is not moving.

The technical content of the Installation Manual has been reviewed by PFS Corporation and found to be in accordance with the Federal Manufactured Home Construction and Safety Standards.

Chapter 2

DEFINITIONS

ANCHORING EQUIPMENT: Straps, cables, turnbuckles and chains, including tensioning devices, that are used with ties to secure a manufactured home to ground anchors.

ANCHORING SYSTEM: A combination of ties, anchoring equipment, and ground anchors that will, when properly designed and installed, resist the wind's overturning the home or moving it sideways.

FOOTING: That part of the support system that sits directly on the ground at, below or partly below grade to support the piers.

PERIMETER SUPPORT: The portion of a support system that supports the sidewalls at the floor line.

PIER: That portion of the support system between the footing and the manufactured home, exclusive of caps and shims. Types of piers include, but are not limited to, the following:

1. Manufactured Steel Stands
2. Manufactured Concrete Stands, and
3. Concrete Blocks

SITE, MANUFACTURED HOME: A parcel of land designed and designated for the location of one manufactured home, its accessory building or structures, and accessory equipment for exclusive use of the home's occupants.

STABILIZING SYSTEM: A COMBINATION OF PROPERLY INSTALLED ANCHORING AND SUPPORT SYSTEM.

STAND, MANUFACTURED HOME: That area of a manufactured home site which has been reserved for placement of a manufactured home.

SUPPORT SYSTEM: A combination of footings, piers, caps and shims that will, when properly installed, support the manufactured home.

SITE PREPARATION

ZONE MAPS OF THE UNITED STATES

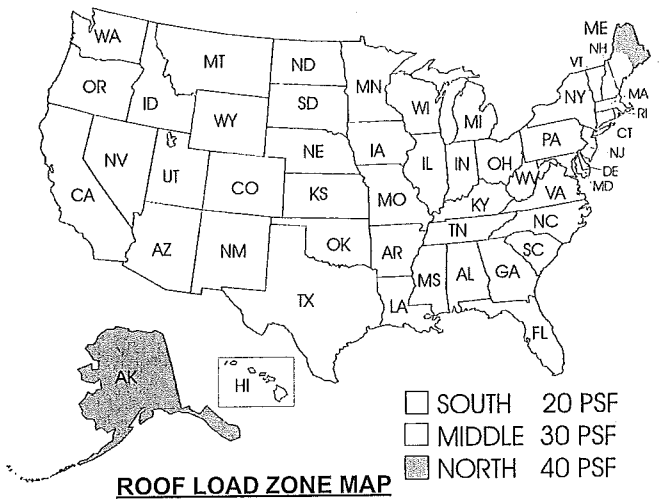

ROOF LOAD ZONE MAP

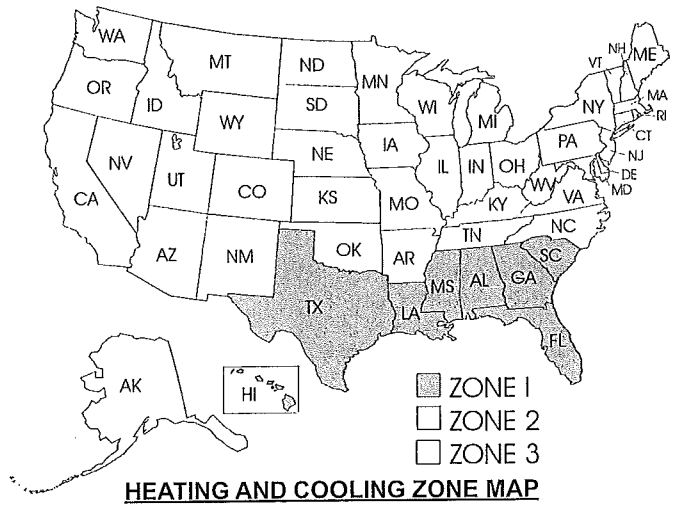

HEATING AND COOLING ZONE MAP

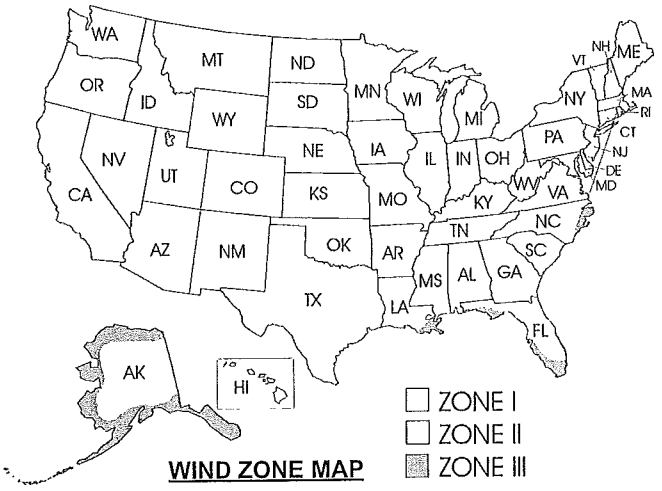

WIND ZONE MAP

IN WIND ZONES II AND III, UNLESS THE HOME AND ITS ANCHORING AND FOUNDATION SYSTEM HAVE BEEN DESIGNED FOR THE INCREASED REQUIREMENTS OF EXPOSURE 'D' OF ANSI/ASCE 7-88, IT SHOULD NOT BE LOCATED WITHIN 1500 FEET OF THE COASTLINE.

The following local governments listed by state (county/parishes, unless noted otherwise) are located in **WIND ZONE II:**

ALABAMA - Baldwin and Mobile

FLORIDA - All counties except those identified as being within Wind Zone III.

GEORGIA - Bryan, Camden, Chatham, Glynn, Liberty and McIntosh

LOUISIANA - Acadia, Allen, Ascension, Assumption, Calcasieu, Cameron, East Baton Rouge, East Feliciana, Evangeline, Iberia. Iberville, Jefferson Davis, LaFayette, Livingston, Pointe Coupee, St. Helena, St. James, St. John the Baptist, St. Landry, St. Martin, St. Tammany, Tangipahoa, Vermillion, Washington, West Baton Rouge and West Feliciana.

MAINE - Hancock and Washington

MASSACHUSETTS - Barnstable, Bristol, Dukes, Nantucket and Plymouth

MISSISSIPPI - George, Hancock, Harrison, Jackson, Pearl River and Stone

NORTH CAROLINA - Beaufort, Brunswick, Camden, Chowan, Columbus, Craven, Currituck, Jones, New Hanover, Onslow, Pamlico, Pasquotank, Pender, Perquimans, Tyrrell and Washington

SOUTH CAROLINA - Beaufort, Berkeley, Charleston, Colleton, Dorchester, Georgetown, Horry, Jasper and Williamsburg.

WIND ZONE II (continued)**:**

TEXAS - Arkansas, Brazoria, Calhoun, Cameron, Chambers, Galveston, Jefferson, Kenedy, Kleberg, Matagorda, Nueces, Orange, Refugio, San Patricio and Willacy

VIRGINIA (The cities of)**-** Chesapeake, Norfolk, Portsmouth, Princess Anne and Virginia Beach

The following local governments listed by state (county/parishes, unless noted otherwise) are located in **WIND ZONE III:**

FLORIDA - Broward, Charlotte, Collier, Dade, Franklin, Gulf, Hendry, Lee, Martin, Manatee, Monroe, Palm Beach, Pinellas and Sarasota

LOUISIANA - Jefferson, La Fourche, Orleans, Plaquemines, St. Bernard, St. Charles, St. Mary and Terrebonne

NORTH CAROLINA - Carteret, Hyde and Dare.

The following states and territories are within

WIND ZONE III:

State of HAWAII

ALASKA - Costal regions between the 90 mph isotach on ASCE 7-88 wind map and the coast.

U.S. TERRITORIES - American Samoa, Northern Mariana Islands, Trust Territory of Pacific Islands, Guam, Puerto Rico and U.S. Virgin Islands.

SITE PREPARATION

The importance of site preparation for a problem-free installation cannot be overstated. All vegetation must be removed from under the home site. The site must be properly graded and sloped to provide for storm drainage runoff. In particular, the area under the home must be graded to prevent water accumulation. Skyline Corp. recommends the home site slope 10 feet in all directions away from the home. If the home is sited on sloping terrain or a hillside, the soil must be graded on all sides to channel storm runoff around the home and not under it. If the home is set in a pit, it is extremely important to provide water drainage from under and around the home.

WARNING: THE AREA UNDER AND AROUND THE HOME MUST BE SLOPED TO PREVENT WATER ACCUMULATION. EXCESSIVE MOISTURE UNDER THE HOME CAN CAUSE UNNECESSARY DETERIORATION, AND CAUSE CONDENSATION PROBLEMS, WHICH COULD AFFECT THE HOME'S WARRANTY. IT COULD ALSO AFFECT THE STABILITY OF THE FOOTINGS AND PIERS WHICH SUPPORT THE HOME.

If the home is to be perimeter skirted or "pit-set," ventilation of the under-floor area is required to minimize the effect of moisture under the home. Ventilation openings must be provided in the under-floor enclosure or skirting on at least three (3) sides (preferable on all sides) with a net area of at least one square foot per 150 square feet of floor area. The required ventilators are to be approximately equally spaced around the perimeter of the home with a ventilation opening within three (3) feet of each outside corner.

Proper support of the manufactured home must allow for soil conditions in the immediate area. Pier footings must be placed on firm undisturbed soil (not loose fill) or soil which has been compacted to at least 90 percent of its maximum relative density. Support piers may also be placed directly on concrete slabs designed for manufactured home placement as found in manufactured home communities.

After completion of grading and filling (if necessary), the bearing capacity of the soil at the depth of the footings should be determined. A pocket penetrometer (available from engineering supply houses) or other method acceptable to local jurisdictions may be used. If the soil cannot be tested but can be identified, use the foundation bearing pressures shown in Figure 3-1 as a guide. If the soil cannot be identified, use the lowest value, 1,000 PSF. Under unusual conditions, or if the soil appears to be peat or uncompacted soil, consult a local geologist or professional engineer for aid.

CAUTION

EXCESSIVE WATER IN THE SOIL UNDER THE HOME WILL CAUSE UNNECESSARY DETERIORATION OF THE HOME AND AFFECT THE COMFORT LEVEL IN THE HOME. CONTINUOUS STANDING WATER UNDER THE HOME CAN CAUSE CONDENSATION PROBLEMS AND AFFECT THE HOME'S WARRANTY.

PREVENTION OF WATER BENEATH THE HOME

SINGLE SECTIONAL

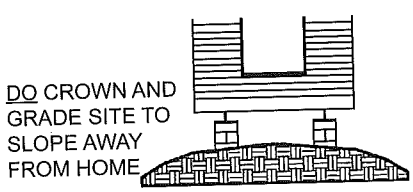

DOUBLE SECTIONAL

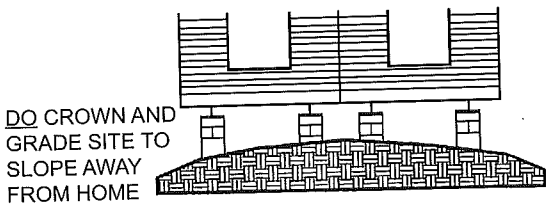

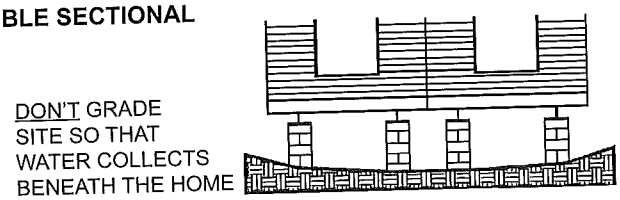

TRIPLE SECTIONAL

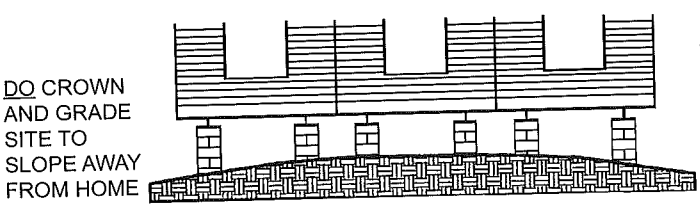

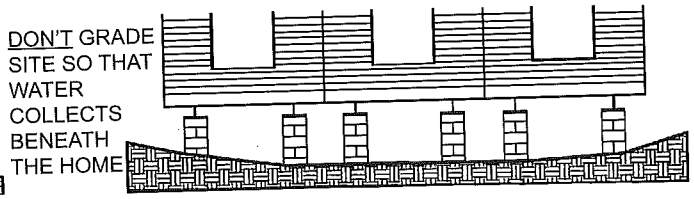

GROUND BARRIER

There is a strong tendency for ground moisture to be drawn into the home, greatly complicating efforts to control humidity and condensation.

A ground moisture-vapor retarder of 6 mil. rated polyethylene plastic, vinyl or similar material laid on the ground surface under the home is recommended to assist in controlling the humidity in the home.

General Description of Soils	
Soil Type Based on the Unified Classification System	Allowable Pressure (Pounds Per Square Foot) No allowances made for overburden pressure, embedment, depth, water table height, or settlement problems.
Rock or Hard Pan	4,000 and up
Sandy Gravel and Gravel	2,000
Sand, Silty Sand, Clayey Sand Silty Gravel, or Clayey Gravel	1,500
Clay, Sandy Clay, Silty Clay, or Clayey Silt	1,000
Uncompacted Fill	Special Analysis is Required
Peat or Organic Clays	Special Analysis is Required

NOTE:
To be used only when none of the following is available:

a. Soils investigation and analysis of the site.

b. Compliance with the local building code.

c. Competent opinion by a local engineer or building official.

d. If the soil bearing capacity is less than 1,000 PSF, consult a professional engineer for foundation system requirements.

FIG. 3-1

CHAPTER 4

FOUNDATION AND SUPPORT REQUIREMENTS

NOTE: This chapter covers only foundations. Page 11 summarizes the usual types. Set-up procedures and methods for securing the home to its foundation are discussed in Chapter 5.

A home that is certified for a higher roof load zone than the area that it is installed may be set on a foundation system that is designed for the roof load zone for that area of the country. For example, a home that is certified to withstand a 30 PSF roof load is installed in a 20 PSF roof load zone area. The support under the home need only be designed for the 20 PSF roof load, in accordance with the requirements set forth in this manual.

PIERS

Importance. Incorrect size, location or spacing of piers may cause serious structural damage to the home. It is important to install piers around the perimeter if required for the home. Failure to do so may lead to sagging floors, walls and roofs.

Acceptable Types. Piers may be concrete blocks or pressure treated wood, capped and shimmed with wedges, or adjustable manufactured metal or concrete devices (see Figure 4-2). Manufactured piers should be listed and labeled for the required load capacity.

DESIGN REQUIREMENTS

Load-Bearing Capacity. The load that each pier must carry depends on factors such as the dimensions of the home, the roof live load, the spacing of the piers, and the way they are used to support the home. Center beam/marriage wall blocking is required for multisection homes.

See tables 1 and 2 for pier capacities. Manufactured piers must be rated to at least these capacities, and locally constructed piers must be designed to transmit these loads safely.

Configuration. Figure 4-2 shows the recommended arrangement of concrete piers constructed on-site. Concrete blocks should have nominal dimensions of at least 8" x 16". They must be stacked with their hollow cells aligned vertically. When piers are constructed of blocks stacked side-by-side, every layer should be at right angles to the previous one (See Figure 4-2).

Cap hollow block piers as shown in Figure 4-2 to distribute the structural load evenly across them. Caps may be of solid masonry or hard wood, and of the same length and width as the piers they rest upon. Avoid plywood, as it may lead to unwanted settling or movement.

Use 4" x 6" hardwood shims (wedges) to level the home and fill any gaps between the base of the I-beam and the top of the pier cap. Always use shims in pairs (See Figure 4-2). Drive them in tightly so they do not occupy more than 1" of vertical space. When the space to be shimmed is less than the minimum thickness of available caps or concrete blocks, dimension lumber may be used under the caps.

Select manufactured pier heights so that their adjustable risers do not extend more than recommended by the manufacturer when finally positioned.

All piers must rest on footings that either extend below the frost line or are otherwise protected from frost effects, and are placed on either undisturbed soil or compacted fill.

DESIGN PROCEDURES

Piers Less Than 36" High. Construct piers less than 36" high out of single, open or closed-cell concrete blocks, 8" x 8" x 16". Install them so that the long side is at right angles to the supported I-beam (See Figure 4-2). Position open cells vertically upon the footers. (See Figure 4-1). Horizontal offsets should not exceed 1/2" top to bottom. Mortar is not normally required. Manufactured piers should be listed and labeled. Do not extend their adjusting studs beyond the limits specified by the manufacturer.

Piers 36" to 80" High. Construct all piers between 36" and 80" high, and all corner piers over three (3) blocks high, out of double, interlocked concrete blocks (See Figure 4-2). Mortar will not normally be required.

Piers Over 80" High. Where permitted by local codes, lay them in concrete mortar with steel reinforcing bars inserted in the block cells and fill the cells with concrete. Where such construction is not permitted by local codes, have piers over 80" high designed by a registered professional or structural engineer.

Location and Spacing. The location and spacing of piers depend upon the dimensions and weight of the home, the roof load zone, size, and type of construction of the footings.

Other factors such as the location of doors or other opening and heavy pieces of furniture are also important. In general locate piers no more than 2' from either end, and not over 10' o.c.

Single-Section Homes. Figure 5-2 shows the recommended locations and spacing of piers for single-section homes.

Multi-Section Homes. Figure 5-3 shows the recommended location and spacing of piers for multi-section homes.

Under Doors and Heavy Furniture. Place additional piers on both sides of exterior doors, sidewall openings wider than 4' (such as sliding glass doors), at Pavilion dormers, under porch posts, wood stoves, and under the expected locations heavy pieces of furniture such as pianos, organs, waterbeds etc.

FOUNDATION AND SUPPORT REQUIREMENTS (Continued)

DESIGN PROCEDURES (Continued)

Footings. Support every pier with a properly designed footing, as follows.

ACCEPTABLE TYPES OF FOOTINGS.

Concrete. Footings may consist of precast or poured-in-place concrete, pads, slabs, or ribbons with a 28-day compressive strength at 3,000 psi.

Pressure-Treated Permanent Wood. Two layers of 2" thick pressure-treated wood planks, with the long dimension of the second layer placed perpendicular to that of the first, fastened with cut edges painted or retreated, may also be used.

Other Materials. You may also use other materials approved for this use by local authorities if they provide equal loadbearing capacity and resistance to decay.

PLACEMENT IN FREEZING CLIMATES.

Conventional Footings. For frost-susceptible soils, the most cost effective method of preventing the harmful effects of ground frost heave is usually by placing the footing below the frost line. Consult local authorities to determine frost penetration. In the absence of a local code, use the frost penetration map as a guide.

Existing manufactured home communities may be located on frost-susceptible soils in which homes historically have been installed on piers or slabs located above the frost line. For these communities, if there is a history of these homes not experiencing any deleterious effects from frost-heave and the homes are setup, supported and skirted as described herein, then footings are not required to extend below the frost line.

Floating Slab System. When properly engineered by a registered professional engineer, compatible with the anchorage requirements of Chapter 5, and acceptable to the local authority having jurisdiction, a "floating slab system" may be used above the frost line.

Insulated Foundations. Footings may also be placed above the frost line when the home is provided with a perimeter foundation or skirting having insulation properties sufficient to prevent freezing of the soil under or adjacent to every loadbearing component of the foundation and acceptable for this purpose by the local authority having jurisdiction. Useful design guidelines may be found in references at the end of this chapter. Insulation systems should be compatible with the requirement to cross ventilate the entire space under the home.

Proper Sizing of Footings. Proper sizing of footings depends upon the load-carrying capacity of both the piers and the soil. See Table 4 for recommended footing sizes. See Table 4B for minimum required concrete footing thickness. Footing size in no case shall be less than 144 sq. in. or smaller than the pier it supports.

Permanent Foundations. Check local building codes and regulations and consult a registered professional or structural engineer when you are setting your home on a permanent foundation (such as a full basement, crawl space or loadbearing perimeter foundation). A permanent foundation design, which meets most local codes, may be available from Skyline Corporation. Please contact the Skyline division which manufactured the home or Skyline's National Director of Consumer Relations.

Flood-Prone Areas. Skyline Corporation does not recommend locating homes in river or coastal flood-prone areas.

Special elevation and anchoring techniques are required when locating in a flood-prone area. Consult a registered professional or structural engineer to make sure that the home design and construction conform to applicable federal, state and local codes and regulations. The FEMA publication listed below contains design and construction recommendations.

Severe Wind Areas. Special foundation and anchoring techniques are required when locating in a severe wind area. Consult a registered professional or structural engineer. The HUD foundations design guide referenced herein contains recommendations for designing foundations and anchoring systems. Do not place your home in a wind zone more severe than the one indicated on the data plate located by your home's main electrical panel.

Special Snow Load Conditions. Homes designed for and located in heavy snowfall areas or subject to other extreme loading conditions may require special piers or footings. See tables and/or special manufacturer's instructions provided with your home.

IMPORTANT REFERENCE DOCUMENTS

- Foundation plans available from manufacturer.
- ANSI/NCSBCS A225.1-1987, "Manufactured Home Installations," NCSBCS, 505 Huntmar Park Drive, Herndon, VA 22070, (703)437-0100.
- ASCE 7-88, "Minimum Design Loads for Buildings and other Structures," ASCE, 345 East 47th Street, New York, NY 10017-2398.
- FEMA 85, "Manufactured Home Installation in Flood Hazard Areas," FEMA, Washington, DC 20472, (202)646-2708, September, 1985.
- HUD Handbook 4930.3 (1989), "Permanent Foundations Guide for Manufactured Housing," HUD, 415 7th Street, S.W., Washington, CD 20410.
- "All Weather Wood Foundation Systems Manual," National Forest Products Association, 1619 Massachusetts Ave., N.W., Washington, DC 20036, June, 1976.
- "Design Guide for Frost-Protected Shallow Foundations," Prepared for U.S. Dept. of Housing and Urban Development by NAHB, Upper Marlboro, MD, June, 1994, Instrument No. DU100K000005897.
- "Building Foundation Design Guidebook," Document No. DE 88013350, National Technical Information Service, 5285 Port Royal Road, Springfield, VA 22161.

MANUFACTURED HOME INSTALLATIONS
SINGLE OR MULTI-SECTION HOMES
TYPES OF FOUNDATION SYSTEM - MAIN COMPONENTS(*)

1. Piers-Ground Anchors. Home rests on piers of concrete block, formed-in-place concrete, permanent wood or steel pedestals on permanent wood, crushed stone or concrete footers. Ground anchors in soil angled to resist straps or embedded in concrete deadmen in soil. Straps tied to the frame, with or without over-the-top straps.

2. Concrete Slab or Continuous Footing. Home rests on a concrete slab or ribbons of concrete. Straps tied between frame and perimeter footers or concrete slab. Skyline Corp. recommends installing earth anchors prior to pouring concrete slab. Concrete slab should be sloped to prevent water accumulation under home.

3. Pile/Post System. Home rests on piles/posts placed sufficiently deep in the ground to resist all wind, snow, frost heave and earthquake forces. Straps fasten home to the piles/posts or caps placed thereon.

4. Concrete or Concrete Block Load-Bearing Perimeter Walls (Basement or Crawl Space). Home rests on exterior loadbearing walls which sit on concrete footings' weight to resist all external forces. The floor connection to foundation resists external forces.

*For Skyline multi-section homes, the mating walls are supported by piers or support walls with straps and ground anchors, providing resistance to downward and uplift forces.

TYPICAL FOOTING PADS FIG. 4-1

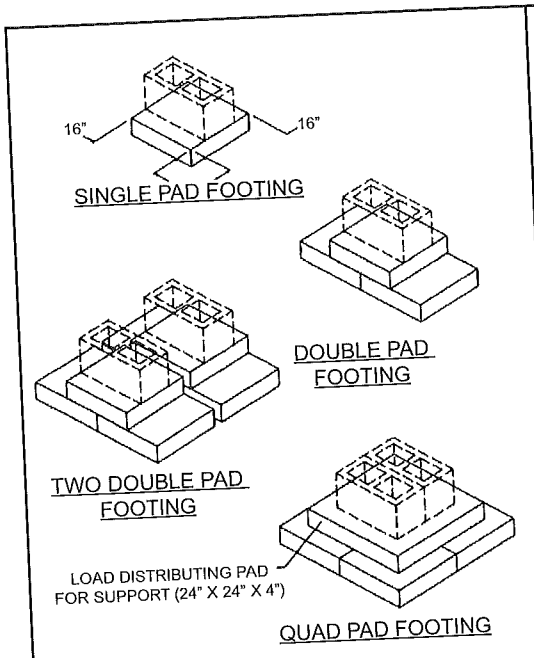

16"x16"x4" CONCRETE PAD FOOTINGS

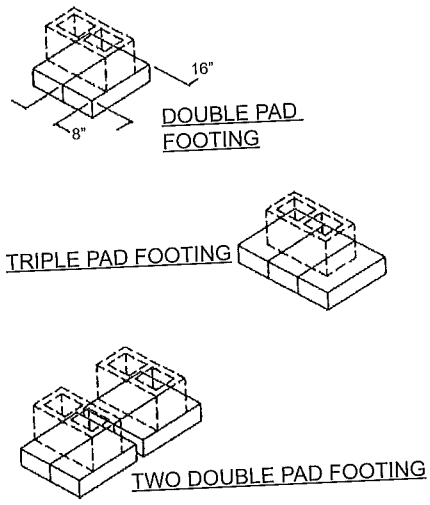

8"x16"x4" CONCRETE PAD FOOTINGS

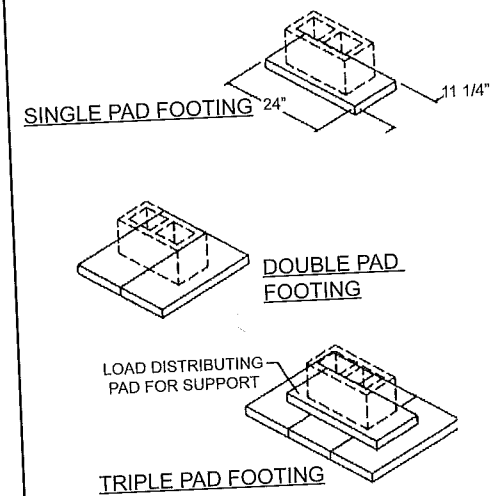

2"x12"x24" WOOD PAD FOOTINGS

FOUNDATION AND SUPPORT REQUIREMENTS (Continued)

TYPICAL PIER CONSTRUCTION

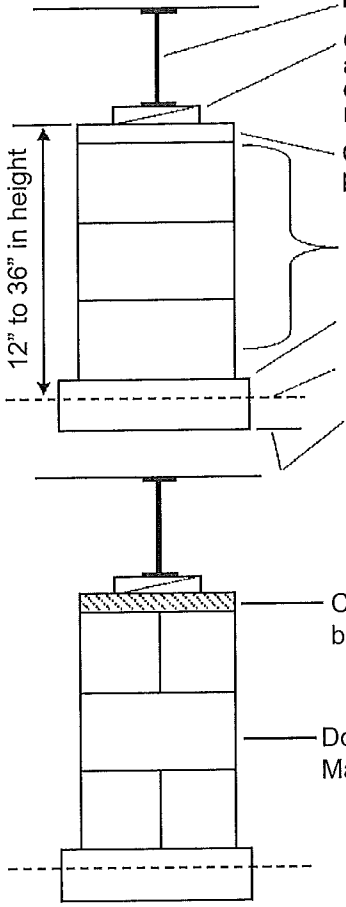

I-Beam frame

Gap between top of pier and main frame may be hardwood plate (not exceeding 2" in thickness) and shims (not exceeding 1" in thickness). Shims shall be at least 4" wide and 6" long, fitted and driven tight between wood plate or pier and main frame. 2" or 4" solid concrete block may fill remainder of gap.

Cap — Wood or concrete, 2" x 8" x 16" installed with 16" dimension perpendicular to the I-beam frame.

Single open or closed cell concrete blocks 8" x 8" x 16" (open cells placed vertically upon footer) installed with 16" dimension perpendicular to the I-beam frame.

Footing - Solid concrete or other product approved for the purpose. Size according to Table 4.

Ground Level

Footing below frost line when subject to frost heaving.

SINGLE BLOCK PIER - 8000 LBS. MAXIMUM CAPACITY. PIER CAPACITY MUST BE EQUAL TO OR MORE THAN REQUIRED FOOTER CAPACITY.

Cap - Solid concrete block or equivalent.

Double Interlocked Blocks, Max. Height is 80".

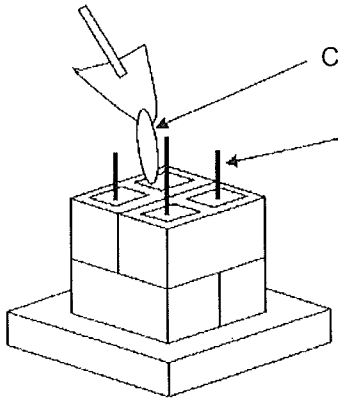

Concrete grouting

Steel reinforcing bars

For piers exceeding 80 inches in height the concrete blocks should be filled with concrete grouting and steel reinforcing rods should be used.

DOUBLE BLOCK PIER - 14000 LBS. MAXIMUM CAPACITY. PIER CAPACITY MUST BE EQUAL TO OR MORE THAN REQUIRED FOOTER CAPACITY.

Footings placed on firm undisturbed soil or in controlled fill free of grass and organic materials compacted to a minimum load bearing capacity of 1000 PSF.

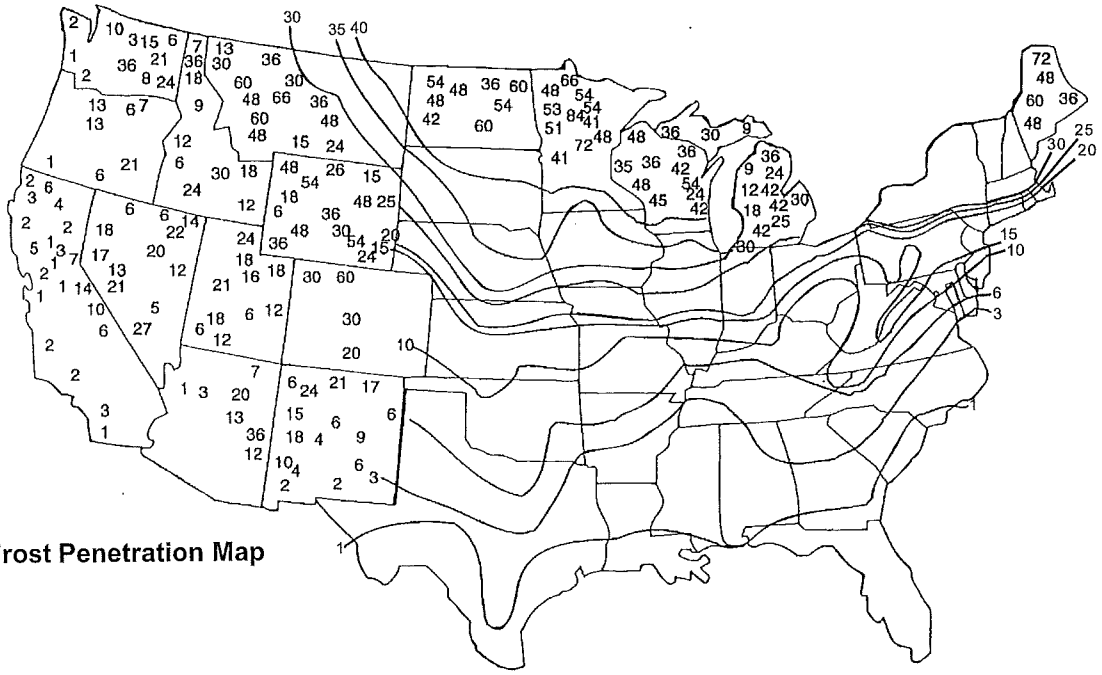

Frost Penetration Map

AVERAGE DEPTH OF FROST PENETRATION — IN INCHES

SOURCE: U.S. Dept. of Commerce Weather Bureau

FIG. 4-2

SUPPORT REQUIREMENTS

The design loads and minimum footing sizes used in the selection of the support structure are set forth in Table 4. The loads and footing sizes are the minimum values to be used for the support structure and are based on the indicated roof live load and a floor live load of 40 PSF.

All load bearing supports and footings may be subject to approval by the local Enforcement Agency.

The support requirements for homes designed for 60 PSF and higher roof load (and those specifically indicated middle and north zone homes) are found in the supplement accompanying this manual entitled "Manufactured Home Installation for Perimeter Blocking."

Contact the Skyline division that built the home for more information concerning perimeter blocking.

TABLE 1
PIER-LOADING UNDER MAIN I-BEAMS
SINGLE-WIDE HOMES

Pier Spacing Under Main I-Beams (Ft.)	12' WIDE HOMES			14' WIDE HOMES			16' WIDE HOMES		
	Pier Load (Lbs) 20 PSF Roof Zone	Pier Load (Lbs) 30 PSF Roof Zone	Pier Load (Lbs) 40 PSF Roof Zone	Pier Load (Lbs) 20 PSF Roof Zone	Pier Load (Lbs) 30 PSF Roof Zone	Pier Load (Lbs) 40 PSF Roof Zone	Pier Load (Lbs) 20 PSF Roof Zone	Pier Load (Lbs) 30 PSF Roof Zone	Pier Load (Lbs) 40 PSF Roof Zone
4	2130	2420	2560	2410	2740	2940	2700	3060	3320
5	2660	3020	3190	3020	3420	3670	3370	3830	4150
6	3190	3620	3830	3620	4110	4410	4050	4590	4980
7	3720	4230	4470	4220	4790	5140	4720	5360	5810
8	4250	4830	5110	4820	5480	5880	5400	6120	6640
9	4780	5440	5750	5430	6160	6610	6070	6890	7470
10	5320	6040	6380	6030	6850	7340	6750	7650	8300
Wt. Per Foot See Note 4	532	604	638	603	685	734	675	765	830

NOTES:

1. See Table 4 for minimum footing sizes based on pier loads and allowable soil bearing capacities. The footing sizes and pier loads are minimums required for the applicable conditions. The footing shall not be smaller than the pier it supports of 144 square inches.
2. The maximum spacing of supports is not to exceed 10 feet.
3. Where it is impractical to maintain spacing, such as in the axle area, the average of the distance to each adjacent support may be used to determine support requirements. For example: if the distances to the adjacent supports were 6'-0" and 8'-0", the average spacing would be 7'-0".

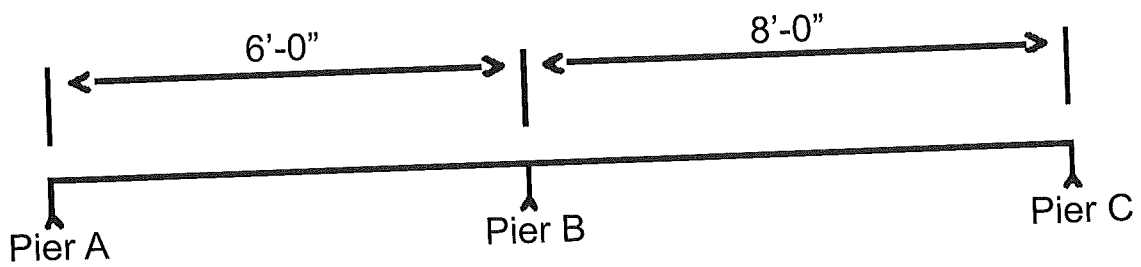

The average spacing for pier B would be (6 + 8) / 2 = 7 ft., therefore, pier B would be designed for 7 ft. pier spacing.

4. The last line in the above Table is the weight per foot each main I-beam is carrying. Multiply this number by the span a pier is carrying to determine the required capacity of that pier.

FOUNDATION AND SUPPORT REQUIREMENTS (Continued)

TABLE 2
PIER LOADING UNDER MAIN I-BEAMS
DOUBLE-WIDE HOMES

Pier Spacing Under Main I-Beams (Ft.)	20' WIDE HOMES			24' WIDE HOMES			26' & 28' WIDE HOMES			32' WIDE HOMES		
	Pier Load (Lbs) 20 PSF Roof Zone	Pier Load (Lbs) 30 PSF Roof Zone	Pier Load (Lbs) 40 PSF Roof Zone	Pier Load (Lbs) 20 PSF Roof Zone	Pier Load (Lbs) 30 PSF Roof Zone	Pier Load (Lbs) 40 PSF Roof Zone	Pier Load (Lbs) 20 PSF Roof Zone	Pier Load (Lbs) 30 PSF Roof Zone	Pier Load (Lbs) 40 PSF Roof Zone	Pier Load (Lbs) 20 PSF Roof Zone	Pier Load (Lbs) 30 PSF Roof Zone	Pier Load (Lbs) 40 PSF Roof Zone
4	1810	2060	2170	2100	2390	2560	2360	2630	2940	2680	3000	3320
5	2270	2580	2710	2630	2980	3190	2950	3350	3670	3350	3750	4150
6	2720	3100	3260	3150	3580	3830	3540	4020	4410	4020	4500	4980
7	3170	3610	3800	3680	4180	4470	4130	4690	5140	4690	5250	5810
8	3630	4130	4340	4200	4770	5110	4720	5360	5880	5360	6000	6640
9	4080	4640	4880	4730	5370	5750	5310	6030	6610	6030	6750	7470
10	4540	5160	5420	5250	5970	6380	5900	6700	7340	6700	7500	8300
Wt. Per Foot See Note 5	454	516	542	525	597	638	590	670	734	670	750	830

NOTES:

1. See Table 4 for minimum footing sizes based on pier loads and allowable soil bearing capacities. The footing sizes and pier loads are minimum required for the applicable conditions. The footing shall not be smaller than the pier it supports of 144 square inches.

2. The maximum spacing of supports is not to exceed 10 feet.

3. Where it is impractical to maintain spacing, such as in the axle area, the average of the distance to each adjacent support may be used to determine support requirements. For example: if the distances to the adjacent supports were 6'-0" and 8'-0", the average spacing would be 7'-0".

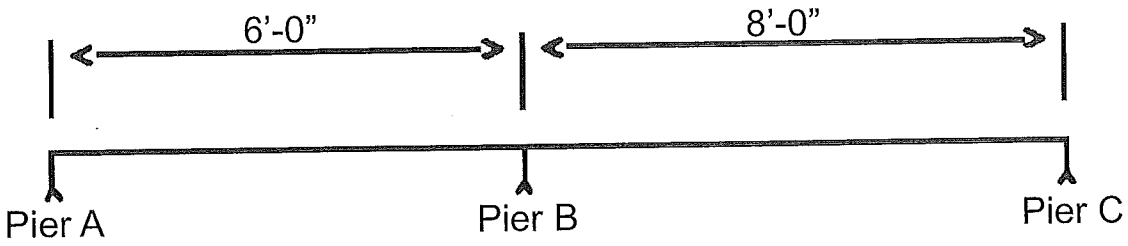

The average spacing for pier B would be (6 + 8) / 2 = 7 ft., therefore, pier B would be designed for 7 ft. pier spacing.

4. Concentrated loads at marriage line (see Table 3).

5. The last line in the above Table is the weight per foot each main I-beam is carrying. Multiply this number by the span a pier is carrying to determine the required capacity of that pier.

FOUNDATION AND SUPPORT REQUIREMENTS (Continued)

TABLE 3
PIER LOADING UNDER CENTERLINE BEAMS
DOUBLE-WIDE HOMES

Span Between Columns (Ft.) See note 1	20' WIDE HOMES			24' WIDE HOMES			26' & 28' WIDE HOMES			32' WIDE HOMES		
	Pier Load (Lbs) 20 PSF Roof Zone	Pier Load (Lbs) 30 PSF Roof Zone	Pier Load (Lbs) 40 PSF Roof Zone	Pier Load (Lbs) 20 PSF Roof Zone	Pier Load (Lbs) 30 PSF Roof Zone	Pier Load (Lbs) 40 PSF Roof Zone	Pier Load (Lbs) 20 PSF Roof Zone	Pier Load (Lbs) 30 PSF Roof Zone	Pier Load (Lbs) 40 PSF Roof Zone	Pier Load (Lbs) 20 PSF Roof Zone	Pier Load (Lbs) 30 PSF Roof Zone	Pier Load (Lbs) 40 PSF Roof Zone
6	900	1200	1500	1080	1440	1800	1260	1680	2100	1350	1800	2250
10	1500	2000	2500	1800	2400	3000	2100	2800	3500	2250	3000	3750
12	1800	2400	3000	2160	2880	3600	2520	3360	4200	2700	3600	4500
14	2100	2800	3500	2520	3360	4320	2940	3920	4900	3150	4200	5250
16	2400	3200	4000	2880	3840	4800	3360	4480	5600	3600	4800	6000
18	2700	3600	4500	3240	4320	5400	3780	5040	6300	4050	5400	6750
20	3000	4000	5000	3600	4800	6000	4200	5600	7000	4500	6000	7500
24	3600	4800	6000	4320	5760	7200	5040	6720	8400	5400	7200	9000

NOTES:
1) Where a column is located between two openings, sum the loads for each opening to obtain the required pier load.
2) See table 4 for minimum footing sizes based on pier loads and allowable soil bearing capacities.
3) The concentrated load consist of roof load only.
4) Pier locations at the marriage wall are marked with paint or metal indicator straps.
5) Piers used side by side to obtain the required load are permissible.

PIER LOADING AND INSTALLATION UNDER SIDEWALL DOORS AND WINDOWS

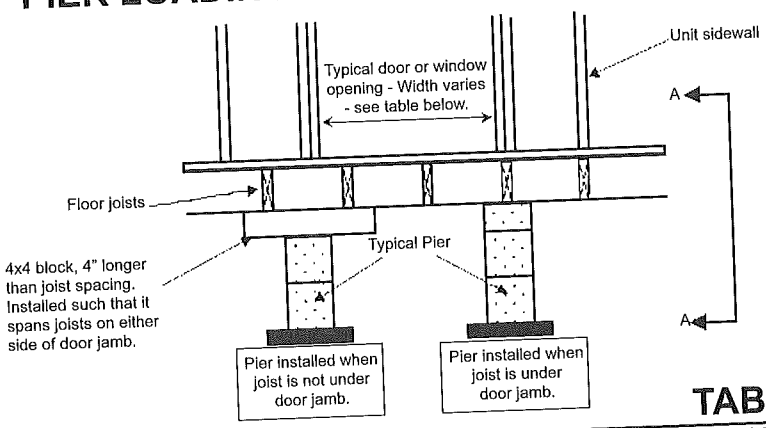

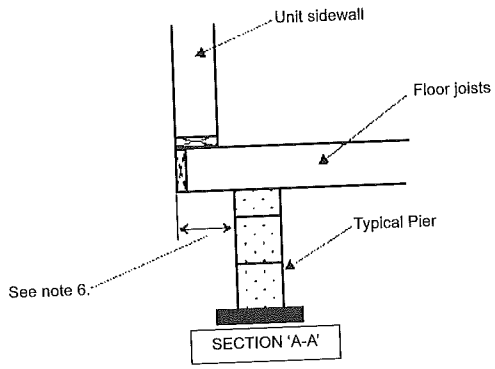

TABLE 3A

Nominal Unit Width (Ft.)	48" OPENING			78.5" MAX. OPENING			108" MAX. OPENING			121" MAX. OPENING		
	Pier Load (Lbs) 20 PSF Roof Zone	Pier Load (Lbs) 30 PSF Roof Zone	Pier Load (Lbs) 40 PSF Roof Zone	Pier Load (Lbs) 20 PSF Roof Zone	Pier Load (Lbs) 30 PSF Roof Zone	Pier Load (Lbs) 40 PSF Roof Zone	Pier Load (Lbs) 20 PSF Roof Zone	Pier Load (Lbs) 30 PSF Roof Zone	Pier Load (Lbs) 40 PSF Roof Zone	Pier Load (Lbs) 20 PSF Roof Zone	Pier Load (Lbs) 30 PSF Roof Zone	Pier Load (Lbs) 40 PSF Roof Zone
12	500	640	790	810	1050	1280	1110	1440	1760	1250	1610	1980
14	550	710	870	890	1160	1430	1230	1600	1960	1370	1780	2200
16	600	780	960	980	1270	1570	1340	1750	2260	1500	1960	2420
18	650	840	1040	1050	1380	1700	1450	1890	2340	1620	2120	2620
20	440	570	690	720	920	1130	990	1270	1550	1100	1420	1730
24	500	640	790	810	1050	1280	1110	1440	1760	1250	1610	1980
26	520	680	830	860	1110	1360	1180	1520	1870	1320	1710	2100
28	540	700	860	880	1140	1400	1210	1570	1930	1350	1750	2160
32	590	760	940	950	1240	1530	1310	1710	2110	1470	1910	2360

NOTES:
1) Piers are required at all entry doors and window openings greater than four feet.
2) Piers are also required at bay windows where the sidewall opening is greater than four feet.
3) Piers are not required at door and window openings located along endwalls.
4) Piers are not required at some door and window locations if the floor has been reinforced at the factory. Contact the division that built your home to determine if this is applicable to your home.
5) See table 4 for minimum footing sizes based on pier loads and allowable soil bearing capacities.
6) Maximum pier setback is 6". If pier load (from table 3A) is 1240 lbs. or less, and nominal unit width is 12', 14', 20', 24', 26', or 28', then setback may be 1 max. If pier load (from table 3A) is 1930 lbs. or less, and nominal unit width is 16', 18', or 32', then setback may be 10" max.
7) For piers between multiple openings, sum the loads for each opening to obtain the required load.

FOUNDATION AND SUPPORT REQUIREMENTS (Continued)

PAVILION DORMER BLOCKING

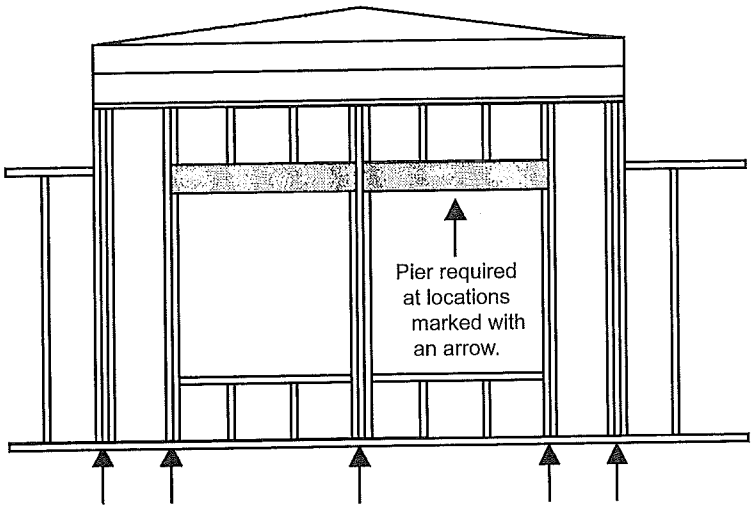

NOTES:
1) All units that have a Pavilion dormer require additional perimeter blocking.
2) Install piers under door/window openings and at each end of Pavilion wall. Install piers 4'-0" o.c. max between end of pavilion wall and door/window opening.
3) See table 3A for required pier capacities under windows or doors.
4) Piers located at each end of wall and spaced 4'-0" o.c. shall support 1300 lbs. min.
5) For roof loads in excess of 40 PSF, install piers per the "Manufactured Home Installation for Perimeter Blocking" supplement.

TABLE 4
FOOTING SIZES

REQUIRED PIER LOAD CAPACITY (POUNDS)	FOOTING SIZES (IN x IN) OR EQUAL AREAS (SQ. IN.)											
	ALLOWABLE SOIL BEARING VALUE											
	1000 PSF		1500 PSF		2000 PSF		3000 PSF		4000 PSF		6000 PSF	
	REQUIRED AREA (SQ. IN)	TYPICAL SIZES (IN.xIN.)	REQUIRED AREA (SQ. IN)	TYPICAL SIZES (IN.xIN.)	REQUIRED AREA (SQ. IN)	TYPICAL SIZES (IN.xIN.)	REQUIRED AREA (SQ. IN)	TYPICAL SIZES (IN.xIN.)	REQUIRED AREA (SQ. IN)	TYPICAL SIZES (IN.xIN.)	REQUIRED AREA (SQ. IN)	TYPICAL SIZES (IN.xIN.)
1500	216	12x20	144	12x20	144	12x20	144	12x20	144	12x20	144	12x20
2000	288	16x20	192	12x20	144	12x20	144	12x20	144	12x20	144	12x20
2500	360	18x20	240	12x20	180	12x20	144	12x20	144	12x20	144	12x20
3000	432	20x22	288	16x20	216	12x20	144	12x20	144	12x20	144	12x20
3500	504	22x24	336	18x20	252	14x20	168	12x20	144	12x20	144	12x20
4000	576	24x24	384	20x20	288	16x20	192	12x20	144	12x20	144	12x20
4500	648	26x26	432	20x22	324	18x20	216	12x20	144	12x20	144	12x20
5000	720	26x28	480	22x22	360	18x20	240	12x20	162	12x20	144	12x20
5500	792	28x30	528	22x24	396	20x20	264	14x20	180	12x20	144	12x20
6000	864	30x30	576	24x24	432	20x22	288	16x20	198	12x20	144	12x20
6500	936	30x32	624	24x26	468	22x22	312	16x20	216	12x20	156	12x20
7000	1008	32x32	672	26x26	504	22x24	336	18x20	234	12x20	168	12x20
7500	1080	32x34	720	26x28	540	24x24	360	18x20	252	14x20	180	12x20
8000	1152	34x34	768	28x28	576	24x24	384	20x20	270	14x20	192	12x20
8500	1224	34x36	816	28x30	612	24x26	408	20x22	288	16x20	204	12x20
9000	1296	36x36	864	30x30	648	26x26	432	20x22	306	16x20	216	12x20
9500	1368	36x38	912	30x32	684	26x28	456	22x22	324	18x20	228	12x20
10000	1440	38x38	960	30x32	720	26x28	480	22x22	360	18x20	240	12x20

TABLE 4A
COMMON FOOTING SIZES AND CAPACITIES

FOOTING SIZE	FOOTING CAPACITY AT VARIOUS ALLOWABLE SOIL BEARING VALUES (Pounds)					
	1000 PSF	1500 PSF	2000 PSF	3000 PSF	4000 PSF	6000 PSF
16"x16"	1780	2665	3555	5335	7110	10665
18"x18"	2250	3375	4500	6750	9000	13500
24"x24"	4000	6000	8000	12000	16000	24000
16"x32"	3555	5335	7110	10665	14220	21335
32"x32"	7110	10665	14220	21335	—	—
12" Round	785	1180	1570	2355	3140	4712
16" Round	1395	2095	2790	4190	5585	8375
18" Round	1765	2650	3535	5300	7070	10600
24" Round	3140	4710	6280	9425	12565	18850
36" Round	7070	10600	14135	21205	—	—

TABLE 4B
MAXIMUM FOOTING SIZE PER FOOTING THICKNESS

	PIER DESCRIPTION	Minimum Footing Thickness 4"	6"	8"	12"
1000 max. PSF Soil Bearing Capacity	Single Concrete Block	30"x30" square 36" round	40"x40" square ——	——	——
	Double Concrete Block	38"x38" square 44" round	48"x48" square ——	——	——
	Single or Double Steel Pier	34"x34" square 40" round	45"x45" square ——	——	——
	Quad steel Pier	46"x46" square ——	——	——	——
2000 PSF max Soil Bearing Capacity	Single Concrete Block	22"x22" square 28" round	30"x30" square 38" round	38"x38" square 48" round	——
	Double Concrete Block	30"x30" square 36" round	38"x38" square 46" round	46"x46" square ——	——
	Single or Double Steel Pier	26"x26" square 32" round	34"x34" square 42" round	42"x42" square ——	——
	Quad steel Pier	38"x38" square 44" round	46"x46" square ——	——	——
3000 max. PSF Soil Bearing Capacity	Single Concrete Block	20"x20" square 24" round	26"x26" square 32" round	32"x32" square 40" round	46"x46" square ——
	Double Concrete Block	28"x28" square 32" round	34"x34" square 40" round	40"x40" square 48" round	——
	Single or Double Steel Pier	24"x24" square 28" round	30"x30" square 36" round	36"x36" square 44" round	——
	Quad steel Pier	36"x36" square 40" round	42"x42" square 48" round	48"x48" square ——	——
6000 PSF max. Soil Bearing Capacity	Single Concrete Block	16"x16" square 20" round	20"x20" square 24" round	26"x26" square 30" round	34"x34" square 42" round
	Double Concrete Block	24"x24" square 28" round	28"x28" square 34" round	34"x34" square 40" round	42"x42" square ——
	Single or Double Steel Pier	20"x20" square 24" round	24"x24" square 30" round	30"x30" square 34" round	39"x39" square 46" round
	Quad steel Pier	32"x32" square 36" round	36"x36" square 42" round	42"x42" square 48" round	48"x48" square ——

Note:
1. Concrete blocks are 8"x16" minimum.
2. Steel piers have 12" square base minimum.
3. Double steel pier may not be used on this footing.

CHAPTER 5

SET-UP PROCEDURES

WARNING: WHEN SETTING UP THIS HOME, THE FOLLOWING PRECAUTIONS REGARDING JACKING MUST BE FOLLOWED.

Moving Home To Location: Make sure the following items are completed before placing the home:

- The site is properly prepared. See Chapter 3.
- All concrete work necessary to setting the home is finished.
- Utilities are installed or available.
- Any trenching, for crossover drain lines or for wheels that will be left in place, is complete.
- Items that could be difficult to install after the home is sited (such as anchors and ground moisture retarders) are in their proper locations.

CAUTION: THE HOME WEIGHS SEVERAL TONS. USE ADEQUATE TEMPORARY SUPPORT BLOCKING TO SAFEGUARD WORKERS. SKYLINE CORP. RECOMMENDS WOOD BLOCKING.

Positioning Home. When not placing the home on a concrete slab or poured-in-place footings, mark the corners of the home and lay out footings and support devices close to where they will be used. Then move the home or first section into position.

Leveling and Blocking — Single-Wide Homes.

1. Before doing any jacking, place support piers for the home in the location under the home as specified in the home installation instructions.

2. Use a minimum of two jacks, each with a rating of at least ten tons.

3. Jack only on the main chassis I-beam. Locate the jack directly under the vertical web of the I-beam. Do not jack on the seam (joint between flanges) of a twin I-beam.

4. Use a large 3/8 inch thick steel plate, C-channel or other equivalent plate between the main chassis I-beam and the jack head to distribute the load.

5. The jack base and any blocking must be located on firm ground.

6. Do not operate the jacks while you are under the main I-beams of the home.

7. Use jacks only for raising the home. Do not rely on the jacks to support the home.

8. Place 4" x 6" x 48" min. safety timbers between the I-beams and ground in case of jack failure. Timber should be hardwood.

9. Raise the home in small increments and provide additional blocking between the home and the piers and safety piers as the home is raised.

10. Do not go under the home while it is supported on the jacks unless safety timbers capable of supporting the home are in place.

FAILURE TO FOLLOW THESE WARNINGS MAY RESULT IN SERIOUS INJURY OR DEATH.

Reminders before jacking...

1. Use only jacks in good condition with a minimum rating of 10 tons.

2. Use a minute man C-Channel jacking plate or equivalent between jack and steel I-beam to distribute the concentrated loads. (See Figure 5-1)

3. Use a firm support under the jack base to prevent tipping or settling of the jack. Skyline recommends a 12" x 12" or larger pad.

4. Always follow the sequence of jacking outlined below to avoid overstressing structural members.

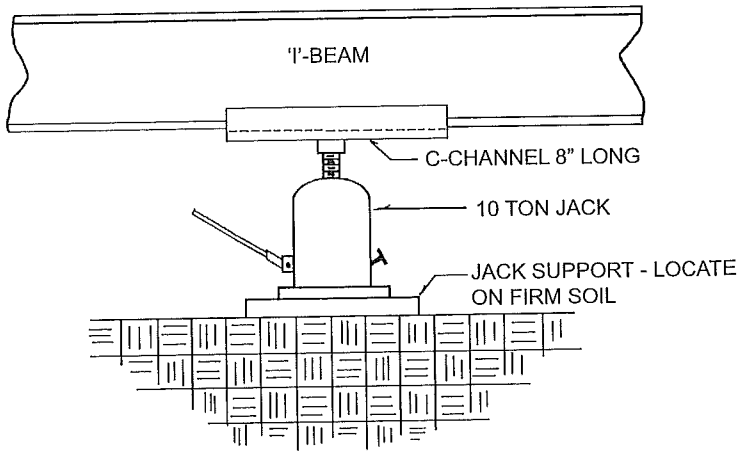

FIG. 5-1

SET-UP PROCEDURES (Continued)

The jacking procedure is as follows:

1. After the home is located in its final position, you can preliminarily level it by using the hitch jack but only after adequately wheel blocking the home so it does not roll.

2. Jack up one side of the home by placing one jack just forward of the front spring hanger and the other just behind the rear spring hanger. These two jacks must be operated simultaneously to raise the home. Jack low side of the home first. Install footings and piers; one just forward of the front jack and another just behind the rear jack (taking care not to exceed the correct spacing selected from Table 1 or 2).

3. Next, jack the main I-beam at the front and position a pier within 2'-0" of the end of the I-beam. At the completion of this step, this side of the home should be approximately level.

4. Repeat Steps 2 and 3 for the other side of the home. At the completion of this step, the home should be roughly level from front to rear and from side to side.

5. Place the remaining pier supports under the main I-beam on each side taking care to maintain a maximum distance of no more than the spacing determined from Tables 1 or 2 with piers located with 2"-0" of each end of each I-beam. (See Fig. 5-2)

6. Level the home within reasonable tolerances, using a 6 foot carpenter's level, water level, or similar equipment. The final height adjustment is obtained by jacking the I-beam and placing hardwood shims between the piers and I-beam, or other approved methods such as adjustable piers. THIS LEVELING PROCESS IS IMPORTANT FOR APPEARANCE AND IS ESSENTIAL FOR THE PROPER OPERATION OF DOORS, WINDOWS, AND THE DRAINAGE SYSTEM.

7. Place additional supports at each side of sidewall door and window openings over 4'0" wide. (See Table 3A)

8. Within 90 days after initial set-up, the home should be releveled, if necessary to compensate for any pier settlement. Follow the procedure in Item 6 above.

NOTE: DURING THE LEVELING OR RELEVELING PROCESS, LOOSEN FRAME TIES AND OVER-THE-ROOF TIES (IF PROVIDED) PRIOR TO JACKING HOME.

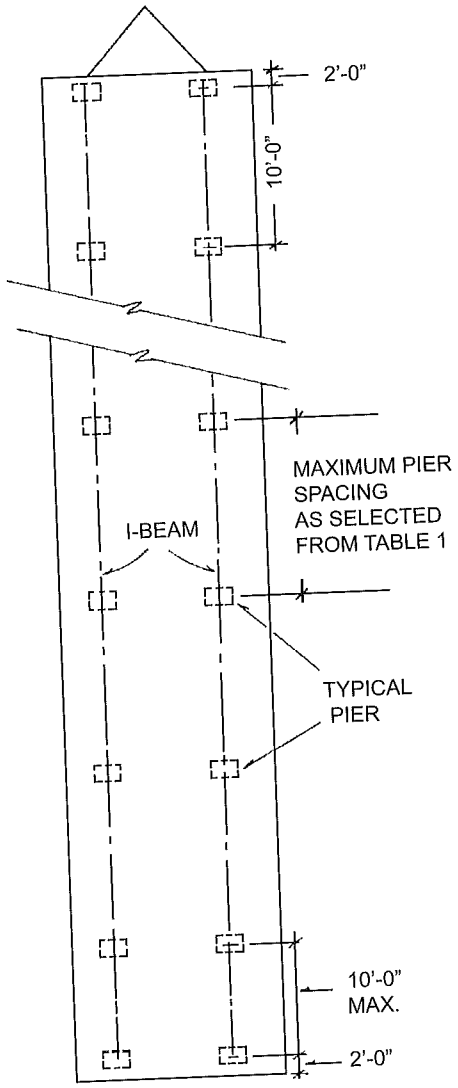

FIG. 5-2

LEVELING AND BLOCKING, DOUBLE-WIDE HOMES

With the exception of the requirement for support under the marriage wall of double-wide units, leveling and blocking procedures are the same as for single-wide units. The site must be prepared as previously described. Special consideration must be given to the footings and pier construction required by (1) local soil conditions, (2) depth of frost line and (3) special requirements for local jurisdictions. It may be desirable to construct the footings and piers (to grade height) prior to moving the home to its final location. Preconstruction of the footings and piers to grade may be accomplished by referring to the pier location diagram, Figure 5-4, making special note of the additional piers required at centerline beam supports. If there are questions regarding pier locations, please contact the division for aid. Piers located at the centerline may carry much higher loads than other pier locations.

PROPER BLOCKING OF THE CENTERLINE BEAM IS VITAL TO THE PERFORMANCE OF A DOUBLE-WIDE HOME.

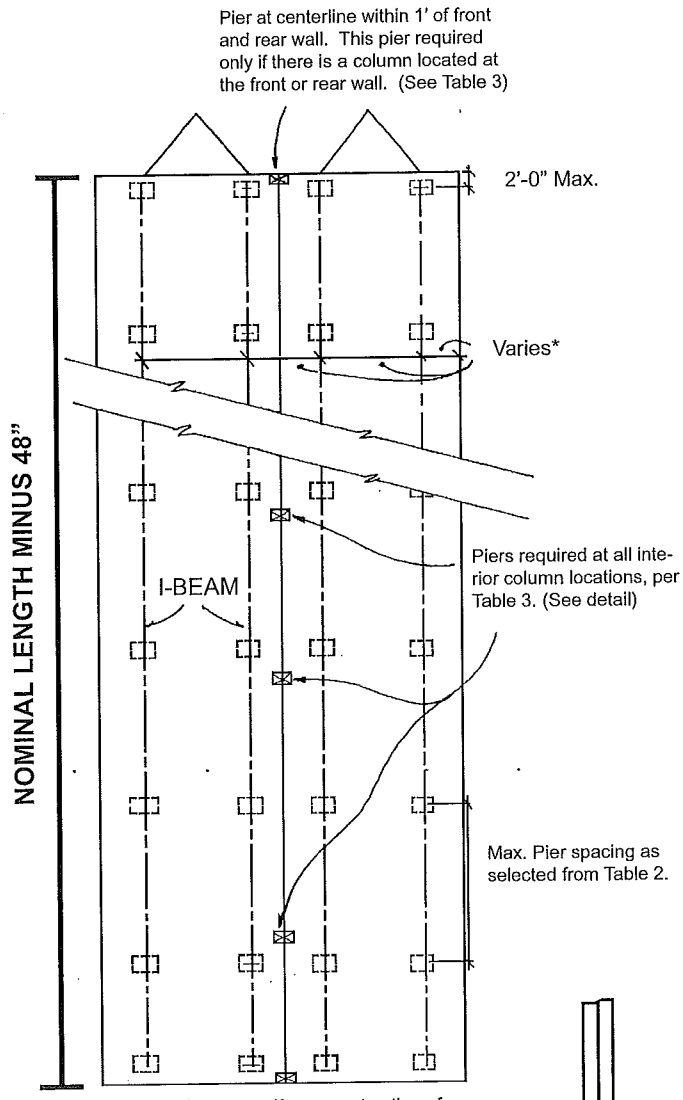

*Dimensions vary. If pre-construction of footing is desired, contact the Skyline division that manufactured the unit for applicable dimensions.

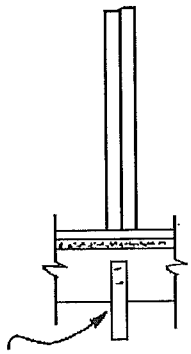

Centerline Support pier location indicator-Metal strap or centerline joist marked with paint beneath home or label indicating pier location.

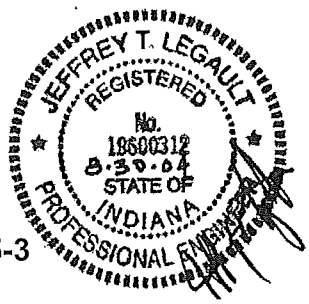

FIG. 5-3

FIG. 5-4

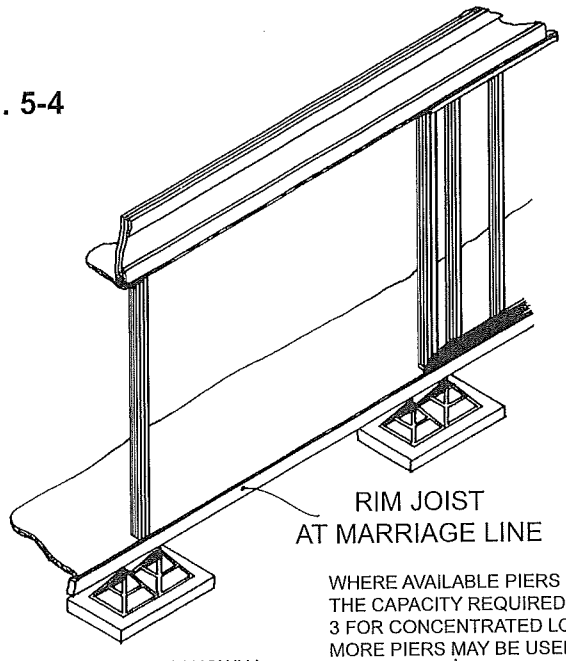

FOOTINGS AND PIERS SHOWN FOR ILLUSTRATIVE PURPOSES ONLY — ANY APPROVED SYSTEM MAY BE USED.

WHERE AVAILABLE PIERS DO NOT HAVE THE CAPACITY REQUIRED BY TABLE 3 FOR CONCENTRATED LOADS-2 OR MORE PIERS MAY BE USED. THE SUM OF PIER CAPACITIES AT EACH SUPPORT POINT SHALL BE AT LEAST EQUAL TO THE LOADS SPECIFIED IN TABLE 3.

FIG. 5-5

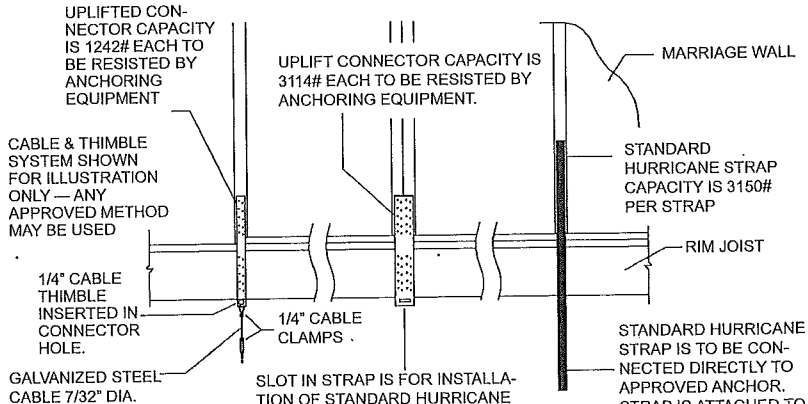

TYPICAL MARRIAGE WALL STRAPS

SET-UP PROCEDURES (Continued)

INSTALLATION OF "ADJUSTABLE OUTRIGGER"

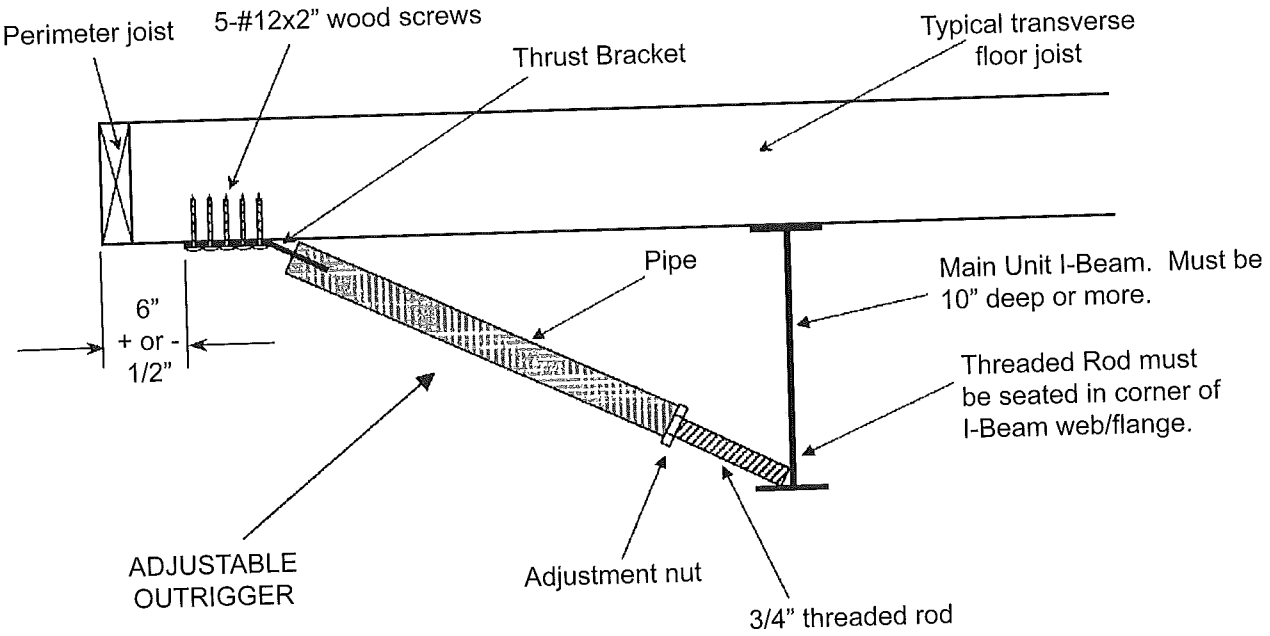

INSTALLATION INSTRUCTIONS

1. Locate the floor joist that requires support.
2. Mark I-beam directly under the floor joist to align "Adjustable Outrigger".
3. Adjust nut on threaded rod so it clears the frame flange for easy adjustment.
4. Set threaded rod in the pipe and against the frame.
5. Set thrust bracket on the floor joist and secure it with five #12 x 2" screws. If there is insulation installed between bottom board and floor joist, cut a small slit in the bottom board and insulation. Move the insulation away from the area where the thrust bracket is to be installed. Install bracket and repair bottom board with provided bottom board tape.
6. Adjust proper pressure by tightening the nut, until the perimeter joist is square and level.
7. If the "Adjustable Outrigger" is to be exposed to the weather after installation, or installed in highly corrosive environment, then it shall be painted with an exterior grade paint.

NOTES:

1. The "Adjustable Outrigger" is intended as an alternate to perimeter piers at door and window openings. Page 6 of this manua requires perimeter piers at sidewall door and window openings that are 4 feet wide or wider.
2. The "Adjustable Outrigger" is to be installed at the building site at time of setup. It may be factory supplied and shipped loose or purchased separately by the dealer. The thrust bracket is listed by Preferred Construction Inspections (#1055-11). The threaded rod meets ASTM standard A307-1994 and the nut meets ANSI/ASME standard B18.2.2-1986. All necessary parts for the "Adjustable Outrigger" assembly are included in the package, and are purchased together.
3. The maximum load carrying capacity of the "Adjustable Outrigger" is 1400 lbs. See page 15, Table 3A for required pier loads door and window openings.
4. These instructions are applicable ONLY to "The Adjustable Outrigger" manufactured by Manufactured Housing Foundations Systems Inc. (A subsidiary of Oliver Technologies, Inc.)
5. The "Adjustable Outrigger" is to be temporarily removed if the home is to be retransported, and then reinstalled after setup.
6. The "Adjustable Outrigger" is not available for use on 18' singlewides, 14' singlewides with 75.5" I-Beam spacing or 16' single wides with 82.5" or 75.5" I-Beam spacing.

FIG. 5-6
USE OF WATER LEVEL

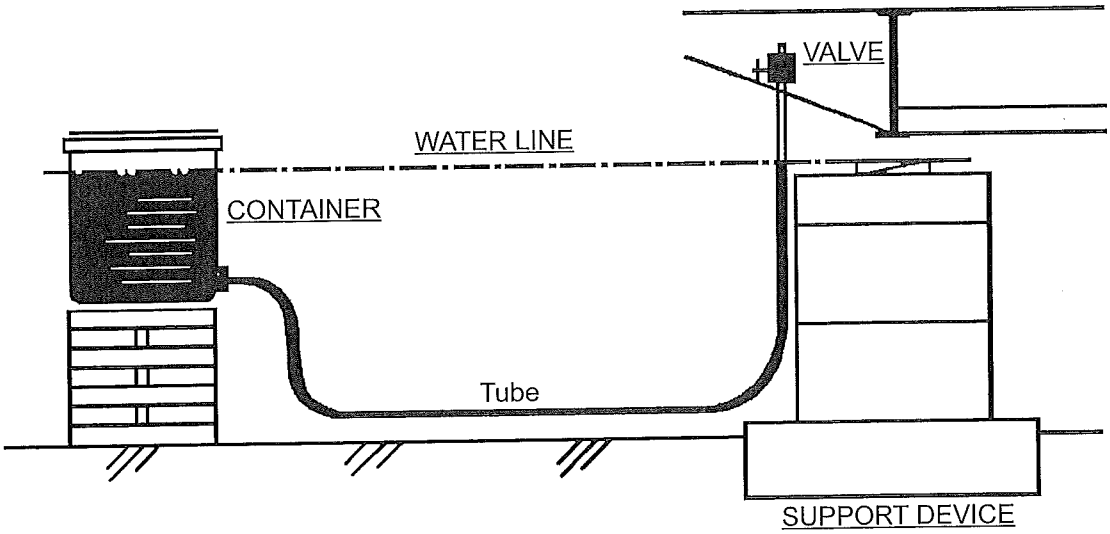

MATERIAL TO MAKE LEVEL

- Five Gallon Pail with Lid
- Plastic Tubing — 100 feet x 3/8" or 1/2"
- Cork — 1-1/2"
- Male Barbed Fitting — 3/8" x 3/4"
- Steel Washer — 7/8"
- Nut — 3/4"
- Female Barbed Fitting — 3/8" x 1/2"
- Male Valve — 1/2"
- Pipe Sealant
- Food Coloring — 8 oz.

"HOW TO USE A WATER LEVEL"

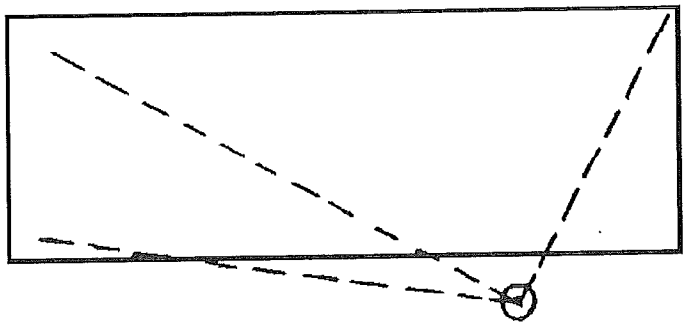

PLACE AT ANY POINT AROUND HOME

Unroll Tubing: Position level where it is to be used. Take care not to have kinks in it, step on it or lay anything on it.

Check for Air Bubbles: To remove any lower valve below bottom of container and open. Close valve when they are out.

Container Location: Located so valve can reach all areas of home. Build up container so water line in valve end of tubing is at the predetermined height support devices will be set.

Leveling of Support Device: Secure valve above determined height and open. Adjust device as needed. Close valve and move to next support device.

NOTE: Level all support devices before lowering home.

DOUBLE-WIDE INTERCONNECTION

The procedure for connecting the homes is as follows.

1. Remove the temporary closure materials (polyethylene and batten strips) and position the halves as close together as possible in the final desired location. Do not remove temporary beam supports until step 7 has been completed.

2. Move the first section of home into its desired position. Block and level it in the same manner as described for a single section home. Skyline Corp. recommends, if possible, the heavy half be blocked and leveled first as it is easier to lift and roll the light half and fit into place.

3. Install sill sealer insulating material (provided) around the ceiling (to the ridge beam at the ceiling panel line), endwalls and floor mating line. Fasten sill sealer with staples or nails. See figure 5-8A.

4. Slide the two halves together with rolling and jacking equipment. Care must be taken during rolling and jacking operations to avoid overstressing structural members. With the halves together at the floor, align the floors at the ends of the home. It is better to have a minor misalignment under the siding where it cannot be seen and will not cause a problem, than a small misalignment that will be observed in the interior of the home.

5. With the home aligned at the floor and supported by its foundation, join the floors using 3/8" x 3" (4-1/2" lags with double perimeter joist) lag screws 2 to 3 feet on center. A gap between halves up to 1" is allowable. Gaps larger than 1/2" must be filled with plywood or lumber shims. For 1/2" max gaps, increase fastener length 1". Use the procedures outlined on page 16 to level the home and check supports and footings with tables 2 and 3.

6. To obtain access into the ceiling cavity to bolt or alternately lag screw the ridge beam sections together, fold back the underlayment paper and remove the 16" wide sheathing panel(s) at the peak. Note that the shingles may not have been installed on one or both halves, at the 16" wide area at the peak. If one side is shingled, it is intended that the beams be lag screwed together. If neither side is shingled, the beam may be lag screwed or bolted together. Bolts to be 3/8" x 4-1/2". Lag screws to be 3/8" x 5". Install lag screws or bolts at 24" o.c. with 6 additional lag screws at 3" o.c. over interior beam supports. (If marriage walls and ridge beam halves have been plated with 3/8" sheathing, then the bolts or lags must be increased in length by 3/4" to 5-3/4".) Predrill 1/4" pilot holes for the lag screws at 1-1/2" down from the top of the beam and with a maximum offset from the horizontal of 45 degrees. A gap between beam halves up to 1" is allowable. Gaps larger than 1/2" must be filled with plywood or lumber shims. For 1/2" max gaps, increase fastener length 1/2". For 1" max. gaps increase fastener length 1-1/4". See Fig. 5-7.

7. Prior to interconnecting the ridge beam halves, examine the ridge beam ends. Should there be a slight misalignment, it can be eliminated by placing a jack under the low side of main beam on one half and use the jack to raise the beam. The alignment can be held by properly bolting or lag screwing the beam halves together. See Fig. 5-8.

8. Place additional pier supports at the centerline at the interior column locations marked on the floor with indicator straps or paint (see Figure 5-3 and 5-4 and Table 3). Skyline Corp. provides pier location diagrams for all multiwide models. These diagrams show the required locations of piers and are very useful in determining pier placement prior to taking receipt of home. Additional piers are required each side of exterior doors and sidewall openings greater than 4' in width. See Table 3A for these pier load requirements.

9. Toe-nail endwall centerline studs together using 16d nails 10" o.c.

10. If home has double mating walls, then fasten the mating wall columns together with #8 x 4" screws 16" o.c. Shim any gaps at columns with plywood or lumber and increase fastener length to achieve min. penetration. See Figure 5-7A.

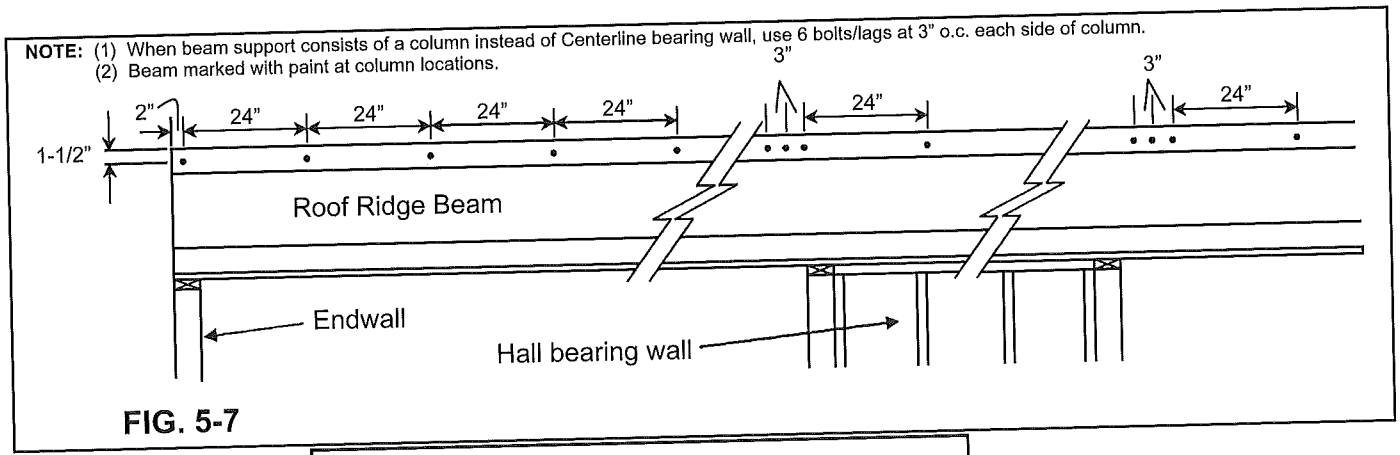

FIG. 5-7

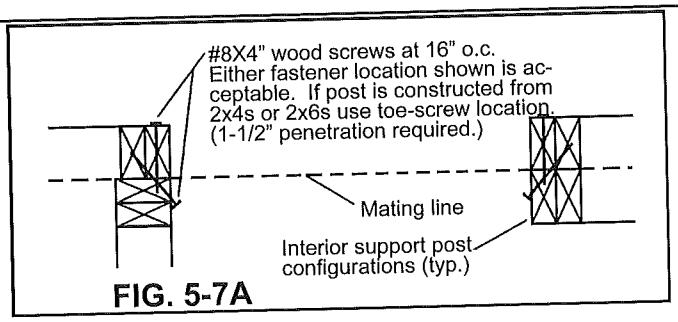

FIG. 5-7A

DOUBLE-WIDE INTERCONNECTION (Continued)

NOTE: IT IS IMPORTANT TO HAVE ROOF/CEILING SECTIONS FLUSH AT MATING LINE PRIOR TO FASTENING OF RIDGE BEAM HALVES. IF THEY ARE NOT FLUSH, THEN THE LOW SIDE SHOULD BE RAISED BY JACKING WITH A WOOD POST OR STEEL PIPE WITH A WOOD OR METAL PAD AT THE CEILING. PLACE THE BASE OF THE JACK ACROSS THE FLOOR MATING LINE SO THAT IT RESTS ON BOTH HALVES. JACK AGAINST CEILING ONLY IN AREAS WHERE THERE IS NO MARRIAGE WALL.

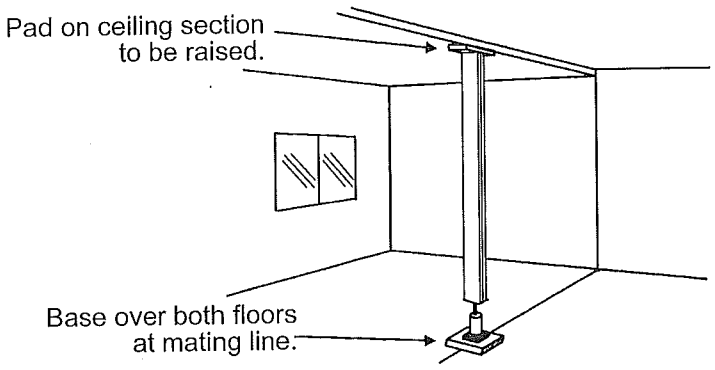

FIG. 5-8

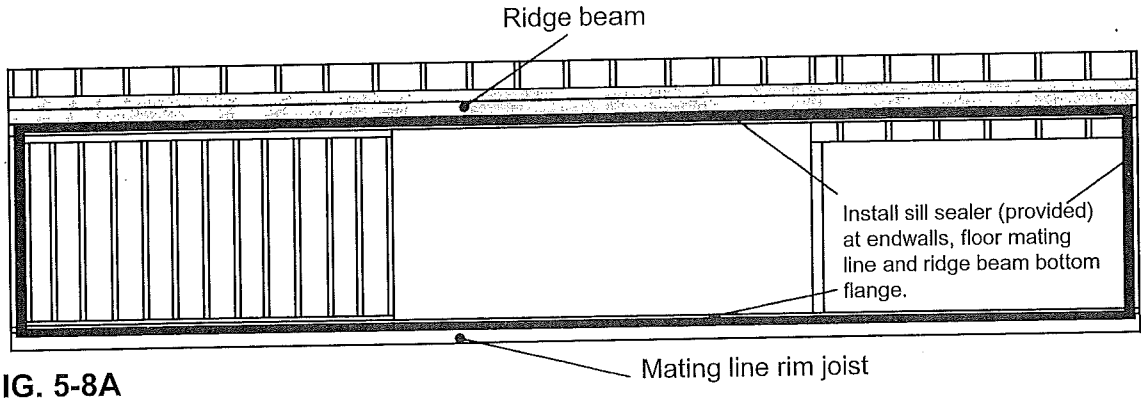

FIG. 5-8A

ATTACHMENT OF GYPSUM PANELS AT DOUBLE-WIDE CENTERLINE

Some multiple-wide units will have a gypsum panel left off at the centerline for field attachment. Fasten the factory supplied gypsum wallboard panel(s) at the center of the endwalls after the units have been attached. Fasten the panel(s) to the wall framing as described in figure 5-8B below.

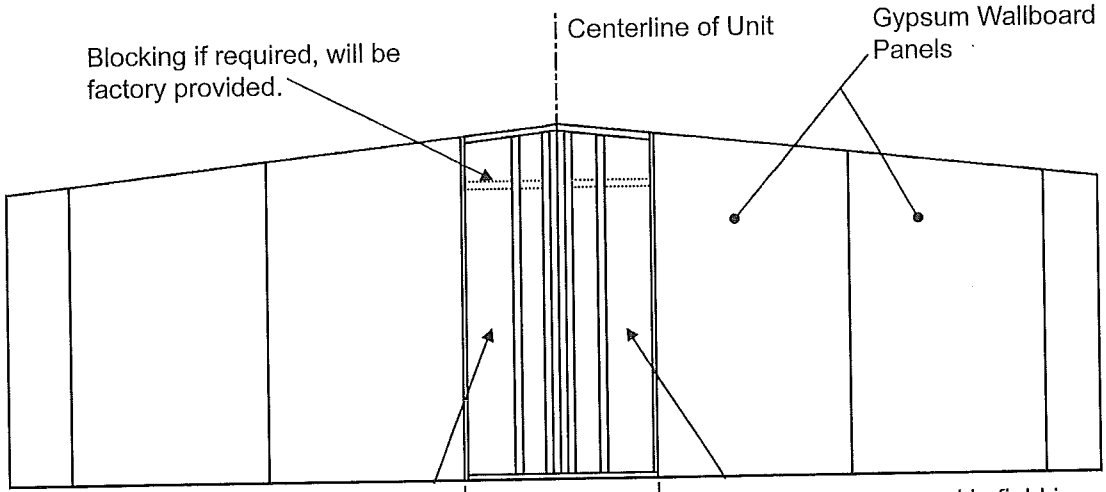

INTERIOR VIEW

FIG. 5-8B

MANUFACTURED HOME TIE-DOWN INSTRUCTIONS

The support system must also resist lifting, sliding, and overturning forces resulting from side winds. A method used is to install ground anchors and tie-down straps in addition to the piers. Tie-downs as described are the minimum necessary if the home is to withstand its design loads without dislocation. On multi-section homes, sections must be fastened together and level before tie-down straps are installed.

WARNING
BEFORE GROUND ANCHOR INSTALLATION, DETERMINE THAT THE ANCHOR LOCATIONS AROUND THE HOME WILL NOT BE CLOSE TO ANY UNDERGROUND ELECTRICAL CABLES, WATER LINES OR SEWER PIPING. FAILURE TO DETERMINE THE LOCATION OF UNDERGROUND ELECTRICAL CABLES MAY RESULT IN SERIOUS PERSONAL INJURY OR DEATH.

NOTE: IN THE FRAME TIE-DOWN SYSTEM, IT IS IMPORTANT TO USE MATERIALS OF PROPER DESIGN AND OF ADEQUATE QUALITY. THE MATERIAL SPECIFICATIONS CONTAINED HEREIN SHOULD BE CONSIDERED AS *MINIMUM* REQUIREMENTS.

Materials not furnished with the home which will be necessary to complete the tie-down system must meet the requirements set forth below. Such materials would include:

1. Cable or steel strap with a breaking strength of at least 4,725 pounds e.g. galvanized aircraft cable at least 1/4" diameter or Type 1, Finish B, Grade 1 steel strapping 1-1/4" wide and 0.03" thick, conforming with ASTM D3953-91.

2. Galvanized connection devices such as turnbuckles, eyebolts, strap buckles, and cable clamps should be rated at 3,150 working load minimum.

3. Ground anchors — capable of withstanding at least a 4,725 pound pull. Anchors must be installed as specified by the anchor manufacturer. Stabilizers or concrete collars may be required by anchor manufacturer.

THE HOME MUST BE IN ITS FINAL LEVEL POSITION PRIOR TO TYING IT DOWN.

The procedure for tying down the manufactured home is as follows:

1. Position and install the ground anchors under exterior walls so that the final strap angle and height (H) will be within the limits shown in tables 5 thru 6C.

2. Connect the straps to the frame and ground anchors (See Figs. 5-9 and 5-10). Straps wrapped around the I-Beam as shown in Fig. 5-9 require protection from premature failure due to sharp corners. Fig. 5-9A illustrates one method to protect against sharp corner damage. Other methods (such as beam clamps — Tie-Down Engineering part no. 59003 or equivalent) approved by the local building authority having jurisdiction may be used.

3. Tighten the straps using the tensioning device provided with the ground anchors. Use caution to avoid overtensioning the straps which might pull the home off the piers. It is recommended that all straps be tightened only enough to remove slack. Then, after all straps are installed and the slack removed, tension the straps.

4. The strap tension should be rechecked at frequent intervals until all pier settlement has stopped.

CAUTION: DURING THE RELEVELING PROCESS, DO NOT JACK THE HOME AGAINST TIGHT STRAPS.

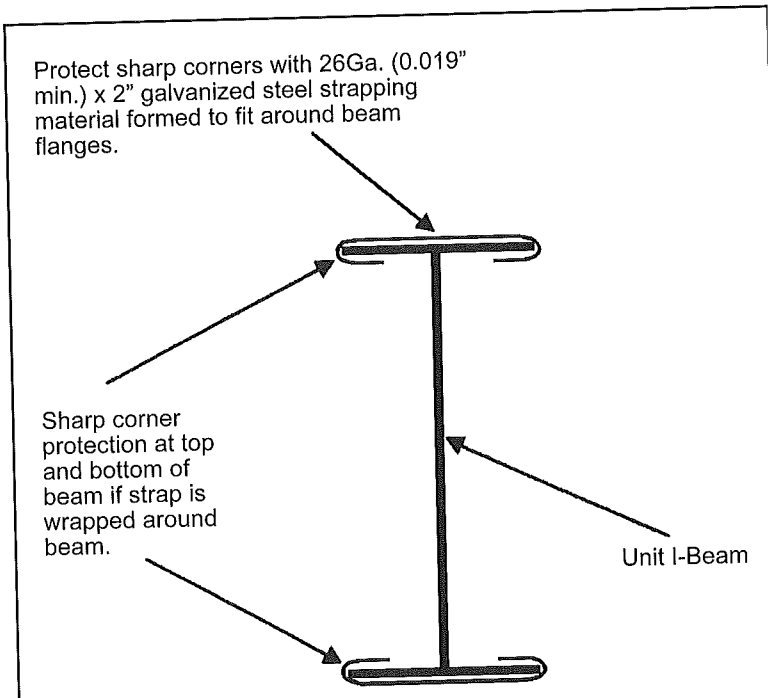

FIG. 5-9A

MANUFACTURED HOME TIE-DOWN INSTRUCTIONS (Continued)

OPTIONAL OVER-THE-ROOF STRAP PROCEDURE

If over-the-roof straps are provided (optional on all homes) they may be connected to ground anchors as specified in the following procedure in order to achieve additional stability in extreme winds. Note that the frame tie-down procedure on page 25 is still mandatory.

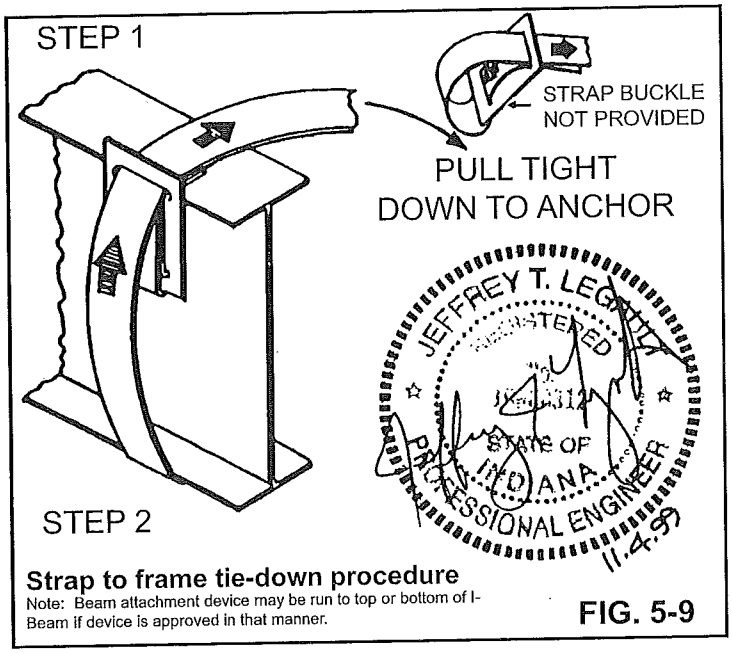

Strap to frame tie-down procedure
Note: Beam attachment device may be run to top or bottom of I-Beam if device is approved in that manner.

FIG. 5-9

Materials not furnished with the home which will be necessary to properly connect the over-the-roof straps are:
1. Ground anchors capable of withstanding at least 4,750 pound pull when installed in the soil at the site.
2. Strap end connection devices (See Fig. 5-10).

THE HOME MUST BE IN ITS FINAL LEVEL POSITION WITH FRAME TIES INSTALLED BEFORE CONNECTING THE OVER-THE-ROOF STRAPS.

The procedure for over-the-roof strap installation is as follows:
1. Position and install the ground anchors so that the strap will be vertical after attachment to the anchor. The anchor may be installed slightly beneath the home to avoid interference with skirting (See Fig. 5-11).
2. Insert the minuteman connector yoke through the eye in the anchor and insert slotted bolt through the yoke.
3. Place end of strap through slotted bolt and remove slack by turning bolt. DO NOT TENSION UNTIL BOTH ENDS OF STRAP ARE CONNECTED.
4. Tension and lock minuteman connector in position; consult instructions furnished with connectors.
5. Check strap tension (See step 4 under frame tie-down procedure).
6. For double-wide homes see Fig. 5-12 for the splice connection at the centerline.

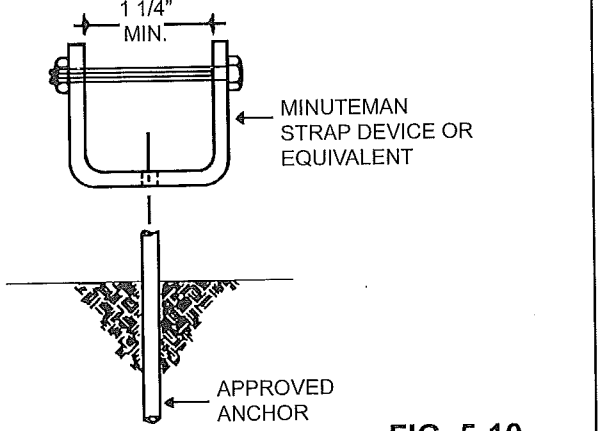

FIG. 5-10

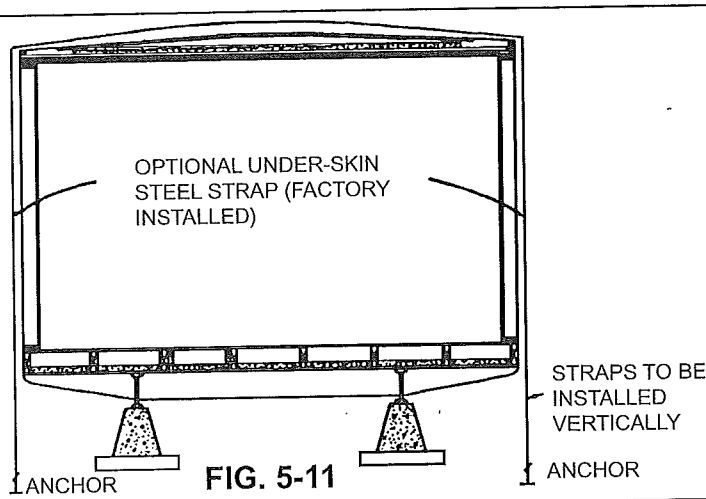

FIG. 5-11

1. Insert end of the strap through the slat on the splice device, allowing 15" of strap to extend through the device.
2. Make a 180 degree bend in the strap and slide a strap seal over the double thickness of strap, positioning the strap seal as close to the splice device as possible. Compress the strap seal on the strap with a pair of vise grip pliers or hammer, or crimp strap seal with an A-B Chance crimping tool. (Make all bends in the strap as sharp as possible by crimping with vise grip or larger pliers).
3. Bend strap back over the seal and insert back through the slot on the splice device. Flatten bend with vise grip pliers or hammer.
4. Repeat steps 1 through 3 with the mating strap. Draw the completed assembly down to the ridge beam by tensioning the strap in the ground anchor.

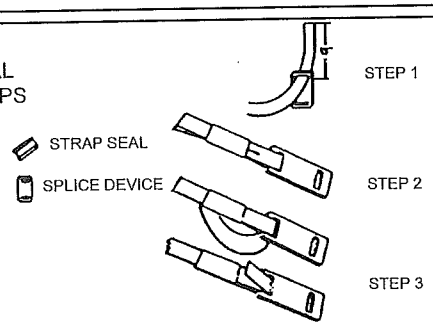

FIG. 5-12

TABLE 5
STRAP ANGLE TABLE FOR STANDARD HEIGHT PIERS - WIND ZONE 1

SINGLE-WIDES

	ANCHORS/STRAPS 12' O.C.	ANCHORS/STRAPS 14' O.C.
MIN STRAP ANGLE	18 DEGREES	22 DEGREES
MAX. STRAP ANGLE	47 DEGREES	37 DEGREES

DOUBLE-WIDES

	ANCHORS/STRAPS 12' O.C.	ANCHORS/STRAPS 14' O.C.
MIN STRAP ANGLE	8 Degrees, 10.5 Degrees for 32' Wides	8 Degrees, 12.5 Degrees for 32' Wides
MAX. STRAP ANGLE	43 Degrees, 54.5 Degrees for 32' Wides	33 Degrees, 47 Degrees for 32' Wides

DOUBLE-WIDES WITH 5/12 ROOF PITCH

	ANCHORS/STRAPS 8' O.C.	NA
MIN STRAP ANGLE	7.8 Degrees, 9.2 Degrees for 24' Wides, 4.9 Degrees for 32' Wides	-
MAX. STRAP ANGLE	40.3 Degrees, 43.0 Degrees for 24' Wides, 37.3 Degrees for 32' Wides	-

DOUBLE-WIDES WITH 7/12 ROOF PITCH

	ANCHORS/STRAPS 6' O.C.	NA
MIN STRAP ANGLE	21.7 Degrees, 10.4 Degrees for 32' Wides	-
MAX. STRAP ANGLE	48.3 Degrees, 41.0 Degrees for 32' Wides	-

MIN./MAX. PIER HEIGHTS FOR STANDARD HEIGHT PIERS - WIND ZONE I

SINGLE-WIDES

		WIND ZONE I					
		ANCHORS/STRAPS 12' O.C.			ANCHORS/STRAPS 14' O.C.		
MAIN I-BEAM SPACING (in)		75.5	82	99.5	75.5	82	99.5
12 ft WIDES	H MIN (in)	12	12	12	13	12	12
	H MAX (in)	36	32	23	25	34	16
14 ft WIDES	H MIN (in)	14	12	12	17	13	12
	H MAX (in)	48	44	35	34	31	25
16 ft WIDES	H MIN (in)	16	13	12	19	15	12
	H MAX (in)	60	56	47	42	40	33
18 ft WIDES	H MIN (in)	-	-	12	-	-	-
	H MAX (in)	-	-	58	-	-	-

DOUBLE-WIDES

		WIND ZONE I					
		ANCHORS/STRAPS 12' O.C.			ANCHORS/STRAPS 14' O.C.		
MAIN I-BEAM SPACING (in)		75.5	82	99.5	75.5	82	99.5
20 ft WIDES	H MIN (in)	12	-	-	12	-	-
	H MAX (in)	23	-	-	14	-	-
24 ft WIDES	H MIN (in)	12	12	12	12	12	12
	H MAX (in)	36	32	23	22	19	14
26 ft WIDES	H MIN (in)	12	12	12	12	12	12
	H MAX (in)	42	39	30	25	23	18
28 ft WIDES	H MIN (in)	12	12	12	12	12	12
	H MAX (in)	48	45	35	29	27	21
28 ft WIDES	H MIN (in)	-	-	12	-	-	12
	H MAX (in)	-	-	35	-	-	43

For doublewides with 8' ceiling height and Wind Zone I, subtract 5" from max. pier height and 5 degrees from max. strap angle. Not applicable to 5/12 or 7/12 roof models.

DOUBLE-WIDES WITH 5/12 ROOF PITCH

		ANCHORS/STRAPS 8' O.C.			NA		
MAIN I-BEAM SPACING (in)		75.5	82	99.5	75.5	82	99.5
24 ft WIDES	H MIN (in)	12	12	-	-	-	-
	H MAX (in)	28	25	-	-	-	-
28 ft WIDES	H MIN (in)	-	-	12	-	-	-
	H MAX (in)	-	-	27.5	-	-	-
32 ft WIDES	H MIN (in)	-	-	12	-	-	-
	H MAX (in)	-	-	30.5	-	-	-

DOUBLE-WIDES WITH 7/12 ROOF PITCH

		ANCHORS/STRAPS 6' O.C.			NA		
MAIN I-BEAM SPACING (in)		75.5	82	99.5	75.5	82	99.5
28 ft WIDES	H MIN (in)	-	-	12	-	-	-
	H MAX (in)	-	-	34	-	-	-
32 ft WIDES	H MIN (in)	-	-	12	-	-	-
	H MAX (in)	-	-	35	-	-	-

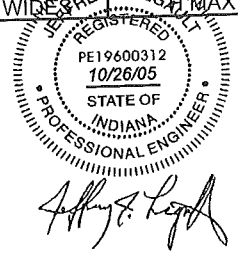

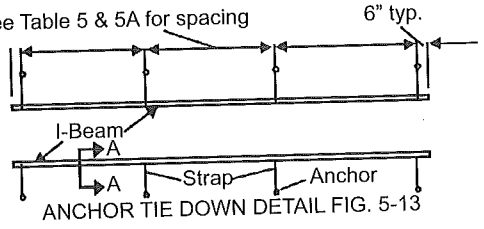

ANCHOR TIE DOWN DETAIL FIG. 5-13

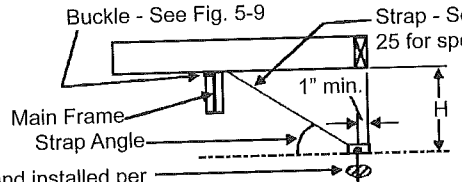

Anchor rated and installed per Anchor manufacturer's instructions **SECTION A-A**

TABLE 5A
STRAP ANGLE TABLE FOR HIGHER THAN STANDARD PIERS
SINGLE-WIDES WIND ZONE I

	WIND ZONE I	
	ANCHORS/STRAPS 8' O.C.	ANCHORS/STRAPS 6' O.C.
MIN. STRAP ANGLE	18 DEGREES	-
MAX. STRAP ANGLE	63 DEGREES	-

DOUBLE-WIDES

	ANCHORS/STRAPS 8' O.C.	ANCHORS/STRAPS 6' O.C.
MIN. STRAP ANGLE	6 Degrees, 7 Degrees for 32' Wides	4 Degrees, 5.5 Degrees for 32' Wides
MAX. STRAP ANGLE	63 Degrees, 67 Degrees for 32' Wides	70 Degrees, 73 Degrees for 32' Wides

MIN./MAX. PIER HEIGHTS FOR HIGHER THAN STANDARD PIERS
SINGLE-WIDES WIND ZONE I

		WIND ZONE I					
		ANCHORS/STRAPS 8' O.C.			ANCHORS/STRAPS 6' O.C.		
MAIN I-BEAM SPACING (in)		75.5	82	99.5	75.5	82	99.5
12 ft WIDES	H MIN (in)	12	12	12	-	-	-
	H MAX (in)	66	59	42	-	-	-
14 ft WIDES	H MIN (in)	14	13	12	-	-	-
	H MAX (in)	72	72	64	-	-	-
16 ft WIDES	H MIN (in)	18	17	14	-	-	-
	H MAX (in)	72	72	72	-	-	-
18 ft WIDES	H MIN (in)	-	-	18	-	-	-
	H MAX (in)	-	-	72	-	-	-

DOUBLE-WIDES

		ANCHORS/STRAPS 8' O.C.			ANCHORS/STRAPS 6' O.C.		
MAIN I-BEAM SPACING (in)		75.5	82	99.5	75.5	82	99.5
20 ft WIDES	H MIN (in)	12	-	-	12	-	-
	H MAX (in)	42	-	-	60	-	-
24 ft WIDES	H MIN (in)	12	12	12	12	12	12
	H MAX (in)	67	60	43	72	72	60
26 ft WIDES	H MIN (in)	12	12	12	12	12	12
	H MAX (in)	72	72	55	72	72	72
28 ft WIDES	H MIN (in)	12	12	12	12	12	12
	H MAX (in)	72	72	65	72	72	72
32 ft WIDES	H MIN (in)	-	-	12	-	-	12
	H MAX (in)	-	-	72	-	-	72

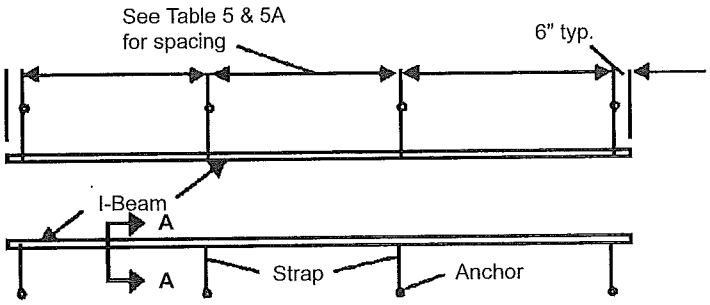

ANCHOR TIE DOWN DETAIL FIG. 5-14

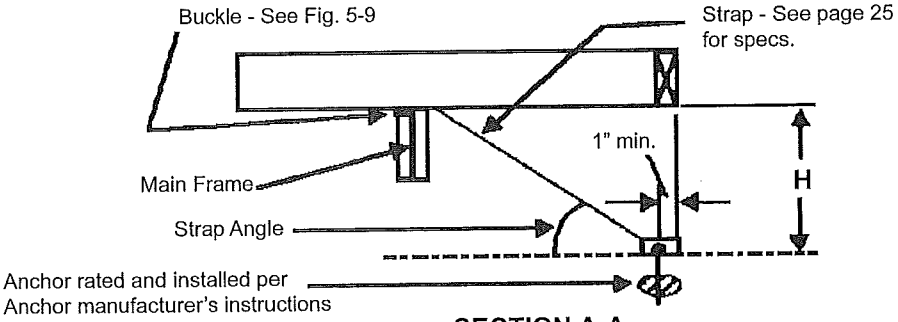

SECTION A-A

TIE-DOWN DETAILS FOR EXTRA TALL PIERS (UP TO 88")
WIND ZONE I ONLY

TABLE 5B

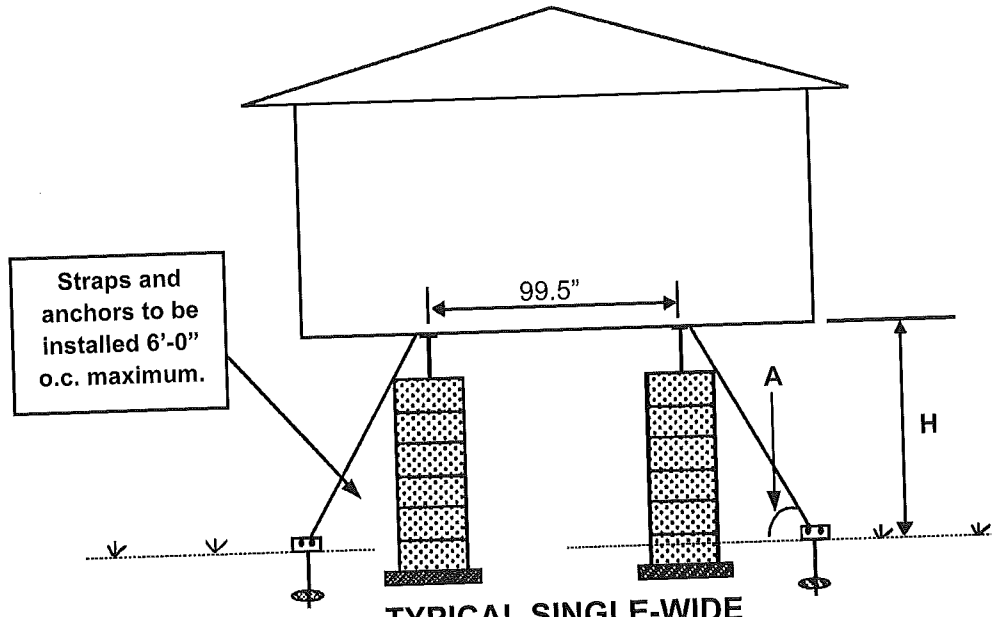

JEFFREY T. LEGAULT
REGISTERED
No. 19600312
3.5.03
STATE OF INDIANA
PROFESSIONAL ENGINEER

TYPICAL SINGLE-WIDE

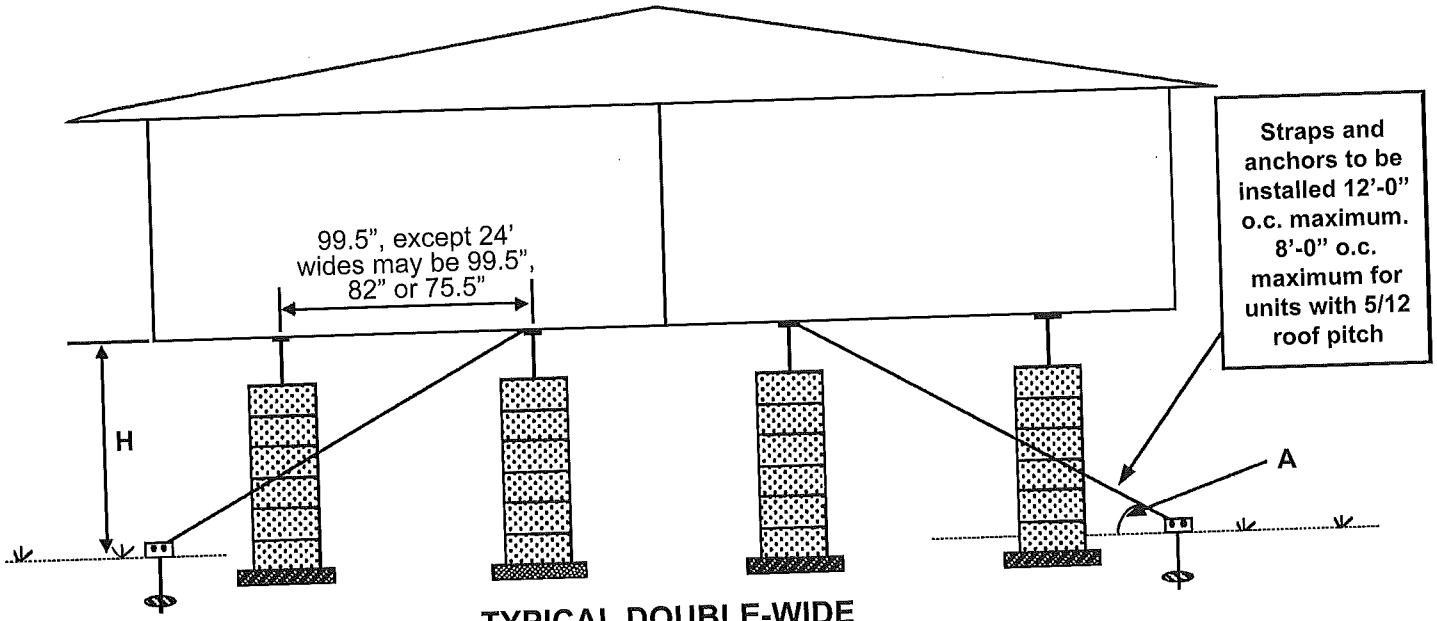

TYPICAL DOUBLE-WIDE

		NOMINAL UNIT WIDTH						
		Singlewides		Doublewides			Doublewides with 5/12 Roof Pitch	
		14'	16'	24'	28'	32'	28'	32'
Strap Angle, A (degrees)	Min.	8	8	9.1	12.1	15.7	13.7	7.5
	Max.	69.9	63.9	39.9	34.6	32.2	34.6	32.2
Pier Height, H (degrees)	Min.	12	12	18	28	40	29	19
	Max.	88	88	88	88	88	88	88

Notes:
1) Straps and anchors to be rated for 3150 lbs. of working stress min.
2) See page 25 for strap material specification, connection to I-Beam and all other setup information.
3) See page 12 for required pier construction.

STANDARD TIE-DOWN DETAILS

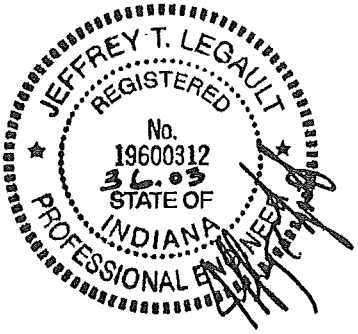

TABLE 6

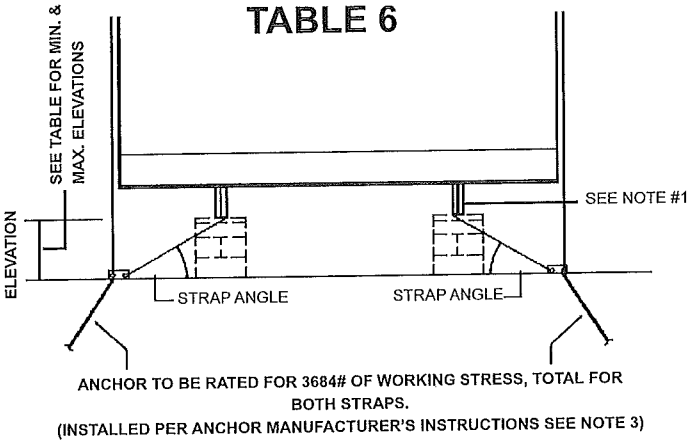

INSTALL STRAP & ANCHORS
6'-8' @ ZONE II
5'-4" @ ZONE III
&
4'-0" @ ZONE II & III
FOR SHED ROOF
SINGLEWIDES
SEE TABLE FOR ELEVATION & STRAP ANGLE LIMITATIONS

ANCHOR TO BE RATED FOR 3684# OF WORKING STRESS, TOTAL FOR BOTH STRAPS.
(INSTALLED PER ANCHOR MANUFACTURER'S INSTRUCTIONS SEE NOTE 3)

SINGLE-WIDE

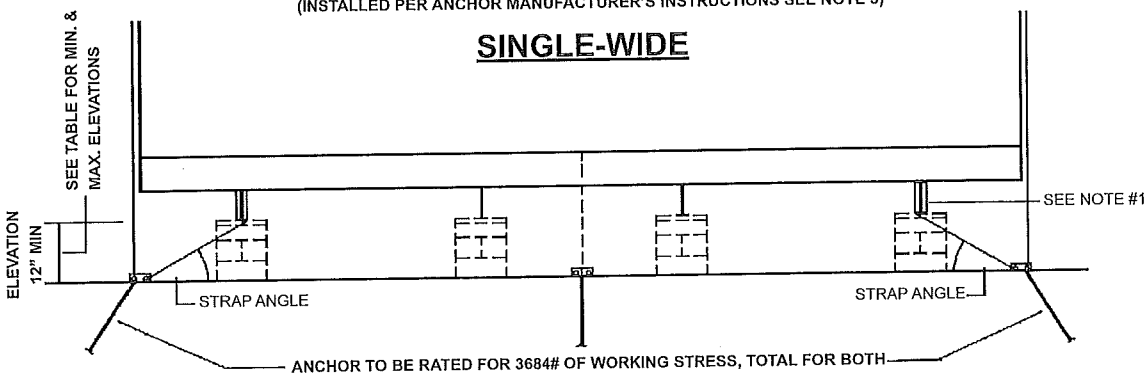

ANCHOR TO BE RATED FOR 3684# OF WORKING STRESS, TOTAL FOR BOTH STRAPS.
(INSTALLED PER ANCHOR MANUFACTURER'S INSTRUCTIONS SEE NOTE 3)

DOUBLE-WIDE

* USE 24' WIDE RESULTS FOR 12' HALF OF 22' WIDE DOUBLE WIDES

WIDTH	WIND ZONE II		WIND ZONE III	
	MIN. & MAX. ELEVATION	MIN. & MAX. DIAGONAL STRAP ANGLE	MIN. & MAX. ELEVATION	MIN. & MAX. DIAGONAL STRAP ANGLE
12'	14" TO 25"	25° TO 40°	14" TO 26"	25° TO 41°
14'	12" TO 27"	20.5° TO 40°	12" TO 28"	20.5° TO 41°
12' SHED ROOF	25.2" TO 34.6"	41° TO 50°	25.2" TO 34.6"	41° TO 50°
14' SHED ROOF	23.4" TO 38.4"	36° TO 50°	23.4" TO 38.4"	36° TO 50°
16'	16" TO 36"	20.5° TO 40°	15.5" TO 38"	19.5° TO 41°
18'	20" TO 44"	20.5° TO 40°	19" TO 47"	19.5° TO 41°
20' OR 22' *	12" TO 15"	34° TO 40°	12" TO 16"	34° TO 42°
24'	12" TO 22"	24.5° TO 40°	12" TO 23.5"	24.5° TO 42°
28'	12" TO 23.5"	23° TO 40°	12" TO 25.5"	23° TO 42°
32'	12" TO 33"	16.6° TO 39.3°	12" TO 36"	16.6° TO 41.8°
16' SHED ROOF	21" TO 27.5"	25.9° TO 32.4°	21" TO 27.5"	25.9° TO 32.4°

NOTES:

1) FOR STRAP MATERIAL SPECIFICATION, CONNECTION TO FRAME I-BEAM & OTHER SETUP INFORMATION, REFER TO SKYLINE INSTALLATION MANUAL
2) FOR ANCHORING SYSTEMS, THE INSTRUCTIONS SHALL INDICATE: A) THE MINIMUM ANCHOR CAPACITY REQUIRED; B) ANCHORS SHOULD BE CERTIFIED BY PROFESSIONAL ENGINEER, ARCHITECT, OR A NATIONALLY RECOGNIZED TESTING LABORATORY AS TO THEIR RESISTANCE, BASED ON THE MAXIMUM ANGLE OF DIAGONAL TIE AND/OR VERTICAL TIE LOADING AND ANGLE OF ANCHOR INSTALLATION, AND TYPE OF SOIL IN WHICH THE ANCHOR IS TO BE INSTALLED; C) GROUND ANCHORS SHOULD BE EMBEDDED BELOW THE FROST LINE AND BE AT LEAST 2 INCHES ABOVE THE WATER TABLE; D) GROUND ANCHORS SHOULD BE INSTALLED TO THEIR FULL DEPTH, AND STABILIZER PLATES SHOULD BE INSTALLED TO PROVIDE ADDED RESISTANCE TO OVERTURNING OR SLIDING FORCES; E) ANCHORING EQUIPMENT SHOULD BE CERTIFIED BY A PROFESSIONAL ENGINEER OR ARCHITECT TO RESIST THESE SPECIFIED FORCES IN ACCORDANCE WITH TESTING PROCEDURES IN ASTM STANDARD SPECIFICATION FOR STRAPPING, FLAT STEEL AND SEALS.
3) ANCHORS RATED @ 3150# OF WORKING STRESS TOTAL FOR BOTH STRAPS, MAY BE USED IF STRAP & ANCHOR SPACING IS REDUCED TO 5'-8" @ WIND ZONE II AND 4'-6" @ WIND ZONE III. STRAPS AND ANCHORS MAY BE INSTALLED 4'-0" O.C. ON SHED ROOF SINGLEWIDES WITH ANCHORS RATED @ 3150#.
4) THE A-B CHANCE STRAP SEAL DEVICE DEPICTED BY FIG. 5-12 MAY BE USED AS DIRECTED FOR ATTACHING THE REQUIRED DOUBLEWIDE CENTERLINE STRAPS TO GROUND ANCHORS.
5) STANDARD TIE-DOWN DETAILS ARE NOT APPLICABLE TO 5/12 ROOF PITCH DOUBLEWIDES @ WIND ZONE II & III.

TIE-DOWN DETAILS FOR 5/12 ROOF PITCH DOUBLE WIDES AT WIND ZONE II & III

TABLE 6A

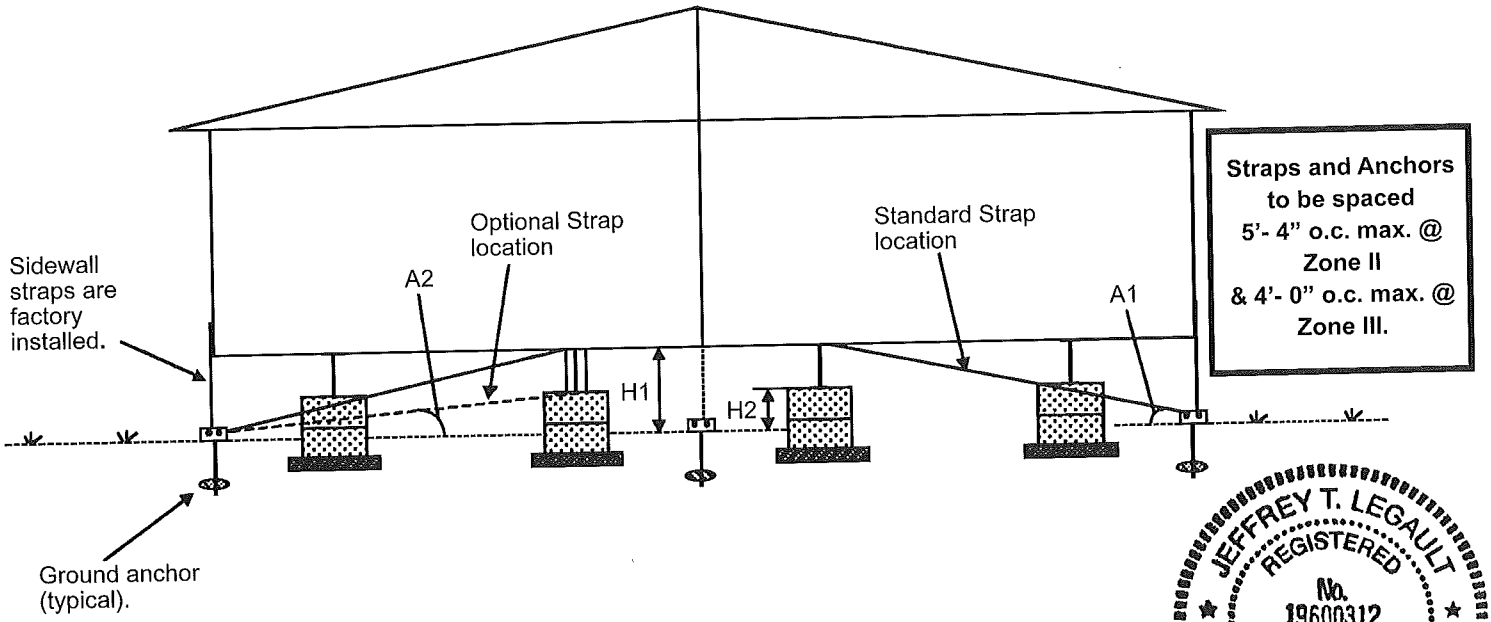

WIND ZONE II (100 mph)				
Unit Width	H (max.)	H (min.)	Angle (max.)	Angle (min.)
24'	48"	12"	23.2 degrees	6.12 degrees
26'	48"	12"	20.3 degrees	6.12 degrees
28'	48"	12"	20.3 degrees	5.28 degrees
32'	48"	12"	18.96 degrees	4.91 degrees

WIND ZONE III (110 mph)				
Unit Width	H (max.)	H (min.)	Angle (max.)	Angle (min.)
24'	48"	12"	25.2 degrees	6.12 degrees
26'	48"	12"	20.3 degrees	6.12 degrees
28'	48"	12"	20.3 degrees	5.28 degrees
32'	48"	12"	18.96 degrees	4.91 degrees

NOTES:
1) Straps and anchors to be rated for 3150 lbs. of working stress (min.).
2) Use H1 and A1 for standard strap location. Use H2 and A2 for optional strap location.
3) See page 25 for strap material specification, connection to I-Beam and other setup information.
4) The A-B chance strap seal device depicted by Fig. 5-12 may be used as directed for attaching the required doublewide centerline straps to ground anchors.

TIE-DOWN DETAILS FOR UNITS WITH 102" SIDEWALLS

TABLE 6B

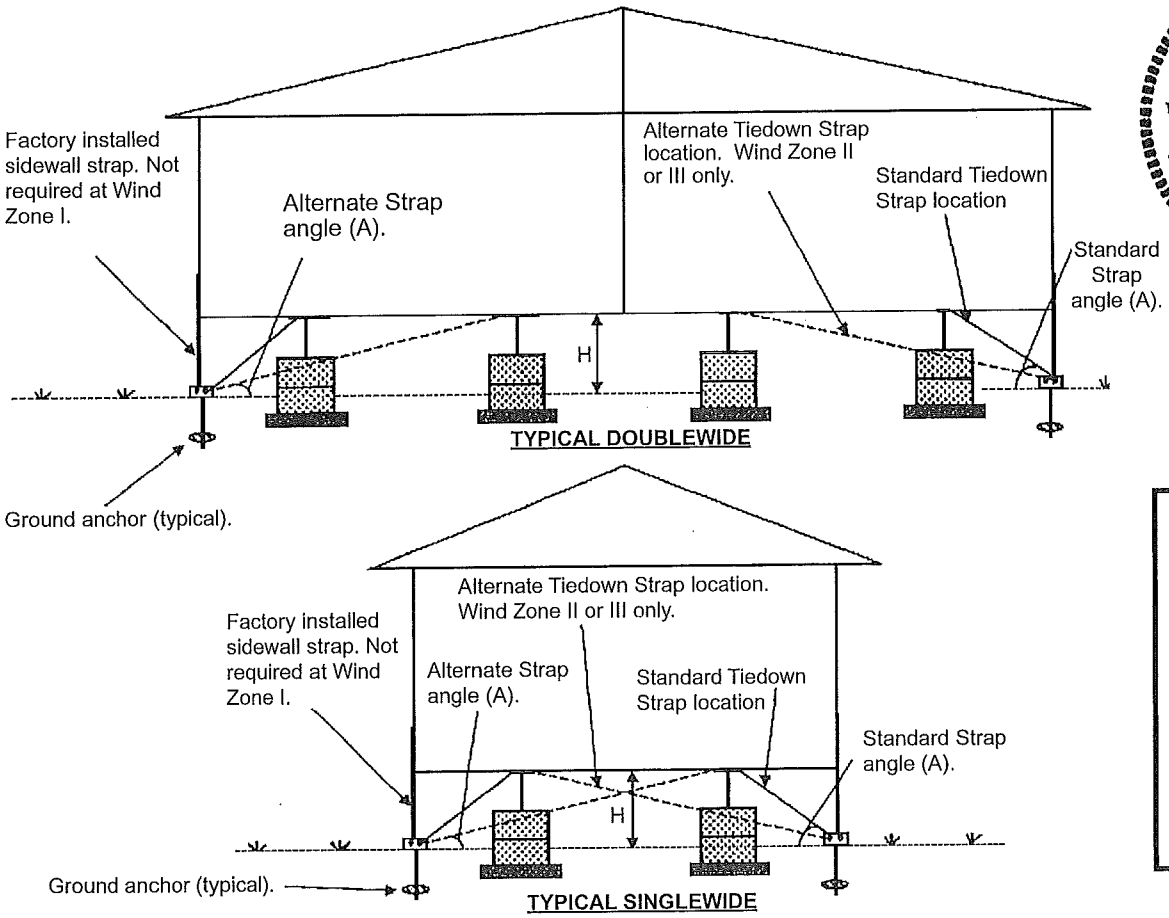

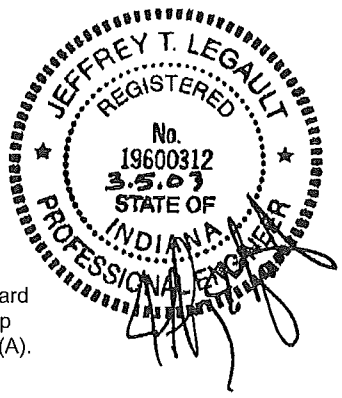

Straps and Anchors to be spaced 12'-0" o.c. max. at Wind Zone I. 8'-0" o.c. max. on 5/12 roof pitch units @ Wind Zone I. 5'-4" o.c. max. at Wind Zone II. 4'-0" o.c. max. at Wind Zone III.

STANDARD TIE-DOWN STRAP LOCATIONS

		14' Singlewides	16' Singlewides	28' Doublewides	32' Doublewides	28' Doublewides with 5/12 roof pitch	32' Doublewides with 5/12 roof pitch
Wind Zone I	H (Max.)	32"	44.5"	36"	49.5"	23.5"	27.5"
	H (Min.)	12"	14"	12"	12"	12"	12"
	A (Max.)	45.0 degrees	46.0 degrees	50.0 degrees	51.0 degrees	38 degrees	34.5 degrees
	A (Max.)	19.0 degrees	18.0 degrees	7.0 degrees	10.0 degrees	9 degrees	6 degrees
Wind Zone II	H (Max.)	28"	37"	25"	35"	-	-
	H (Min.)	13"	17.5"	12"	12"	-	-
	A (Max.)	41.0 degrees	40.5 degrees	41.5 degrees	41.0 degrees	-	-
	A (Max.)	22.0 degrees	22.0 degrees	23.0 degrees	16.6 degrees	-	-
Wind Zone III	H (Max.)	33"	44"	29"	41"	-	-
	H (Min.)	12"	15.5"	12"	12"	-	-
	A (Max.)	45.7 degrees	45.5 degrees	45.8 degrees	45.5 degrees	-	-
	A (Max.)	20.4 degrees	19.7 degrees	23.0 degrees	16.6 degrees	-	-

ALTERNATE TIE-DOWN STRAP LOCATIONS

		14' Singlewides	16' Singlewides	28' Doublewides	32' Doublewides	28' Doublewides with 5/12 roof pitch	32' Doublewides with 5/12 roof pitch
Wind Zone II	H (Max.)	48"	48"	48"	48"	-	-
	H (Min.)	12"	12"	12"	12"	-	-
	A (Max.)	20.0 degrees	18.6 degrees	20.6 degrees	19.0 degrees	-	-
	A (Max.)	5.2 degrees	4.8 degrees	5.4 degrees	4.9 degrees	-	-
Wind Zone III	H (Max.)	48"	48"	48"	48"	-	-
	H (Min.)	12"	12"	12"	12"	-	-
	A (Max.)	20.0 degrees	18.6 degrees	20.6 degrees	19.0 degrees	-	-
	A (Max.)	5.2 degrees	4.8 degrees	5.4 degrees	4.9 degrees	-	-

NOTES:
1) Straps and anchors to be rated for 3150 lbs. of working stress (min.).
2) See page 25 for strap material specification, connection to I-Beam and other setup information.
3) Main I-Beam spacing to be 99.5" min. on all units.
4) Not available on 5/12 roof pitch units at Wind Zone II or III.

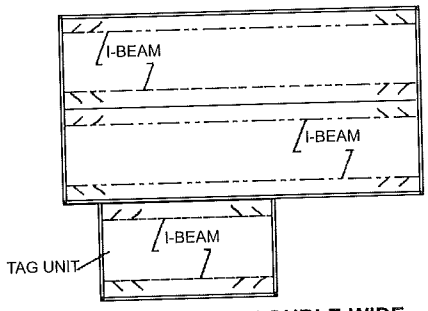

TYPICAL DOUBLE-WIDE

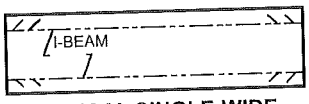

TYPICAL SINGLE-WIDE

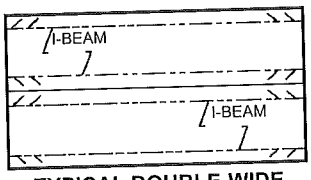

TYPICAL DOUBLE-WIDE

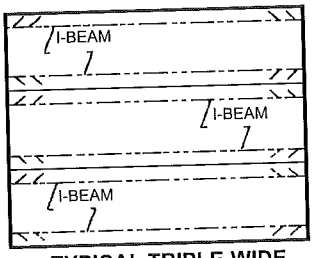

TYPICAL TRIPLE-WIDE

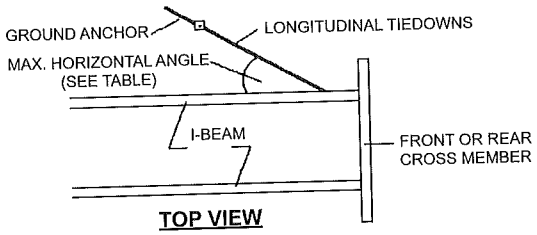

TOP VIEW

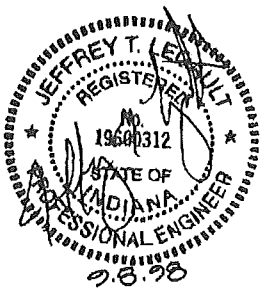

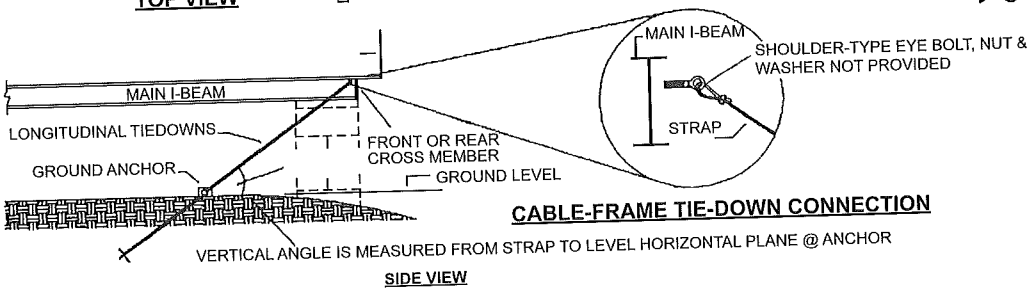

CABLE-FRAME TIE-DOWN CONNECTION

SIDE VIEW

2 TIE-DOWN STRAPS @ FRONT & REAR OF EACH FLOOR. WIND ZONE II

	NOMINAL UNIT WIDTH (feet)													
	SINGLEWIDES				DOUBLEWIDES				DOUBLEWIDES w/5/12 ROOF PITCH				TRIPLEWIDES	TAG UNITS
ANGLES (DEGREES)	12'	14'	16'	18'	24'	26'	28'	32'	24'	26'	28'	32'		
MAX. VERTICAL ANGLE	46	35	18	NA	42	37	32	13	35	28	19	NA	23	42
MAX. HORIZONTAL ANGLE	20	20	20	NA	20	20	20	20	20	20	20	NA	20	20

2 TIE-DOWN STRAPS @ FRONT & REAR OF EACH FLOOR. WIND ZONE III

	NOMINAL UNIT WIDTH (feet)													
	SINGLEWIDES				DOUBLEWIDES				DOUBLEWIDES w/5/12 ROOF PITCH				TRIPLEWIDES	TAG UNITS
ANGLES (DEGREES)	12'	14'	16'	18'	24'	26'	28'	32'	24'	26'	28'	32'		
MAX. VERTICAL ANGLE	32	NA	NA	NA	27	17	NA	NA	11	NA	NA	NA	NA	27
MAX. HORIZONTAL ANGLE	20	20	NA	NA	20	20	20	NA	20	NA	NA	NA	NA	45

4 TIE-DOWN STRAPS @ FRONT & REAR OF EACH FLOOR. WIND ZONE II

	NOMINAL UNIT WIDTH (feet)													
	SINGLEWIDES				DOUBLE-				DOUBLEWIDES w/5/12 ROOF PITCH				TRIPLEWIDES	TAG UNITS
ANGLES (DEGREES)	12'	14'	16'	18'	24'	26'	28'	32'	24'	26'	28'	32'		
MAX. VERTICAL ANGLE	62	57	51	45	61	58	56	50	57	54	51	43	52	NA
MAX. HORIZONTAL ANGLE	45	45	45	45	45	45	45	45	45	45	45	45	45	NA

4 TIE-DOWN STRAPS @ FRONT & REAR OF EACH FLOOR. WIND ZONE III

	NOMINAL UNIT WIDTH (feet)													
	SINGLEWIDES				DOUBLEWIDES				DOUBLEWIDES w/5/12 ROOF PITCH				TRIPLEWIDES	TAG UNITS
ANGLES (DEGREES)	12'	14'	16'	18'	24'	26'	28'	32'	24'	26'	28'	32'		
MAX. VERTICAL ANGLE	56	49	41	31	54	51	47	39	49	45	41	28	42	NA
MAX. HORIZONTAL ANGLE	45	45	45	45	45	45	45	45	45	45	45	45	45	NA

NOTES:

1) Longitudinal Tiedowns are in addition to diagonal tiedowns along the main rails.
2) Ground anchors, straps & cables (including eyebolt, nut, etc.) shall be capable of resisting an ultimate load of 4725 lbs. (3150 lbs. design) min. Install ground anchor in accordance with ground anchor manufacturer's installation instructions. See note 2 page 29.
3) Anchorage system subject to local inspection at the time of installation.
4) Other methods approved by local building authorities may be used.
5) Longitudinal tiedowns are not required at wind zone I.
6) If a doublewide unit has a roof pitch exceeding 3/12 (i.e. 4/12) then use 5/12 roof pitch requirements.

TIE-DOWN STRAP INSTALLATION EXAMPLE

To properly install ground anchors and tie-down straps for a home, certain criteria must be established. This criteria is as follows:

1. Width of the home.
2. Main I-beam spacing of the home.
3. Wind Zone area where home is to be placed.
4. Distance from bottom of I-beam to ground.
5. Torque reading of the soil.
6. Nominal roof pitch of unit (for double-wides).

For this example assume the home being installed is a 14 foot wide (single-wide) by 66 feet long. The home is being installed in Wind Zone I, and the main I-beam spacing has been established at 99-1/2 inches. The home has a 12 inch tall I-beam, and the clearance from the I-beam to the ground is measured at 20 inches. To determine the distance (H) from the ground to the underside of the floor add the I-beam depth (12") to the clearance between I-beam and the ground (20"). Therefore H=12"+20"=32".

From Table 5 on page 27 (Wind Zone I) determine the maximum allowable strap spacing. Enter table at left hand side for 14' wides, and check the maximum pier height (H) for 99.5" I-beam spacing. H max.=35" with straps/anchors spaced at 12' o.c. maximum. Therefore, tie-down strap spacing should not exceed 12 foot on center. If the home were placed in a Wind Zone II or III area, the tables on pages 30 or 31 would be used.

Next, determine the correct soil anchors to be used. An anchor soil test probe is required to test the soil where the example home is to be set. The soil test probe looks like a long drill bit with a fitting at the top which accepts a torque wrench. The torque required to turn the probe, when the probe reaches the desired anchor depth, is measured. The anchor manufacturer provides a chart relating the measured torque value to the type of anchor required to provide the desired holding force.

AN INCORRECTLY SELECTED ANCHOR WILL NOT PROVIDE THE REQUIRED LOAD RESISTANCE.

For this example, assume a torque of 300 inch-pounds was measured at a probe depth of 4 feet. A class 4 soil is indicated from the anchor manufacturer data. The correct anchor would be identified and rated for a class 4 soil.

Soil anchors must be installed as directed by the anchor manufacturer. If the direction of the pull is not in line with the shaft of the anchor, a concrete cylinder collar or a ground anchor stabilizer plate is required. The anchor manufacturer installation instructions should describe the correct anchor placement with regard to direction, water table level and frost line location.

DOUBLE-WIDE EXTERIOR CLOSURE

HARDBOARD SIDING

Fasten the precut strip of Masonite with 8d galvanized nails (head should be painted to match the siding) 4" o.c. around the perimeter and 8" o.c. on the intermediate studs. Apply trim and caulking at the centerline, horizontal joints and around windows (if required) as illustrated by the details in Figure 5-18. (In cases where the Masonite has to be cut to fit in the field, the ripped edges should be stained to match the siding with acrylic latex stain).

Note: Use 8d galvanized box nails w/min. 3/16" dia. heads at 4" o.c. around perimeter and 8' o.c. at intermediate studs.

Figure A

Vertical Masonite Application

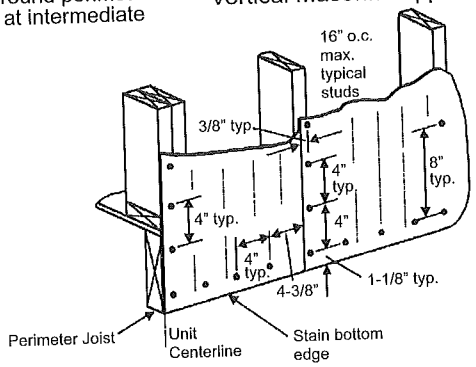

Figure B

Double Wide Masonite Close-Off Application

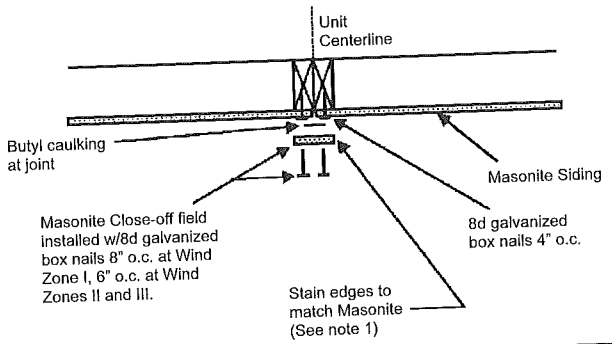

Figure C

Vertical Joint

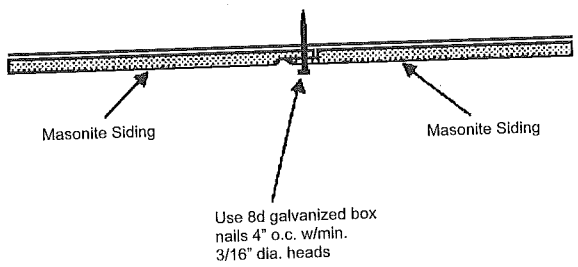

Figure D

Horizontal Joint

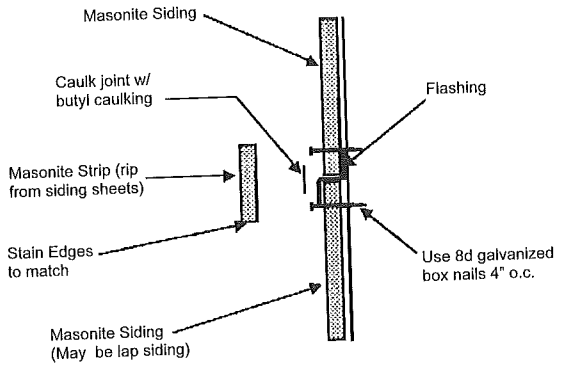

Figure E

Typical Window Trim Application

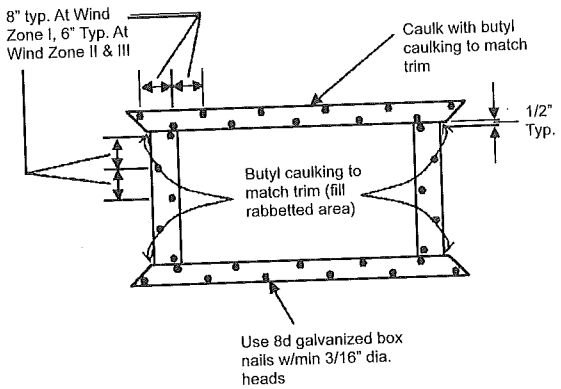

NOTE:

1. All ripped edges to be stained with matching acrylic latex stain from siding mfr.

FIG. 5-18

DOUBLE-WIDE EXTERIOR CLOSURE

INYL LAP SIDING

The siding panels should be attached using galvanized steel r aluminum 16 ga. 1/2 by 1-1/2" staples. (6d galvanized nails ıay also be used). Staples should be driven so that there is a /32" clearance between the siding and staple crown to allow ome lateral movement. Fasten every 16" at the stud location. ee Figure 5-19 Detail A for proper fastening.

Snap the bottom course of siding into the starter strip and ısten to the wall. Leave a 1/4" space at corner posts and l' channels around window and door openings to allow for xpansion. Do not fasten within 4" of an accessory. Verti- al butt joints in panels should overlap 1". Do not fasten the anel within 4" of the joint. Install vinyl, aluminum, felt or other uitable material for flashing at bottom corners of doors and /indows per Figure 5-19 Detail E. Apply caulk around siding nd light blocks, water faucets, or other small penetrations.

Install successive courses similarly to the first. Butt joints in djacent courses should be offset approximately 24" for best ppearance. Joints in alternate courses should be aligned ertically (See Figure 5-19 Detail B).

Panels will have to be cut at headers and sills. A single anel should extend without joints across the width of the pening. When cutting a panel at a sill, measure the distance etween the bottom of the opening and the top lock of the ower course, then deduct 1/4" (See Fig. 5-19 Detail C).

Slide the cut panel into the under sill trim and install. Note ıat the under sill trim piece may have to be furred to maintain ıe proper pitch of the siding.

Measure and cut the header panel in the same manner as ıdicated above.

The top sections at the gable will need to be angle cut. Use wo scrap pieces of siding to make a pattern (See Fig. 5-19)etail D). Interlock one piece with the siding panel below. Hold the other piece on top against the gable. Mark a line on ıe bottom piece and cut. Use this piece as a pattern for utting gable pieces. Install the gable pieces by interlocking vith the lower course, sliding into the gable 'J' rail and astening.

If a home has been provided with "Craneboard" solid core inyl siding, then read and follow the special instructions rovided with this manual.

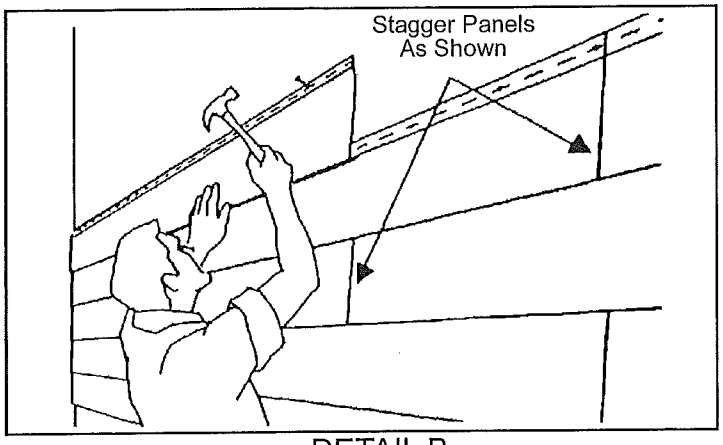

DETAIL B

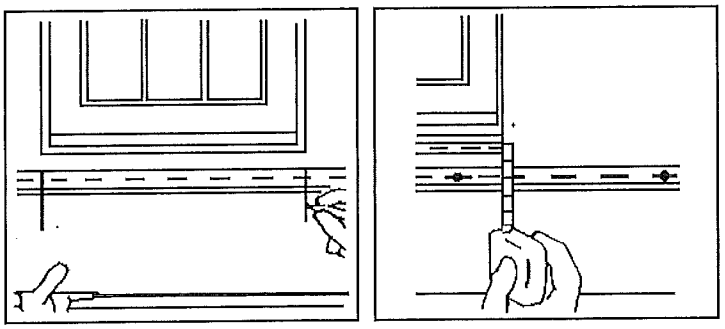

DETAIL C

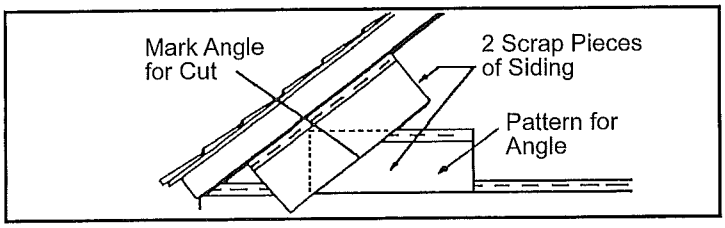

DETAIL D

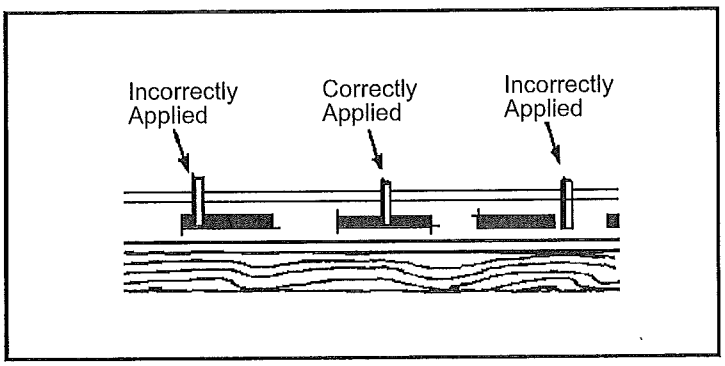

DETAIL A

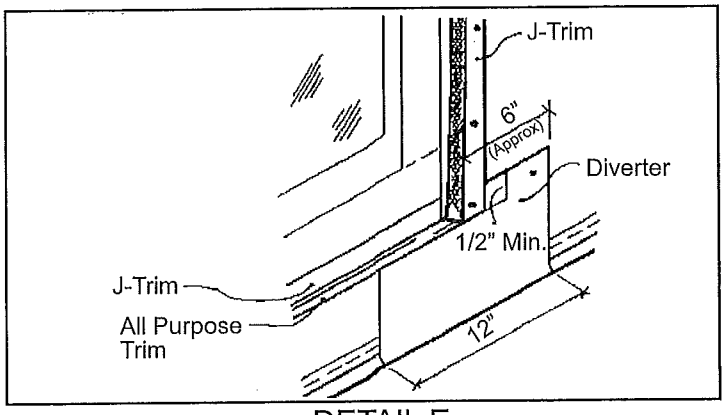

DETAIL E

FIG. 5-19

DOUBLE-WIDE EXTERIOR CLOSURE

JAMES HARDIE "HARDIPLANK" OR "HARDIPANEL" SIDING

"Hardiplank" and "Hardipanel" are fiber-cement siding panels. "Hardiplank" is a lap style siding, and "Hardipanel" is a panel type siding. Fasten the siding panels to framing members with 6d galvanized nails (2" long min. -2-1/4" with "Hardiplank" at Wind Zones II and III) per the details shown in Figure 5-20 below. "Hardiplank" siding requires 2 additional fasteners evenly spaced between studs into sheathing at Wind Zone II and III only. "Hardiplank" siding is not allowed within 3 feet of a sidewall/endwall corner at Wind Zone III.

Finish siding by painting with an exterior grade, semi-gloss acrylic or latex paint. All ripped edges of panels should be painted to match.

Figure A

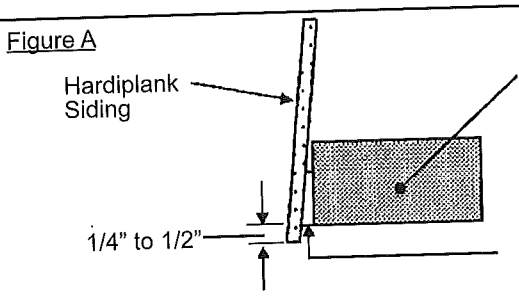

Starter Detail

Figure B

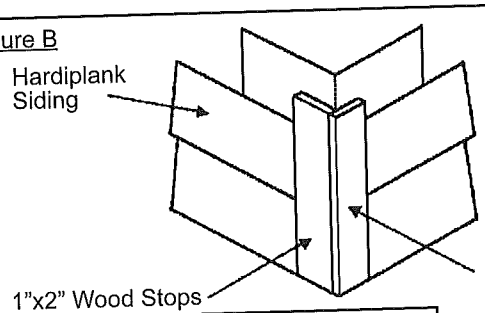

Outside Corner

Figure C

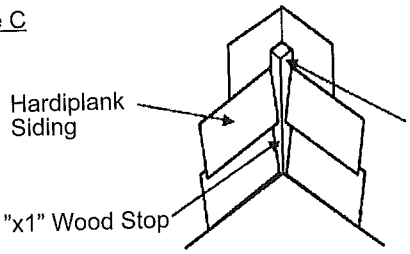

Inside Corner

Figure D

Lap joints must fall at stud. Stagger joints at least 2 stud bays. 48" min. between joints at same course. 2 Stud bays required from wall corner to 1st joint.

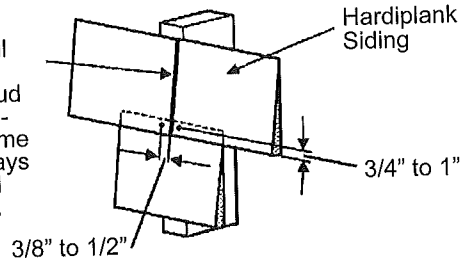

Lap Joint

Figure E

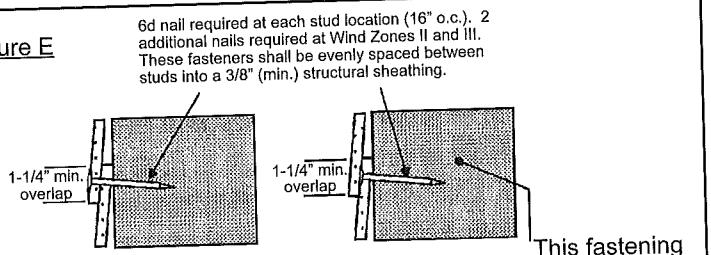

HardiPlank Nailing

Figure F

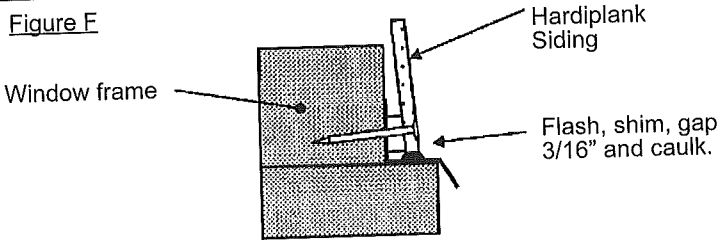

Window Detail

Figure G

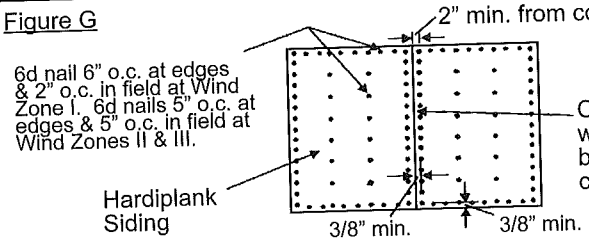

HardiPanel Application

NOTE:
Double studs are required within 3 feet of a sidewall/endwall corner at Wind Zones II and III. Fasten HardiPanel siding panels to both studs at double stud locations.

FIG. 5-20

SHINGLE ROOF CLOSURE

INSTALLATION OF SHINGLED ROOF:

. Fold back underlayment paper.
. Remove the 16 inch wide sheathing at the ridge beam of one or both halves which was temporarily secured to the roof at the factory.
. Bolt the ridge beam together as outlined on page 23. For models with heat ducts in the roof cavity make the interconnection of two units by running the provided flexible duct through the access hole in the ridge beam. After the mechanical connection is made, tape the joint with 2 inch wide duct tape.
. See Fig 5-21. Reinstall the 3/8" x 16" wide sheathing by first reinstalling the factory provided sheathing panel clips (2 per bay), then fasten using 15 gauge x 7/16" x 1-1/2" staples or 8d twist nails 4 inches on center at butt joints and at each truss between joints. Special fastening may be required at trusses located over shearwalls. These trusses will be marked with a paint spot on the truss top chord. Fasten roof sheathing to these trusses with fasteners spaced 2" o.c. (3" o.c. — if truss is doubled — to both trusses).
5. If home is to be set in a Wind Zone II or III area, then apply a 6" wide strip of asphalt cement to the roof decking on both halves of home, directly adjacent to the roof peak.
6. Tack roof underlayment paper back in place.
7. Staple additional underlayment strip down, centered at ridge.
8. Fasten drip cap to sheathing at roof edge (above felt).
9. Complete installation of shingles (See Fig. 5-22).
10. Cut shingles for ridge cap and install as shown in Figures 5-24 and 5-25.

NOTE: TO PREVENT WIND LIFTING AND POSSIBLE LEAKAGE, THE RIDGE CAP SHINGLES SHOULD BE ORIENTED WITH RESPECT TO PREVAILING WINDS AS INDICATED IN FIG. 5-25.

11. Install closure cap at eave joint (See Fig. 5-26).
12. See supplement for ridge vent if applicable.

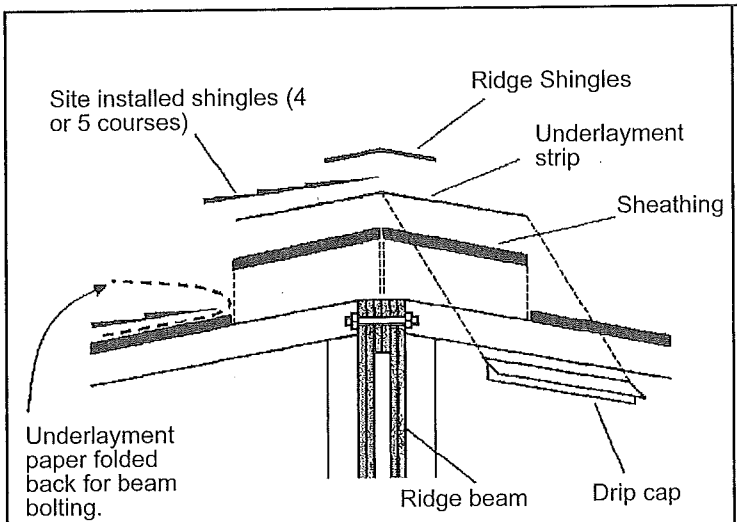

FIG. 5-21

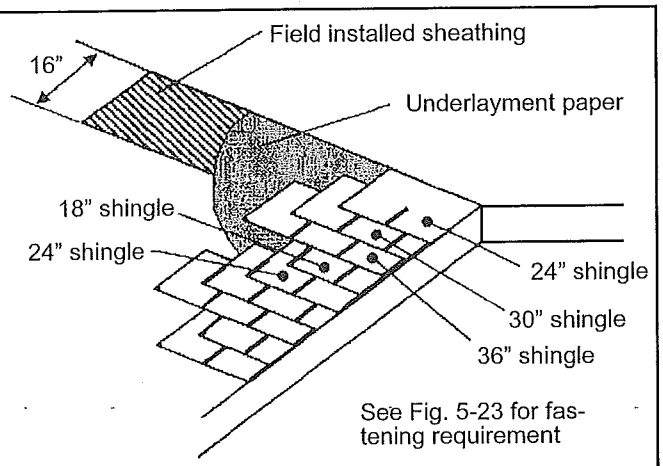

If the roofing in the area of the front rake has been covered to protect from wind damage during transit, the protective covering and fasteners are to be carefully removed. Seal the fastener holes with asphalt roofing cement.

FIG. 5-22

OPTIONAL CENTERLINE METAL FLASHING AND SHINGLE INSTALLATION.

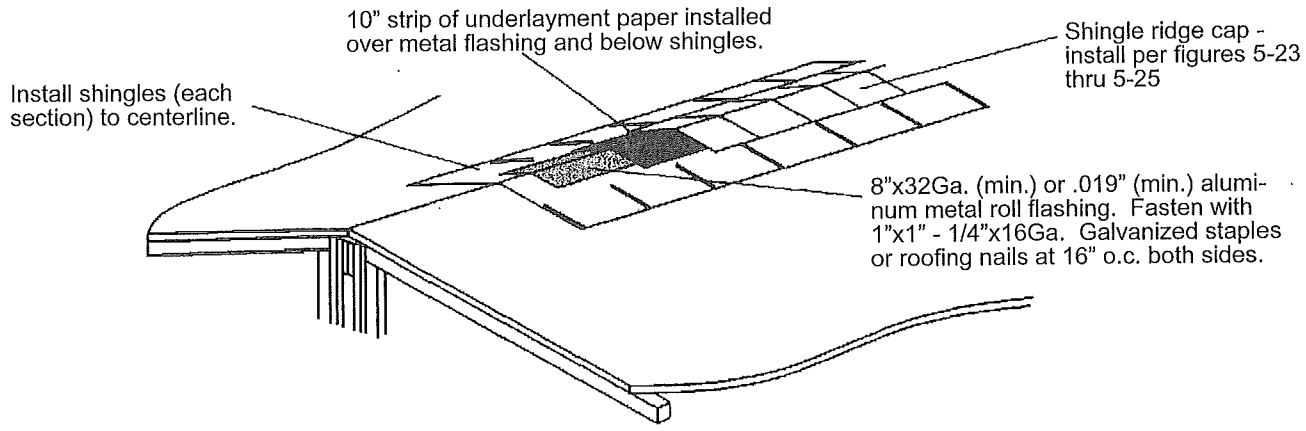

FIG. 5-22A

DOUBLE-WIDE SHINGLED ROOF

FASTENERS:

Use 1" crown x 1" leg 16 GA. galvanized staples or 1 1/4" 12 GA. galvanized roofing nails with 3/8" diameter heads

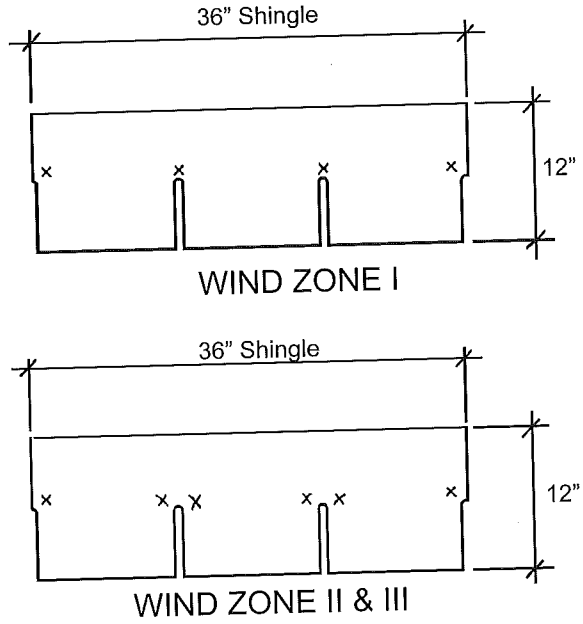

Nail 1" from each end 5 5/8" above exposed butt & 5/8" above each cut out

FIG. 5-23

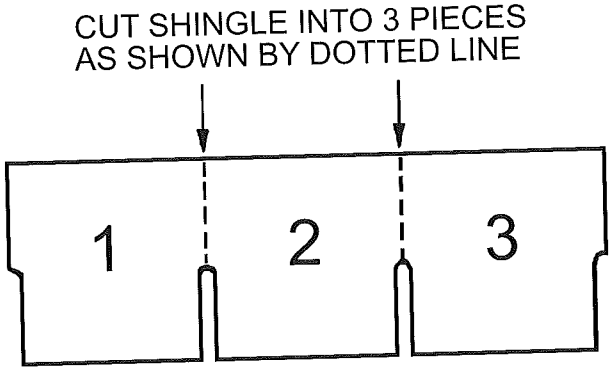

FIG. 5-24

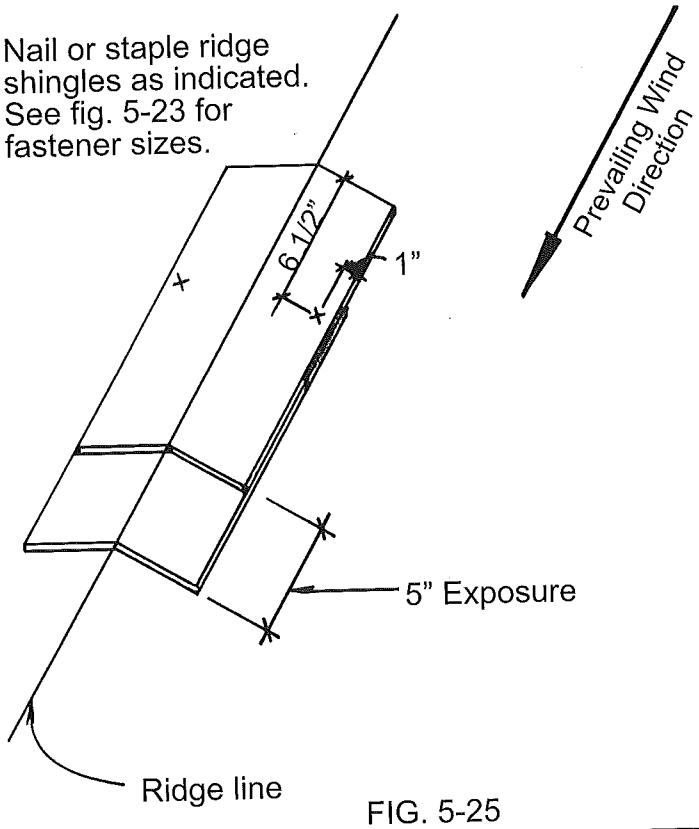

FIG. 5-25

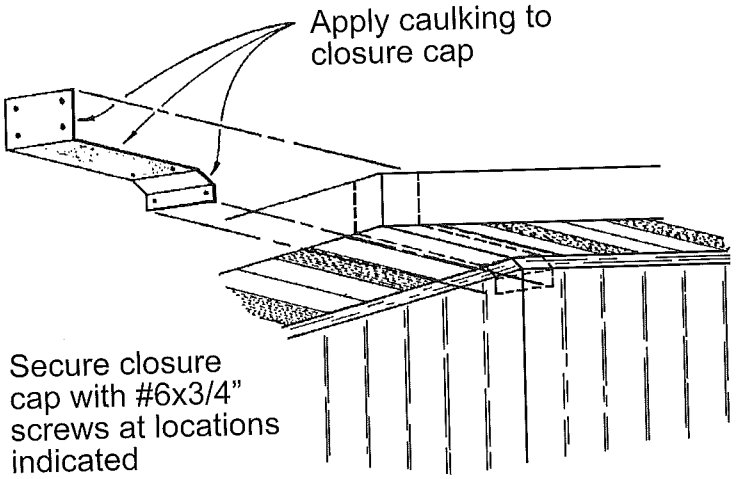

FIG. 5-26

DOUBLE-WIDE UTILITY INTERCONNECTION

ELECTRICAL INTERCONNECTION OF DOUBLE-WIDES

Bonding

Chassis halves floor joist construction are to be bonded together with the provided bonding wire and lugs (See page 54).

Electrical Crossover

NOTE: ALL ON-SITE ELECTRICAL WORK MUST BE PERFORMED BY QUALIFIED PERSONNEL. BEFORE CONNECTING ELECTRICAL CROSSOVER ASSURE THAT POWER HAS NOT YET BEEN CONNECTED.

Endwall Crossover

The procedure for this interconnection is as follows:

1. Feed wires from side B through metallic wire protectors into junction box or Sub-Panel in side A (See Fig. 5-27).
2. Staple wires within 8 inches of junction box or Sub-Panel to side of stud at centerline of stud.
3. Remove cover from junction box inside home; cut wires to length allowing a minimum of 4 inches of free wire extending from box.
4. Strip approximately 1 inch of wire and connect like circuit numbers (white to white, black to black, ground to ground, red to red on multi-circuits and 240V circuits) with the provided wire nuts.
5. Push wires into box and replace cover.

NOTE: SOME MODELS MAY HAVE ELECTRICAL CROSSOVERS AT FRONT AND REAR.

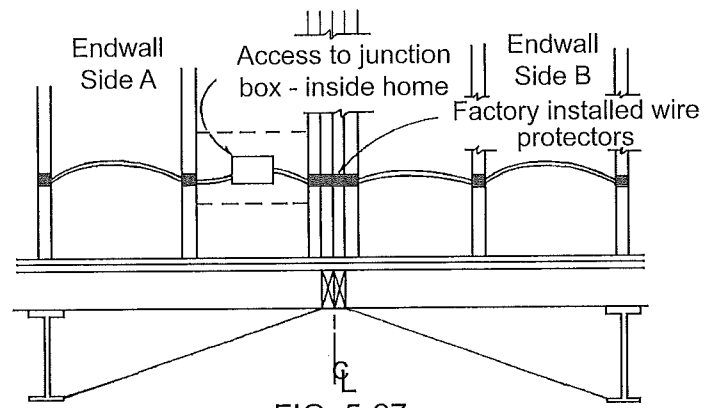

FIG. 5-27

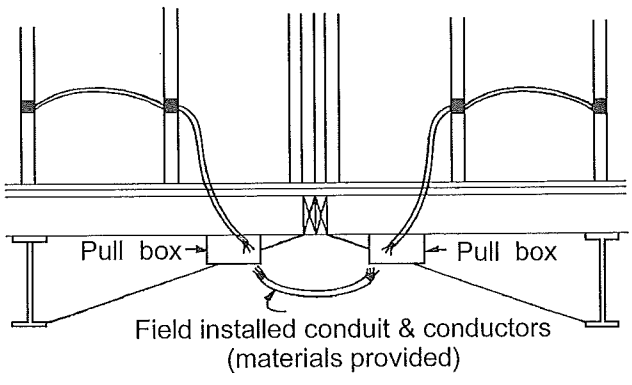

FIG. 5-28

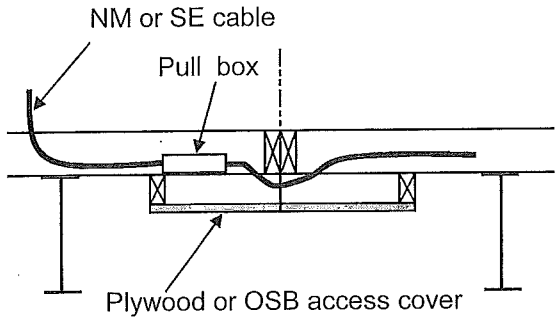

FIG. 5-28A

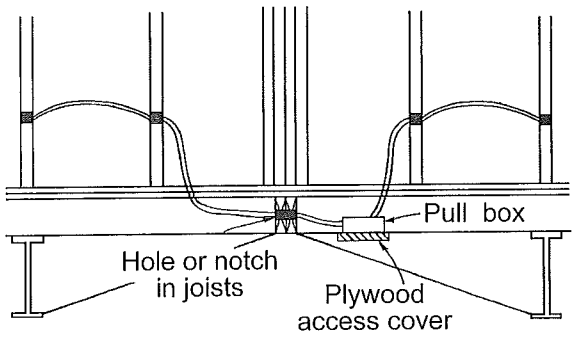

FIG. 5-28B

Below Floor Crossover

The correct procedure is as follows:

1. Remove the pull box covers and install the provided conduit and conductors between the boxes (See Fig. 5-28).
2. Using the provided wire connectors, connect like circuit numbers (white to white, black to black, ground to ground, red to red on multi-circuits and 240V circuits).
3. Push wires into boxes and replace covers.

Below Floor Crossovers
In Floor Pull Box

The correct procedure is as follows:

1. Remove plywood access covers and cut bottom board for access to wires (See Fig. 5-28A).
2. Feed wires around bottom of marriage line floor joists and into junction box.
3. Cut wires to length allowing a minimum of 4" free wire extending into box.
4. Strip approximately 1 inch of wire and connect like circuit numbers (white to white, black to black, ground to ground, red to red on multi-circuits and 240V circuits).
5. Replace access covers and tape bottom board with provided tape.

In Floor Pull Box

The correct procedure is as follows:

1. Remove plywood access cover to pull box and cut bottom board on opposite half for access to wires (See Fig. 5-28B).
2. Feed wires through hole or notch in joists into junction box.
3. Attach wires as described in steps 3 and 4 for endwall crossover.
4. Replace access cover and tape bottom board with provided tape.

UTILITY INTERCONNECTION

In Floor Cable Splice

The correct procedure is as follows:

1. Remove bottom board access covers (See Fig. 5-28C).
2. Feed cable through hole or notch in joists.
3. Connect cable splice together.
4. Replace access covers with provided bottom board tape.

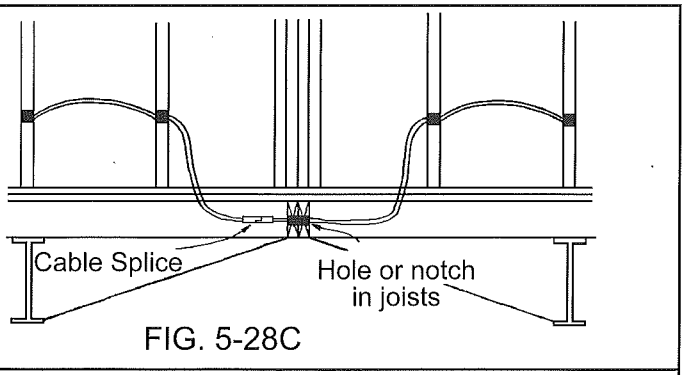

FIG. 5-28C

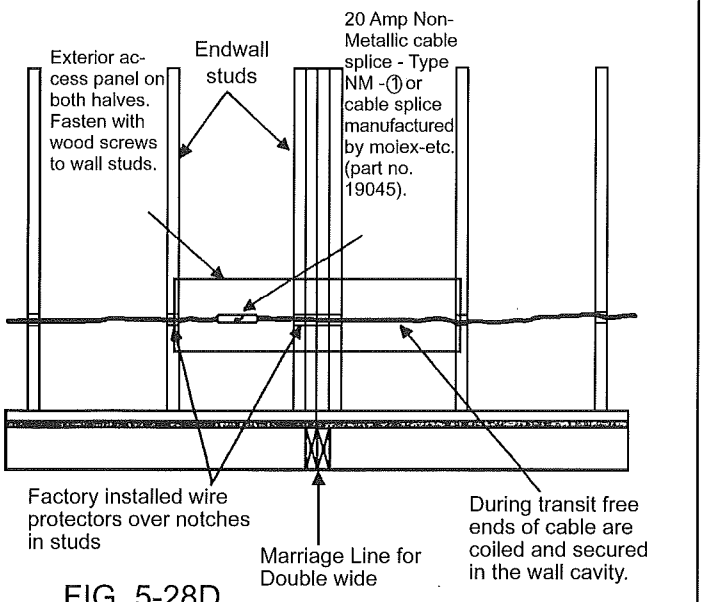

FIG. 5-28D

NOTE: If unit has multiple cable splices the circuits will be identified by the attached code markers.

Endwall Cable Splice

The correct procedure is as follows:

1. Remove access panels on exterior side of endwall (See Fig. 5-28D).
2. Uncoil wire located inside endwall.
3. Connect cable splice halves together.
4. Reinstall access panels.

Note: If unit has multiple cable splices the circuits will be identified by the attached code markers.

Heating Crossover

There are two basic hookup procedures for all designs. The first procedure is the standard design and is a single 12" diameter flexible duct. The second procedure is an optional design that includes a varying number of 5" or 6" crossover ducts that are installed in the floor.

The method of installation for the standard design is as follows:

1. Connect each end of the provided insulated 12" diameter flexible duct to the metal duct connector on each half of the home by sliding duct over metal tabs on duct connector.
2. After mechanical connections are made, tape each connection with 2-inch wide duct tape to ensure an airtight seal.
3. Permanently secure the crossover duct with straps as shown in Fig. 5-29. Do not allow duct to rest on the ground. Maintain at least a 4-inch clearance between duct and the ground.

The method of installation for optional design with standard frame is as follows:

1. Remove access panels at crossover ducts. The access panels are located below the floor.
2. Cross cut bottom board at 8" holes in reinforcing plates.
3. Extend the flexible ducts from each half through the access holes (See Fig. 5-29A).

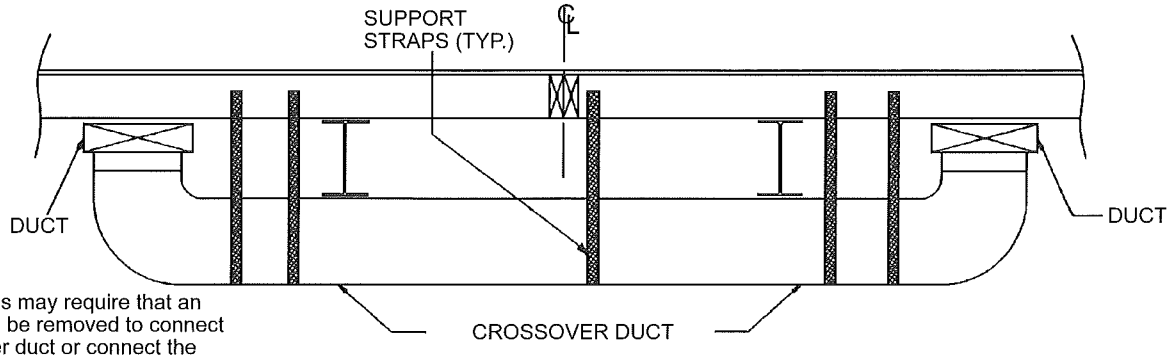

NOTE: Some models may require that an axle or axles be removed to connect the crossover duct or connect the home air distribution system to the heating - cooling appliance.

NOTE: 5 STRAPS AS SHOWN TO FLOOR JOISTS. MINIMUM CLEARANCE TO GROUND TO BE 4".

FIG. 5-29

UTILITY INTERCONNECTION

4. Connect the flexible ducts together per the provided manufacturer instructions using the splicing collar provided.
5. Install a strap around duct and attach to the rim joists.
6. Tape bottom board closed with provided tape.

The method of installation for the optional design with integral floor/frame or Perimeter frame is as follows:

1. Locate crossover locations as indicated by spray paint on rim joists and bottom board.
2. Cut out bottom board at rim joists for crossover connections.
3. Cut the bottom board below floor for access to flexible ducts (See Fig. 5-29A).
4. Extend the flexible ducts through the cutouts in the rim joists from the half with the furnace to the other half.
5. Connect the flexible ducts together per the provided manufacturer instructions using the splicing collar provided.
6. Push the floor insulation against rim joist and tape bottom board closed with provided tape.

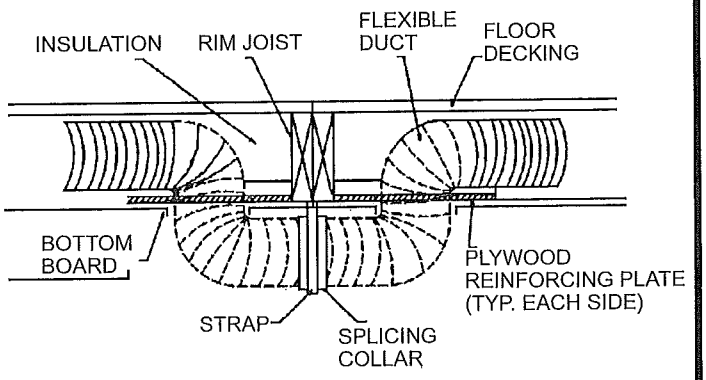

OPTIONAL CROSSOVER DUCTS FOR STANDARD FRAME

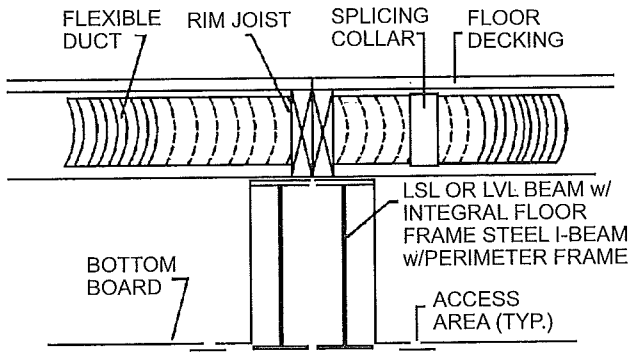

OPTIONAL CROSSOVER DUCTS FOR INTEGRAL FLOOR/FRAME OR PERIMETER FRAME.

FIG. 5-29A

Heating Crossover with V-Bonnet

Some double-wide units will require a V-Bonnet duct connector to be installed prior to connection of the crossover ducts. The proper method of installation is as follows:

1. Remove axle if required for access to furnace area.
2. Fit tabs inside V-Bonnet and secure with #8x3/4" screws in holes provided on tabs (3 per side — 12 total) (See Fig. 5-29B).
3. Install flexible crossover ducts per the standard crossover duct design described on the previous page.

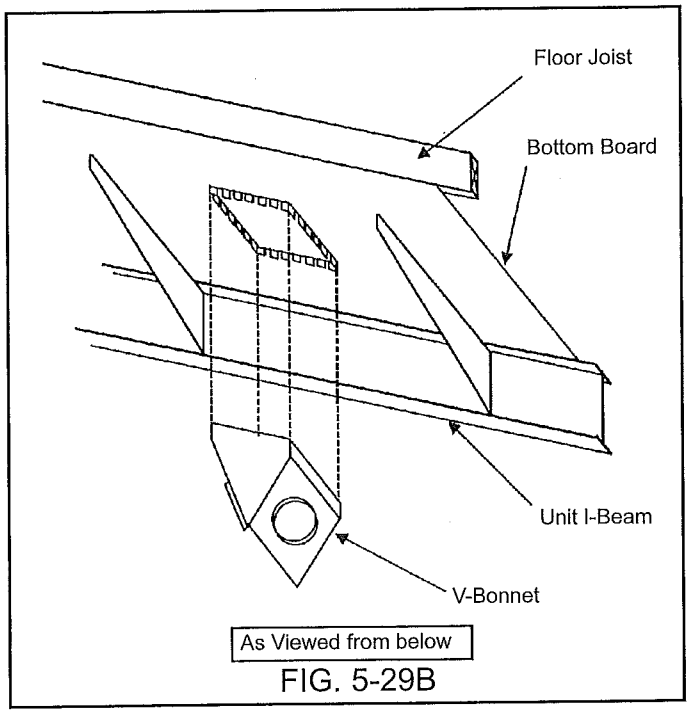

FIG. 5-29B

Gasline Crossover

Applicable only to models with gas appliances on both halves. The listed flexible connector supplied with the home must be used to make the connection. This connector will be located beneath the home.

NOTE: DO NOT USE TOOLS TO CONNECT OR REMOVE FLEXIBLE CONNECTOR QUICK DISCONNECT.

1. Remove protective caps from the connector.
2. Connect the quick disconnect fitting.
3. Test for leaks with soapy water.

Waterline Cross Connect.

Applicable only to models with plumbing on both halves (See Fig. 5-30, 5-31, and 5-31A).

1. Remove the shipping caps from water lines and install provided connector.
2. Check for leaks.
3. In areas where exposed piping is subject to freezing, protect exposed piping with heat tapes listed for use on manufactured homes, and insulation. It is recommended that only U.L. listed heat tapes be used and installed in accordance with their listing.

SET-UP PROCEDURES (Continued)

UTILITY INTERCONNECTION

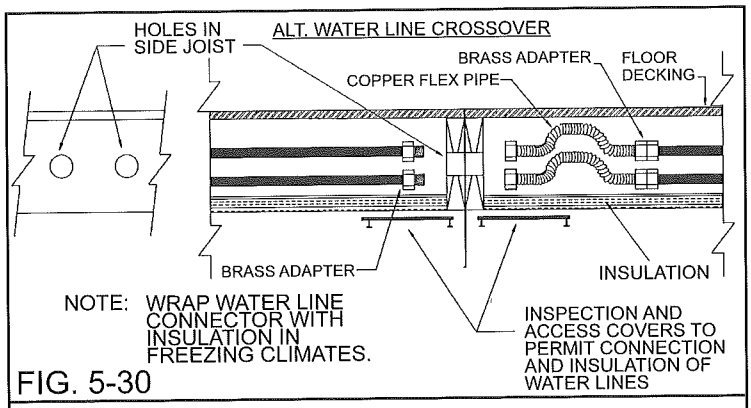

FIG. 5-30

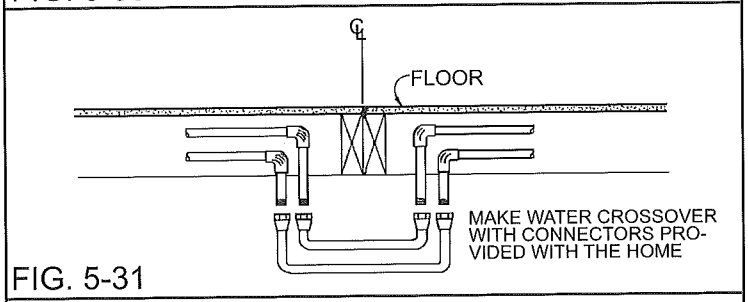

FIG. 5-31

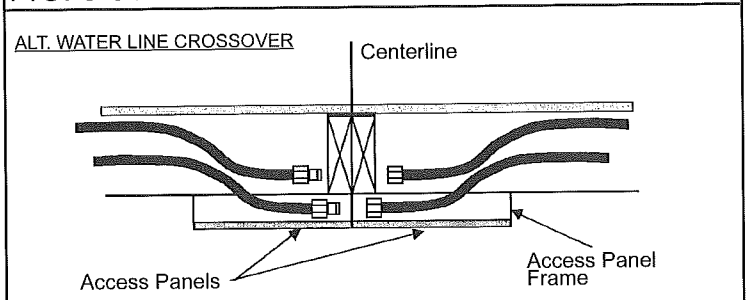

FIG. 5-31A

Drainage Line Cross Connect

Applicable only to models with plumbing on both halves. The connection may be made with field assembly of factory supplied parts (refer to drainage of 2 bath models, page 48), or when the below floor plumbing is factory installed, a flexible coupler is used as follows: Use only the approved flexible coupler provided (1-1/2 inch or 3 inch, as required). See Fig. 5-32.

1. Slip the flexible coupler over one end of the drainage line.
2. Align the pipes and center the coupler over the joint.
3. Tighten the clamps and check for leakage.

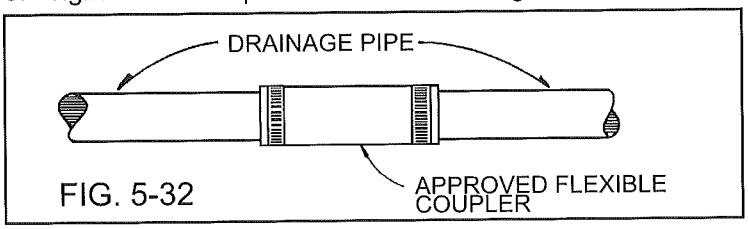

FIG. 5-32

METAL ROOF TIGHTENING

Metal roofs may be tightened by the use of bonded washers secured to the roof truss with #8 x 1-1/4" screws, placed in rows of four across with width of the roof and spaced at approximately 48" o.c. along the length of the roof. Care must be taken to assure that the screws are placed to penetrate the truss. After application, the screw heads and washers are to be sealed with a roof sealant material.

INSTALLATION OF EXTERIOR LIGHT FIXTURES

ELECTRICAL CONNECTIONS SHOULD BE MADE ONLY BY QUALIFIED PERSONNEL. MAKE SURE POWER IS OFF BEFORE INSTALLING LIGHT.

The correct procedure is as follows:

1. Install threaded tube in the strap secured to the fixture outlet box as shown in Fig. 5-33.
2. Apply caulking around base of light fixture to insure a water tight seal to side wall. (NOTE: On units with Masonite or vinyl siding, make certain the flashing ring is installed around outlet box.)
3. Connect wires, black to black, white to white, and ground to ground, using wire nuts.
4. Push wires into box and secure fixture in position using the nut provided on the threaded tube. Install the bulb.

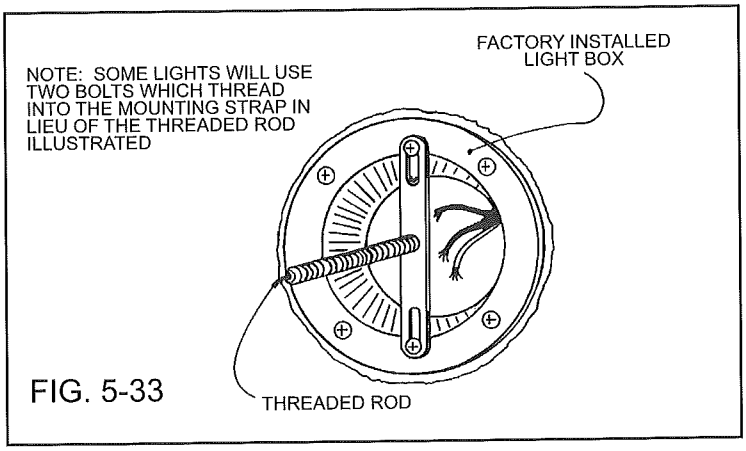

FIG. 5-33

VENTILATION OF SKIRTING AND CRAWL SPACE ENCLOSURE

Skirting or other crawl space enclosures, such as foundations, not only add to the appearance of the home but also provide important benefits in the reduction of heat loss. Enclosures also aid in reducing the danger and inconvenience of damaged plumbing through freeze-up.

Skyline Corporation recommends enclosing the underside of the home; however, it is very important that any enclosure be adequately ventilated. Ventilation openings need to be provided in the foundation or skirting along at least the two long walls of the home. The total area of ventilation openings should be at least 1 square foot for each 150 square feet of crawlspace area. An opening should be located within 3 ft. of each corner.

PORCHES AND DECKS

Some Skyline manufactured homes are constructed with factory-built porches or decks along the front, rear or main entry door side of the home. Porches and decks may be constructed with pressure treated wood floors which readily permit the passage of rain and/or snow through the floor. The area under porches or decks constructed with pressure treated decking lumber must be separated from the crawl space enclosure of the remainder of the home. Excessive moisture in the crawl space can be the cause of window or ceiling condensation and other problems associated with high moisture levels in the home.

CHAPTER 6

INSTALLATION OF OPTIONAL FEATURES

ELECTRIC DRYER VENTING

Homes factory equipped with an electric dryer receptacle vill also have the moisture-lint exhaust system roughed-in. To :omplete the moisture-lint exhaust system the following must)e performed:

1. Remove the covers over the vent hole in the floor.
2. Push the duct through the hole provided in the floor and connect to the dryer in accordance with the dryer manufacturer's instructions.

NOTE: Some dryer manufacturers require that metallic duct be connected to the dryer and routed through floors and/or sidewalls.

3. Secure the termination fitting at the outside edge of the floor:

NOTE: The termination fitting must be installed such that the dryer does not exhaust beneath the home. This may be accomplished by attaching the fitting to a piece of exterior grade plywood or, if the home is skirted, directly to the skirting.

4. Secure the flexible duct to the termination fitting with the provided clamp. (Do not use sheet metal screws or other devices which extend into the interior of the duct.)
5. Seal the duct penetration through the floor with a good grade of caulking.

CAUTION: MATERIALS WHICH MAY BE PROVIDED FOR THE MOISTURE-LINT EXHAUST SYSTEM ARE NOT ACCEPTABLE FOR INSTALLATION OF GAS DRYERS.

GAS DRYER INSTALLATION

Homes factory equipped with a gas dryer will also have the moisture-lint exhaust duct and termination fitting provided. To complete a roughed-in system follow steps 1-5 under Electric Dryer Venting.

Homes with "stubbed-in" gas service will also have the moisture-lint exhaust system roughed-in. However, the exhaust duct and termination fitting are not provided. Such termination fitting should be supplied with dryer at time of installation. The gas connection and completion of the moisture-lint exhaust system must be made by qualified personnel in accordance with the dryer manufacturer's installation instructions. The gas connection must be tested (See Utility Hook-up and Testing) prior to use of the appliance. To complete the moisture-lint exhaust system, follow steps 1-5 under Electric Dryer Venting.

GRILL/RANGE VENTING

When a home is provided with a combination range (cook top)/grill that contains its own exhaust system, the exhaust must be routed such that it does not terminate beneath the home. To complete the exhaust system the following must be performed:

1. Remove the cover on the factory installed exhaust pipe protruding from beneath the floor in the vicinity of the range.
2. Secure the provided termination fitting at the outside edge of the floor.
3. Run the provided flexible metallic duct between the elbow protruding from the floor and the termination fitting. Support the duct and make the connections per the manufacturer's installation instructions provided with the grill/range.

GAS WATER HEATER VENTING

Homes factory equipped with certain types of gas water heaters may require special provisions to ensure proper ventilation. If the gas water heater installed in your home is not independently vented to the exterior of the home through a grilled opening in an exterior water heater door, then the following provisions must be followed.

A. If the home is set on a crawlspace, or piers and skirting are used, then an air intake opening with a minimum free area of 32 square inches must be provided in the foundation wall or skirting. If the opening is covered by louvers or screen, the total free area must be 32 square inches. The air intake opening should be located as close as practical to the water heater location.
B. If your home is set on a basement and a factory installed basement exterior venting system has not been provided, then the following steps must be taken:

1. Fabricate a plenum box to encompass the air inlet assembly without alteration to the air inlet assembly itself. This plenum must have a minimum horizontal dimension of eight (8) inches. The minimum clearance between the air inlet assembly and the inner wall of the plenum shall be two (2) inches. The vertical height of the plenum shall be as necessary to accommodate the air inlet assembly without alteration. The air inlet assembly is a round tube that is extended from the bottom of the water heater through the floor.
2. To ensure proper air entry into the fabricated plenum box, a 6 inch minimum round (or equivalent cross-sectional area) duct is required. The duct shall be of a smooth surface, rigid variety (no flex pipe) and shall be connected to the plenum in a manner that does not reduce the cross sectional area of the pipe.
3. The air inlet shall be of damperless type and provide a free area not less than the cross-sectional area of the duct. A screen, if used, shall be 1/4 x 1/4 inch minimum.

PADDLE FAN INSTALLATION FOR DOUBLE-WIDE HOMES WIRED FOR MOUNTING ON CENTER BEAM

A. FLUSH RIDGE BEAM

For proper ceiling fan installation, an electric outlet box and the decorative center beam to contain the box have been provided for attachment to the ridge beam at the unit centerline.

CAUTION: BEFORE FOLLOWING THE STEP-BY-STEP PROCEDURE, BE SURE THAT POWER TO FAN WIRE IS OFF.

1. Remove the fan manufacturer's installation instructions from the package and determine the method of fan attachment to the beam. (Also see Fig. 6-1 below.)

2. If the center beam (shipped loose) does not contain a precut hole for the electrical box, cut a hole with a hole saw approximately 1/4" larger than the box diameter at the proper location (center line of hole should line up with location of supply wire through ceiling) and centered in the width of the beam.

3. Install the box in the hole and secure flange (plastic box only) to the center beam with 4 - #6 x 1" screws.

4. a. Insert the ceiling wire through a knockout hole in the side of the electrical box. NOTE: It may be necessary to cut a notch from the top on the supply wire side of the center beam hole to allow the supply wire to be inserted in electrical box without binding against center beam during installation.

   b. Leave approximately 4" of wire free in the box.

5. Secure the center beam in place over the center line joint. Be sure that the fan supply wire is not pinched or penetrated with beam fasteners.

6. Secure electrical box to ridge beam with #8 x 2 1/2" wood screws through the two holes in the top of the box.

7. Strip about 3/4" of insulation from the white and black conductor ends.

8. Position the noncombustible flash ring (provided) over the electrical box so that finished surface (adjacent to electrical box) which is to be covered by fan canopy is not exposed.

9. Follow the manufacturer's installation instructions for mounting the fan assembly to the box and for electrical wiring of the fan. Use provided electrical connectors for splicing wire. Be certain that the fan is grounded as specified in manufacturer's instructions and that wires are connected properly (white to white and black to black).

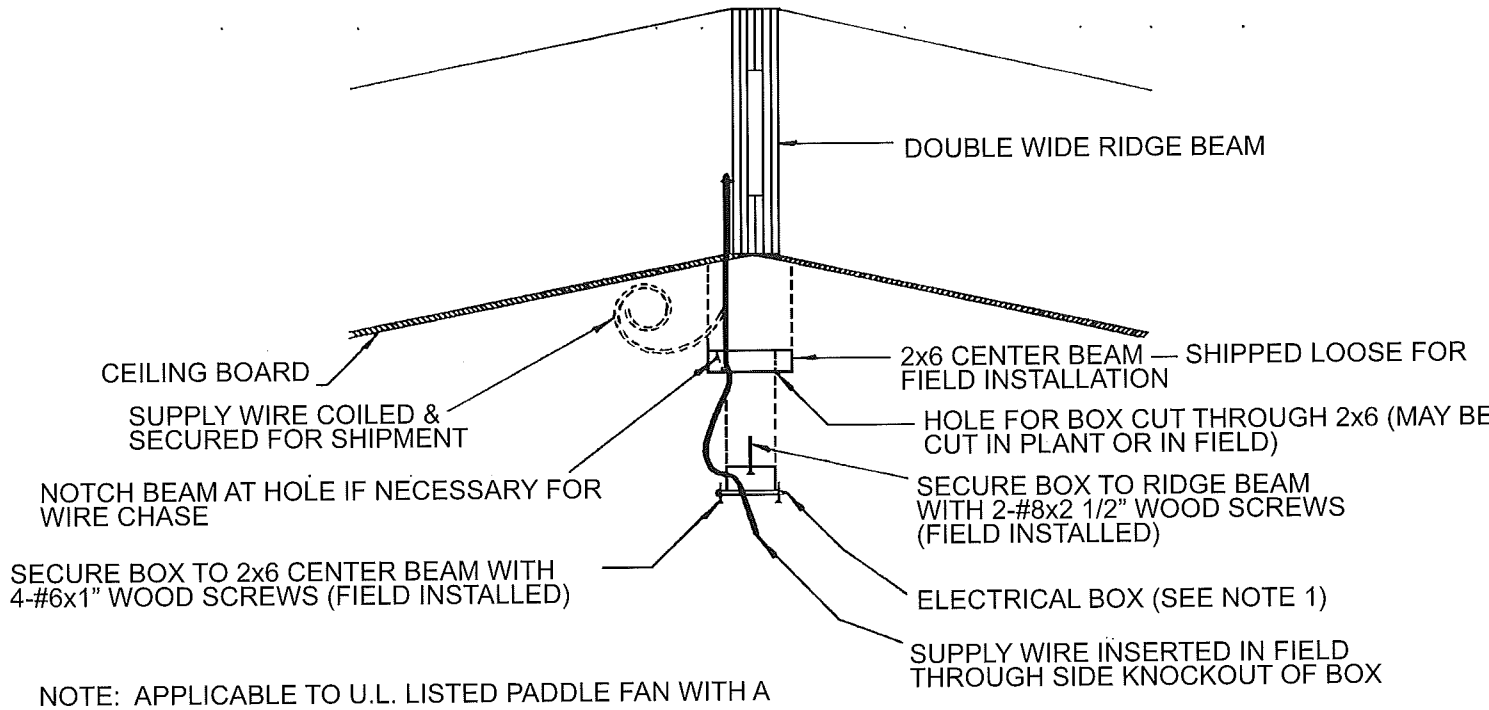

NOTE: APPLICABLE TO U.L. LISTED PADDLE FAN WITH A SWIVEL TYPE MOUNTING BRACKET.

FIG 6-1

B. PROTRUDING RIDGE BEAM

For proper ceiling fan installation, a prefabricated box has been provided and includes the electrical box for containment of the spliced wires with their connectors.

The prefab box is also designed to conceal the wire which is run through the ceiling where the fan is to be located.

CAUTION: BEFORE FOLLOWING THE STEP-BY-STEP PROCEDURE, BE SURE THAT POWER TO FAN WIRE IS OFF.

1. Remove the fan manufacturer's installation instructions from the package and determine the method of fan attachment to the beam. (Also see Fig. 6-2).
2. Insert the ceiling wire through a side knockout hole in the electrical box. Secure the wire in the electrical box clamp at a point approximately 4" from its end.
3. Place the prefab box in its final position on the beam and secure the box to the beam with #6x2" wood screws (provided) in the metal corner braces.
4. Strip about 3/4" of insulation from the white and black conductor ends.
5. Position the noncombustible flash ring (provided) over the electrical box so that the finished surface (adjacent to electrical box) which is to be covered by fan canopy is not exposed.
6. Follow the manufacturer's installation instructions for mounting the fan assembly to the box and for electrical wiring of the fan. Use provided electrical connectors for splicing wires. Be certain that fan is grounded as specified in manufacturer's instructions and that wires are connected properly (white to white and black to black).

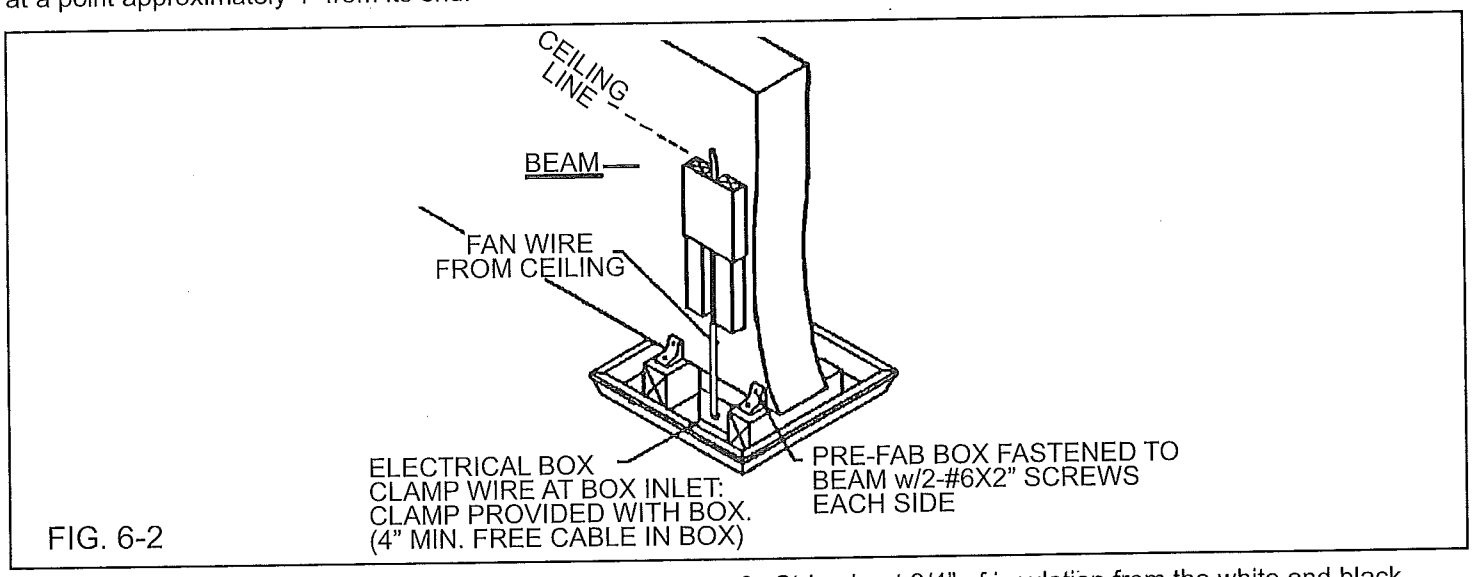

FIG. 6-2

C. FALSE RIDGE BEAM

For proper ceiling fan installation, an electrical box and a decorative foam block have been provided for attachment to the false beam at the unit centerline.

The prefab box is also designed to conceal the wire which is run through the ceiling where the fan is to be located.

CAUTION: BEFORE FOLLOWING THE STEP-BY-STEP PROCEDURE, BE SURE THAT POWER TO FAN WIRE IS OFF.

1. Remove the fan manufacturer's installation instructions from the package and determine the method of fan attachment to the beam (See Fig. 6-2A).
2. After ridge beam halves have been secured together, fasten bottom halves of false beam together with 16d nails 16" o.c. (max).
3. Attach gypsum close-off panel (provided) with staples 6" o.c. around perimeter.
4. Secure decorative foam block to false beam with 2-16d nails or 2-#8x3" screws.
5. Attach electrical box (U.L. listed for use with paddle fan) per its listing (installation) requirements (provided).
6. Strip about 3/4" of insulation from the white and black conductor ends.
7. Follow the manufacturer's installation instructions for mounting the fan assembly to the box and for electrical wiring of the fan. Use provided electrical connectors for splicing wires. Be certain that fan is grounded as specified in manufacturer's instructions and that wires are connected properly (white to white and black to black).

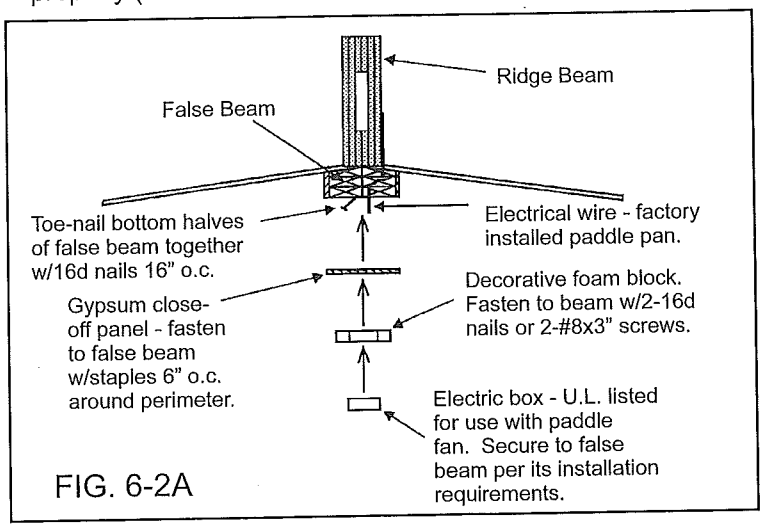

FIG. 6-2A

AIR CONDITIONING ELECTRICAL CONNECTION (Factory Provided Circuits)

THE ELECTRICAL CONNECTION SHOULD BE MADE ONLY BY QUALIFIED PERSONNEL. THE COMPLETED INSTALLATION MUST CONFORM TO ARTICLE 440 OF THE NATIONAL ELECTRICAL CODE AND APPLICABLE LOCAL CODES.

Factory installed branch circuits for air conditioning are indicated on the data plate under the heading "Rating of Factory Installed Circuit." The maximum full load ampere draw for the desired air conditioning unit must not exceed the indicated branch circuit rating. "A" coil air conditioning units installed must be listed for use with the furnace in this home; for air conditioning installation, see the instructions shipped with the air conditioner. If a self-contained air conditioner is to be installed and connected to the heating supply duct the installation must include a damper beneath the furnace to prevent cool air from "backing-up" into the furnace during the cooling mode and a damper at the air conditioner supply to prevent heated air from "backing-up" into the air conditioner during the heating mode. It is recommended to wrap the dampers with insulation.

The electrical connection is via a branch circuit terminating in a junction box beneath the home (See Fig. 6-3). The field installation wiring beyond the junction box must incorporate a fused disconnect (sized in accordance with NEC Article 440) located within sight of the condensing unit. The maximum fuse size to be used with fused disconnect is marked on the condenser data plate. The acceptability of the air conditioning equipment, rating the location of disconnect means, fuse type branch circuit protection, and connections to the equipment are to be determined by the local inspection authority.

For some models the electrical connection is made to the home via a separate rigid conduit. The conduit is 1" and is run from the panelboard and terminates below the bottom board. A PVC cap is cemented to the end of the conduit and this must be cut off to provide access to the panel board. Wiring is then installed from the panelboard to the air conditioner per all applicable NEC & local codes and all requirements listed above.

Condensation should not be allowed to drain under home.

NOTE: REFER TO N.E.C. AND AIR COND. INSTRUCTIONS FOR INSTALLATION REQUIREMENTS

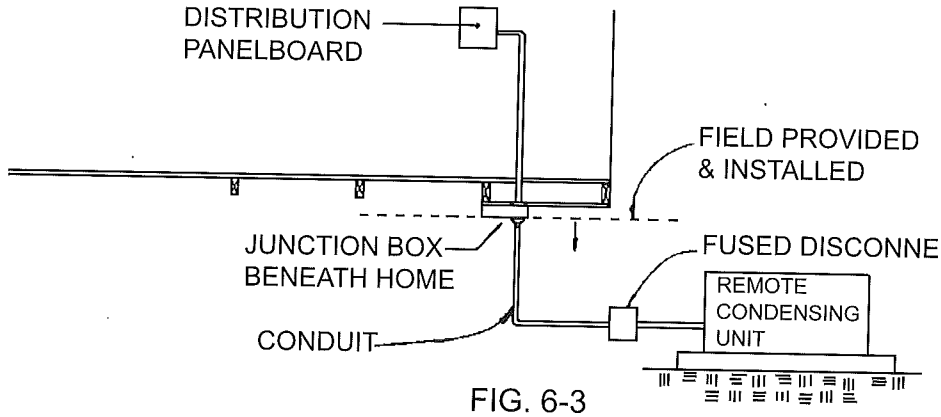

FIG. 6-3

NOTE: THE ELECTRICAL CONNECTION SHOULD BE MADE ONLY BY QUALIFIED PERSONNEL.

1. On models equipped for installation of optional evaporative cooler, install the roof-mounted cooler according to the instructions with the cooler. For coolers without an integral air duct the cooler box shall be lined with 0.013 in. metal. The factory installed branch circuit for the cooler is sized for a maximum cooler electrical load of 12 amperes. 120 V. AC, 60 Hz.
2. Remove the cover from the roof-mounted junction box and make the connection of the color-coded wires using the provided wire nuts. The electrical portion of the installation is now complete (See Fig. 6-4).

COLOR CODE

WHITE	Neutral
YELLOW	Pump
BLACK	High Fan
RED	Low Fan
GREEN	Ground

EVAPORATIVE COOLER

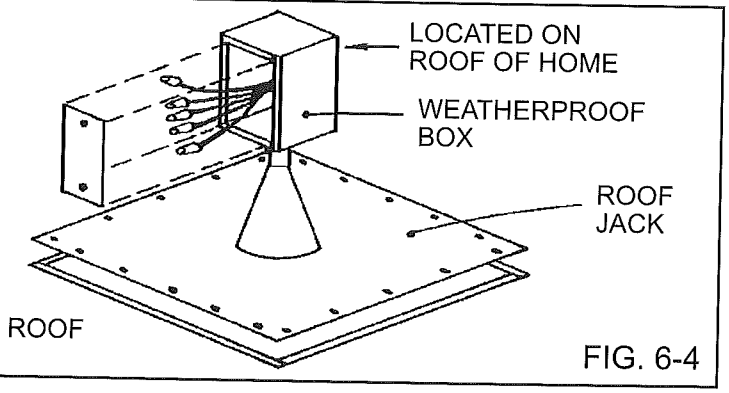

FIG. 6-4

STANDARD BLEND-AIR INSTALLATION WITH DEALER INSTALLED EXTERIOR HEATING/COOLING

Figure 6-5 below depicts the Evcon Standard Blend-Air installation used with homes designed for dealer installed exterior heating-cooling systems. The Evcon Standard Blend-Air unit provides whole-house ventilation and is designed to operate when the exterior heating or cooling system is in use. The following information is important when electrically interconnecting the Standard Blend-Air with the exterior heating-cooling unit system:

1. The Standard Blend-Air must be connected to a heating-cooling unit with transformer having at least a 40 Va. Capacity.
2. The wiring of 4-wire thermostat cable from the Blend-Air control to the exterior heating-cooling controls is to be as follows:
   -Green Connector - blower continuous run
   -Red connector - 24 v. supply
   -White connector - system heating
   -Yellow connector - system cooling

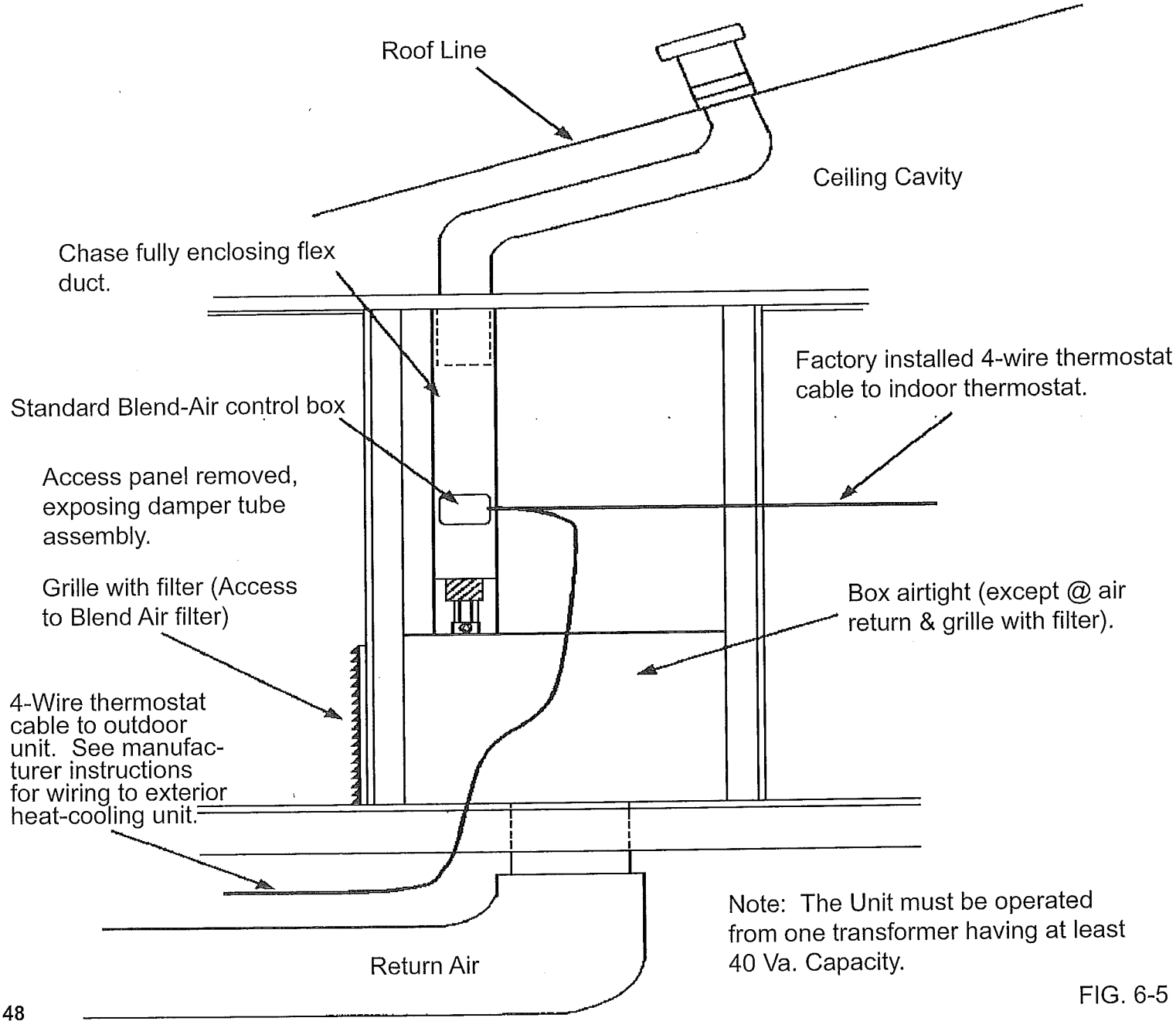

Note: The Unit must be operated from one transformer having at least 40 Va. Capacity.

FIG. 6-5

EXPANDING ROOMS, SLIDE-OUTS, ETC.

Where optional expanding rooms, slide-outs, tip-outs, etc. are provided, specific instructions and directions are provided for proper installation and set-up.

INSTALLATION OF SITE INSTALLED ATTACHED STRUCTURES

All site installed attached structures, including garages, porches, steps, stairways and landing must be designed and constructed to support all of their own dead load and all of the live load to which it will be subjected. Attached structures should be constructed in accordance with the manufacturer's installation instructions and all applicable local codes. In particular, attached garages generally require fire protection and GFCI electrical circuit protection as required by local code.

HINGED ROOFS AND EAVES

Where optional hinged roof and/or hinged or prefabricated field installed eaves are provided, supplemental installation instructions are provided.

CEILING (PADDLE) FANS

Site provided and installed ceiling fans are to be installed in accordance with the manufacturer's installation instructions. To reduce the risk of injury, the minimum dimension from the trailing edge of the fan blade to the floor must be in accordance with the manufacturer's requirements.

TELEPHONE AND CABLE TV

Careless installation of telephone and cable television lines may be hazardous. Electrical circuits, plumbing and duct work are contained in the floor and walls of the home. Avoid contact with these systems when drilling into and placing cables in these cavities. **FAILURE TO FOLLOW THESE INSTRUCTIONS MAY RESULT IN SERIOUS PERSONAL INJURY OR DEATH.**

FIREPLACE INSTALLATION

Because of transportation restrictions, fireplaces require on-site installation of additional section(s) of approved, listed chimney pipe, a spark arrestor and a rain cap assembly.

The fireplace manufacturer's installation instructions and all required components for proper installation are included in each home with a fireplace.

SITE INSTALLED FIREPLACE HEARTH EXTENSION

The home will be shipped with fireplace installed. The blocking between the bottom of the fireplace and the floor shall be removed. The carpet where the hearth is going to be placed shall be removed. A bead of noncombustible fireplace mortar or gasket cement shall be run to seal the joint between hearth extension and face of the fireplace. The edge of the hearth extension shall be placed under the fireplace surround and centered in front of the fireplace. The carpet tackstrip shall then be placed around the hearth to secure it. (See Fig. 6-6).

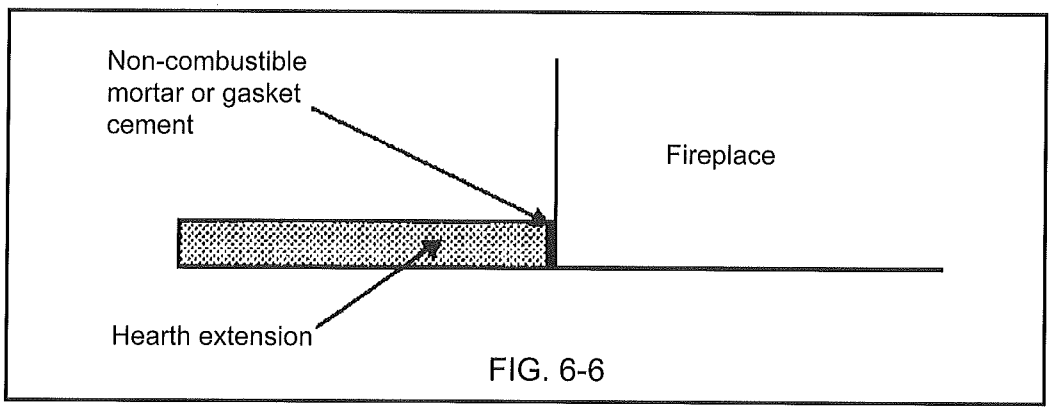

FIG. 6-6

FIELD INSTALLED TERMINATION OF FIREPLACE CHIMNEY.

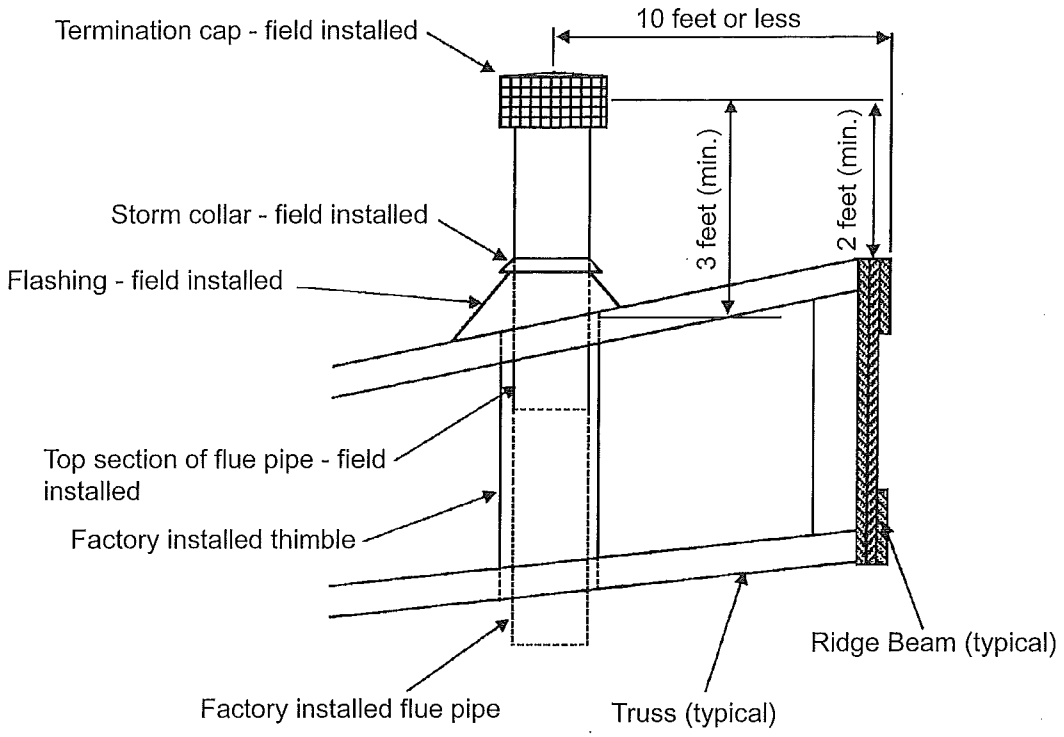

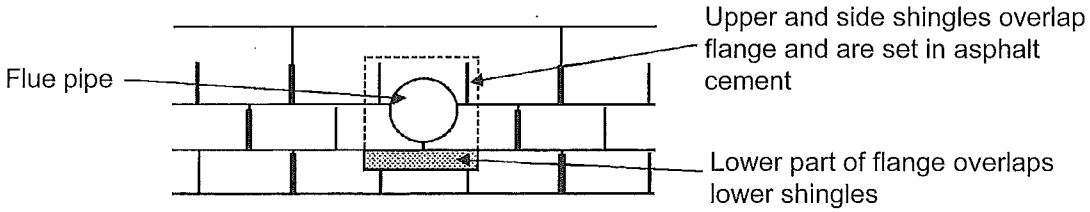

SHINGLE INSTALLATION AROUND FLUE PIPE

1) Install shingles up to edge of factory cut-out in roof decking. Cut shingles installed under roof flashing are set in asphalt cement.
2) Place flashing over pipe section and shingle and set in asphalt cement. Tack flashing to roof deck at top 2 corners with roofing nails.
3) Resume shingle application. Cut shingles in successive courses to fit around the pipe and embed them in asphalt cement where they overlap the flashing. Secure shingles with roofing nails through flashing and apply asphalt cement over nail heads.
4) The completed installation should appear as shown above, with the lower part of the flange overlapping the lower shingles and the side and upper shingle overlapping the flange.

NOTES:
1) The upper portion of the fireplace chimney assembly has been left off due to transportation height restrictions.
2) The final section of flue pipe, roof flashing, storm collar and termination cap for the fireplace are required to be field installed.
3) Remove temporary close-off material from roof and top of flue pipe that has been factory installed.
4) Install parts listed in 2 above per the fireplace manufacturer's installation instructions.
5) Install roof shingles around chimney pipe per instructions above or per ARMA residential asphalt roofing manual instructions.
6) All required parts for completion of chimney have been shipped with the home, including the manufacturer's installation instructions.
7) Applicable only to Coleman Deluxe II model, 36ECMII solid fuel burning fireplace.
8) All other aspects of the setup of the home are to be in accordance with this manual.

WARNING

This appliance has been shipped with the flue assembly partially disassembled. The flue assembly must be completed in accordance with the installation instructions prior to use of this appliance.

The label above has been placed on the fireplace in your home if the chimney assembly is required to be field completed.

CHAPTER 7

UTILITY SYSTEM CONNECTION AND TESTING

Many local jurisdictions have special requirements for utility connections and on-site inspection of these connections. Consult with the proper authorities prior to utility connection. Use only qualified service personnel, familiar with local codes and licensed where required.

The drainage and water systems were tested for leaks prior to shipment from the factory. It is essential that they be rechecked by qualified personnel for leaks that may have been caused by vibration during transportation.

WATER

The water system has been designed for an inlet water pressure of 80 psi. If the manufactured home is installed in areas where the water pressure exceeds 80 psi, a pressure reducing valve should be installed. The water system may be connected to any safe, potable water source. The connection is via a single 3/4 inch inlet beneath the home. A master shut-off full flow valve must be installed in the water supply line adjacent to the home; this valve should be a full port gate or ball valve with threaded or solder joints. After removing the aerators from all the faucets, open all the faucet valves and allow the water to run for 15 minutes. This should remove any foreign particles left in the line that might cause an unpleasant taste or become lodged at faucet washers and cause dripping faucets. All exposed water piping subject to freezing should be protected by insulation and electric heat tapes (with an integral thermostat) listed for use with manufactured homes. It is recommended that only UL listed heat tapes be used and installed in accordance with their installation instructions.

DRAINAGE — CONNECTION

The drainage connection is made at the 3-inch main drain outlet. Care should be exercised to slope and support the drain line from the home to the site sewage system (1/4" per foot slope).

DRAINAGE — 1, 1 1/2, 1 3/4 & 2 BATH

When applicable the parts required to bring all drain lines to a single point are provided as follows:

1. Pipe and fittings.
2. 1/4 pint of ABS solvent cement.
3. 10 feet of 3/4" x 28 gauge plumbing strap.
4. Ten 1/4" x 1" stove bolts.

The procedure for bringing all drain lines to a single point is as follows:

1. Remove caps on drain outlets and connect supplied parts together as shown by the drain line schematic shipped with the house. (Do not apply cement).
2. Check to be sure that the assembly has the proper 1/4 inch drop per foot.
3. Mark each joint to aid in reassembly. Start at outlet end of system and remove, cement and reassemble each slip joint one at a time. Be sure to apply the cement on both male and female ends with a good even coating.
4. Using the 3/4" x 28 gauge strapping, strap the drain line to the center crossmembers of the frame placing a strap at each member (4 feet apart). Use a 1/4" x 1" stove bolt to secure strap in place.
5. Connect home drain to site sewage system as for single bath previously discussed.
6. Check completed system for leaks.

WARNING: IMPROPER OR INADEQUATE TESTING, CONNECTION OR MODIFICATION OF ANY PART OF GAS OR ELECTRICAL SYSTEMS, ESPECIALLY BY UNQUALIFIED PERSONNEL, MAY BE EXTREMELY DANGEROUS AND MAY RESULT IN SERIOUS PERSONAL INJURY OR DEATH.

GAS — The gas piping system was designed for a range of 7 to 10 1/2" of water column for natural gas and 11 to 14" of water column for LP gas. The manufactured home gas supply pressure must be within this range for safe and efficient operation of the gas piping system.

UTILITY SYSTEM CONNECTION AND TESTING (Continued)

The gas piping system was pressure tested for leaks prior to shipment; however, it is essential that the system be retested by qualified personnel for leaks prior to use. (Many utility companies require this on-site test.) The instructions printed on the tag near the gas supply connection must be followed (See Fig. 7-1).

In some localities, utility companies and/or building inspectors may require additional tests as follows:

1. Isolate all appliances with appliance shut-off valves. PRESSURE SHALL BE MEASURED WITH A MERCURY MANOMETER OR SLOPE GAUGE CALIBRATED IN INCREMENTS OF NOT GREATER THAN 1/10 POUND.
2. Pressurize the system to 3 psi and isolate the source of pressure from the gas piping.
3. Check the gauge after 10 minutes; there should be no drop in pressure.
4. Check the piping to appliances by pressurizing to at least 10 inches but no more than 14 inches water column and applying a bubble solution to all joints and flexible connectors.

CAUTION: DO NOT PRESSURIZE THE SYSTEM ABOVE THE PRESSURES STATED ABOVE.

The connection to the gas supply should be made only by authorized representatives of the utility.

NOTE: BEFORE A TEST IS BEGUN, THE TEMPERATURE OF THE AMBIENT AIR AND OF THE PIPING SHOULD BE APPROXIMATELY THE SAME — CONDUCT THE TEST AT SUCH A TIME DURING THE DAY WHEN AIR TEMPERATURES WILL REMAIN CONSTANT.

Combination LP — Gas and Natural Gas System

This gas piping system is designed for use of either liquefied petroleum gas or natural gas.

NOTICE: BEFORE TURNING ON GAS BE CERTAIN APPLIANCES ARE DESIGNED FOR THE GAS CONNECTED AND ARE EQUIPPED WITH CORRECT ORIFICES. SECURELY CAP THIS INLET WHEN NOT CONNECTED FOR USE.

When connecting to lot outlet, use a listed gas supply connector for manufactured homes rated at ☐100,000 Btuh ☐250,000 Btuh or more.

Before turning on gas, make certain all gas connections have been made tight, all appliance valves are turned off, and any unconnected outlets are capped.

After turning on gas, test gas piping and connections to appliances for leakage with soapy water or bubble solution, and light all pilots.

Fig. 7-1

NOTE: DO NOT BUBBLE CHECK BRASS GAS LINE FITTINGS WITH SOLUTIONS CONTAINING AMMONIA.

ELECTRICAL

ALL ELECTRICAL WORK SHOULD BE PERFORMED ONLY BY QUALIFIED PERSONNEL. The electrical supply connection to the manufactured home may be made by any of the following methods depending on the manufactured home construction and electrical service:

a. Listed 50 ampere manufactured home power supply cord. (50 amp service only)

b. Permanent feeder connected to a factory installed mast weatherhead assembly. The routing, connection and support of the service drop is to be in accordance with local codes.

c. Permanent feeder routed to the distribution panel through the factory installed feeder raceway which terminates beneath the manufactured home. A junction box or approved fitting must be used to connect the manufactured home feeder raceway to the supply raceway beneath the manufactured home. The proper feeder conductor sizes and the required junction box sizes are given in Table 7.

After the connection has been made, the following tests should be conducted using approved test equipment:

1. Continuity test of circuit conductors
2. Polarity test
3. Continuity test of electrical grounding system

OUTSIDE DISTRIBUTION PANEL BOARD

Accessibility to distribution panel board, and the use of unit switches as disconnect means, is subject to the requirements of the local inspection authority.

ELECTRICAL SYSTEM TEST

With approved testing equipment, the following tests should be performed before connecting to the power source:

- Continuity Test of Circuit Conductors

A continuity test with all branch circuit breakers and switches controlling individual outlets in the "on" position should be conducted. There should be no evidence of connection between any of the supply conductors (including neutral) and the grounding circuit.

- Continuity Test of Electrical Grounding System

All noncurrent carrying metal parts of the electrical system including fixtures, appliances and the chassis of the home should be tested for continuity with the grounding circuit.

The following test should be conducted after connecting and energizing the electrical system:

- Polarity and Grounding Tests of 15 and 20 AMP Receptacle Outlets

With circuits and lighting circuits energized, use a receptacle polarity tester to check polarity and grounding of each receptacle outlet.

MANUFACTURED HOME ELECTRICAL SUPPLY REQUIREMENTS

TABLE 7

MAXIMUM LOAD & MAIN BREAKER SIZE (AMP)	CONDUCTOR SIZE[1] (AWG) (TWO LINE AND ONE NEUTRAL)	GROUNDING CONDUCTOR SIZE (AWG)	FACTORY INSTALLED FEEDER RACEWAY TRADE SIZE (IN.)	MINIMUM JUNCTION BOX SIZE
50	#6	#10	1"	6"x6"x6"
100	#3	#8	1-1/4"	8"x8"x4"
125	#2	#6	1-1/2"	10"x10"x4"
150	2-1/0 & 1-#2	#6	1-1/2"	10"x10"x4"
200	2-3/0 & 1-1/0	#6	2"	12"x12"x4"
225	2-3/0 & 1-1/0	#4	2-1/2"	15"x12"x4"

1. Conductor size and feeder raceway sized for copper, 75 degree C rated conductors, types RH, RHH, RHW without outer covering, THW or XHHW.

WARNING

CARELESS INSTALLATION OF TELEPHONE AND CABLE TELEVISION LINES MAY BE HAZARDOUS. The manufactured home walls contain electrical circuits and the floor section may contain electrical circuits, plumbing or duct work. Extreme care must be exercised during drilling through and placing of communication cables within these cavities, to avoid contact with these home systems. Such work should be performed only by qualified personnel. **FAILURE TO FOLLOW THESE INSTRUCTIONS MAY RESULT IN SERIOUS PERSONAL INJURY OR DEATH.**

UTILITY SYSTEM CONNECTION AND TESTING (Continued)

Multisection Frame Bonding

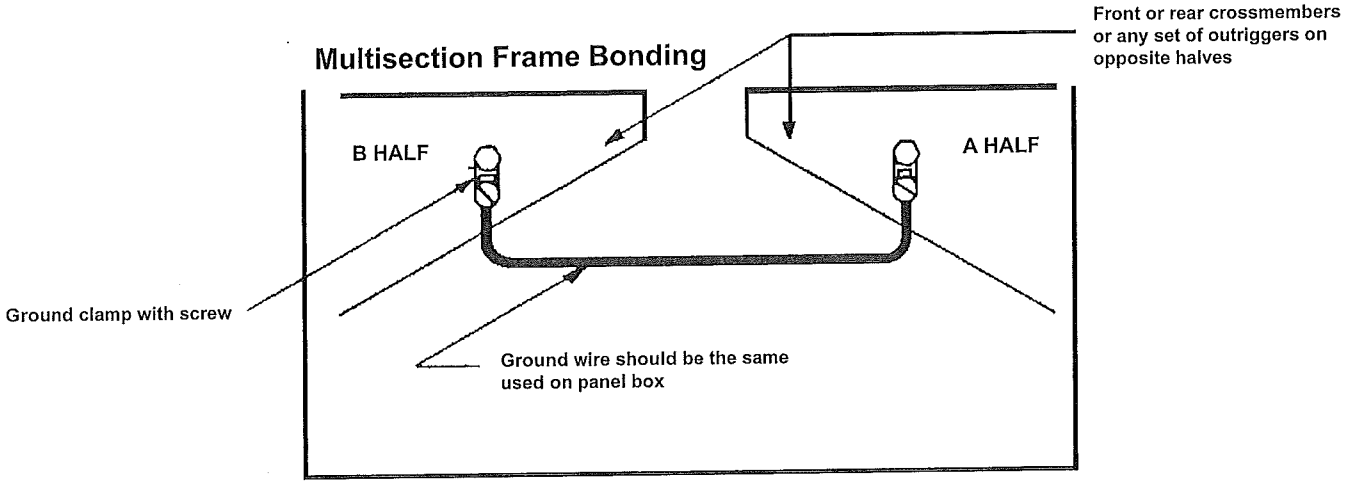

Typical Under Chassis Feed Connections

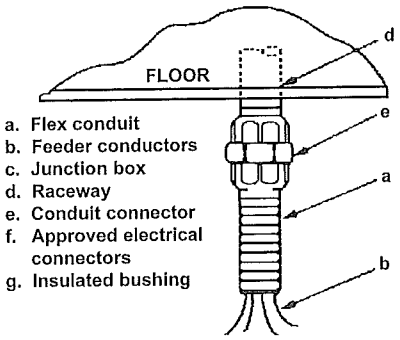

a. Flex conduit
b. Feeder conductors
c. Junction box
d. Raceway
e. Conduit connector
f. Approved electrical connectors
g. Insulated bushing

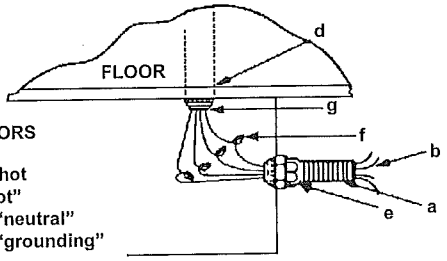

CONDUCTORS

B - Black "hot"
R - Red "hot"
W - White "neutral"
G - Green "grounding"

Typical Meter Base Installation and Grounding

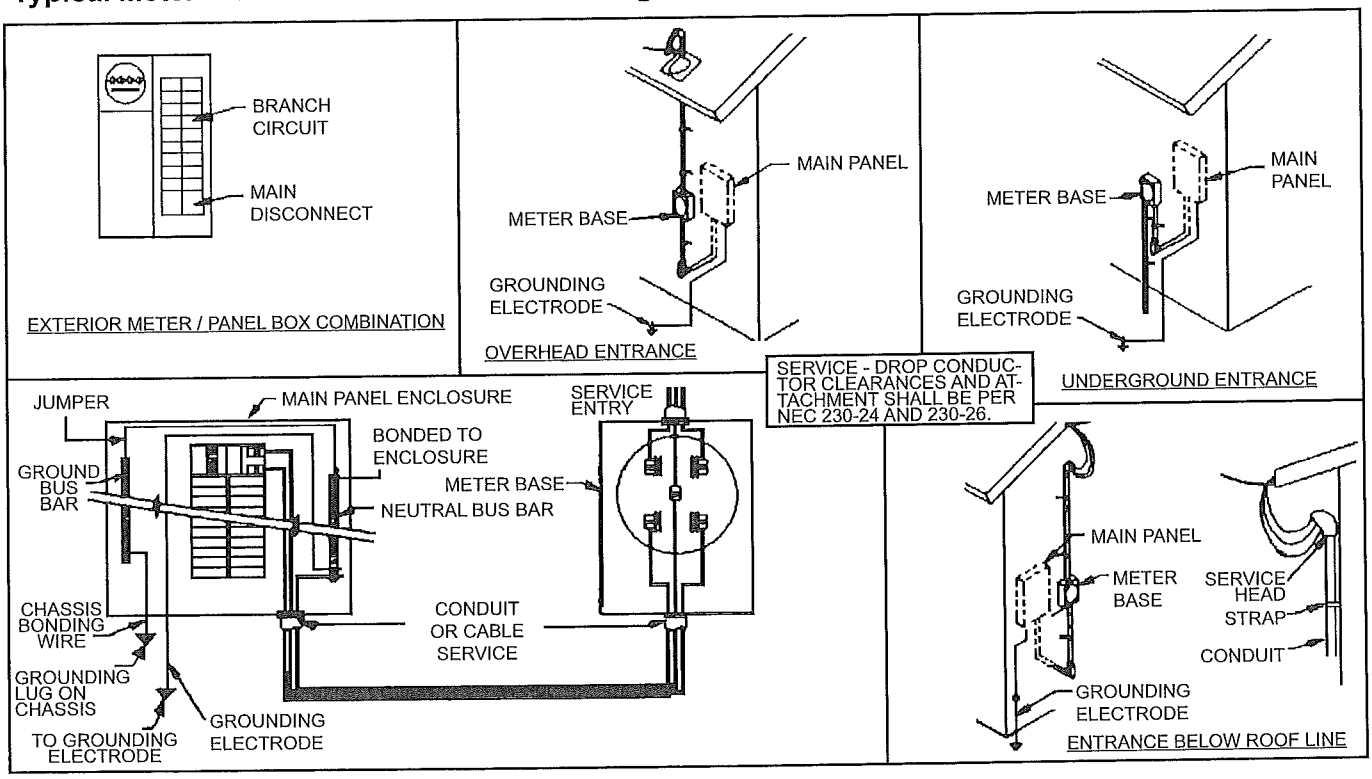

UTILITY SYSTEM CONNECTION AND TESTING (Continued)

METER BASE AND PANELBOARD WIRING WITH MASTHEAD

ALL ELECTRICAL WORK SHOULD BE PERFORMED ONLY BY QUALIFIED PERSONNEL.

For homes with a factory installed meter base and masthead, the correct procedure for wiring is as follows:

1. The outdoor (weatherproof) meter socket and service entrance panel may be mounted at any location on the exterior walls of the home with a fixed roof overhang.
2. Bond the service entrance conduit to the service entrance panel with an insulated bonding & grounding bushing. Use #6 (AWG) copper between ground lug on the bushing & terminal on the panel. Use #4 (AWG) copper between ground lug on the bushing & terminal on the panel with 200 and 225 amp service. Where threaded coupling and threaded bosses on enclosures with joints exist, they shall be made up wrench-tight in lieu of grounding bushing and strap.
3. A label is attached outside the home and near the service entrance conduit termination which reads: **"This connection for 120/240 volt, 3 Pole, 3 Wire, 60 Hertz ____ Ampere Service."** The correct ampere rating is marked in the blank space.
4. A red label is attached adjacent to the service entrance breaker, which states: **"WARNING - Do not provide electrical power until grounding electrode is installed and connected (see installation instructions)."**
5. The grounding conductor shall be connected to the grounding fitting with suitable lugs, pressure connectors, and clamps. Connections depending on solder shall not be used. Rod and pipe electrodes shall not be less than 8 feet (2.44m) in length and shall consist of the following materials, and shall be installed in the following manner:
   (1) Electrodes of pipe or conduit shall not be smaller than 3/4 inch trade steel and, where of iron or steel, shall have the outer surface galvanized or otherwise metal-coated for corrosion protection.
   (2) Electrodes of rods of steel or iron shall be at least 5/8 inch (15.87mm) in diameter. Nonferrous rods or their equivalent shall be listed and shall not be less than 1/2 inch (12.7mm) in diameter.
   (3) The electrode shall be installed such that at least 8 feet (2.44m) of length is in contact with the soil. It shall be driven to a depth of not less than 8 feet (2.44m) except that where rock bottom is encountered, the electrode shall be driven at an oblique angle not to exceed 45 degrees from the vertical or shall be buried in a trench that is at least 2-1/2 feet (762mm) deep. The upper end of the electrode shall be flush with or below ground level.

   Other methods of grounding electrode shall be in accordance with National Electric Code Article 250, Part H.
6. Equipment grounding connectors shall be bare, covered, or insulated. Covers or insulation shall be continuous and green, or green with one or more yellow stripes.
7. Approved fittings to be site installed on end of service entrance conduit to protect cables from abrasion.
8. Connect feeder conduit to conduit stub at distribution panelboard.
9. See Fig. 7-2 below.

Site Installed Masthead

The masthead may be shipped loose for field installation due to transportation height. The correct procedure for installing the masthead is as follows:

1. Remove the temporary transportation cover from the meter base.
2. Remove the 3" lag screws and the straps from the 2x4 blocks between the wall studs.
3. Install the masthead and the feeder conductors as shown in Fig. 7-2 below.
4. Reinstall the 3" lag screws and the straps over the conduit.
5. Note that all the conductors are to extend 18" (min.) from the weather head. The masthead shall extend at least 30" (min.) above the roof line.

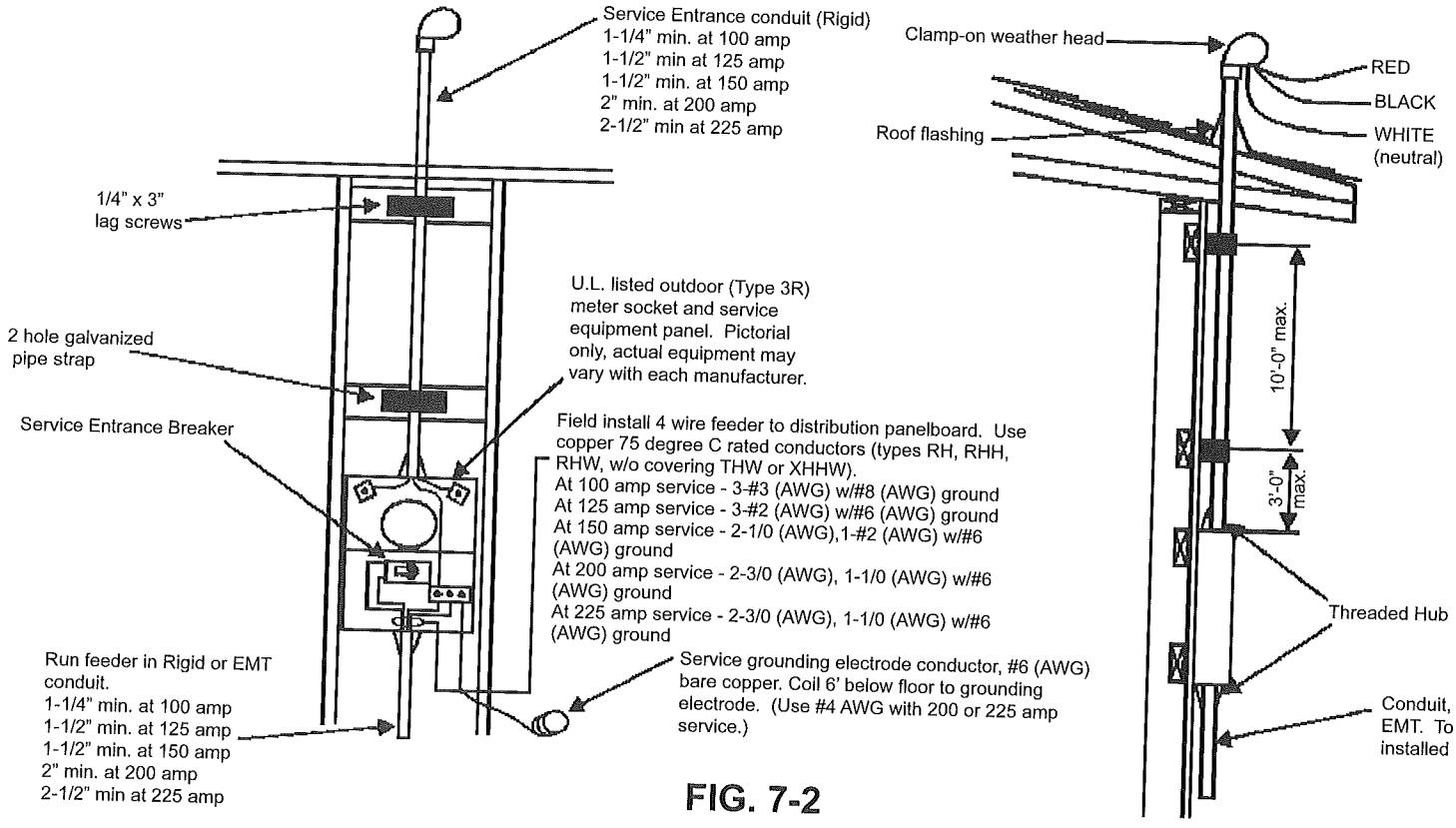

FIG. 7-2

CHAPTER 8

PROTECTIVE WINDOW COVERINGS

If your home is destined to be set in Wind Zones II or III, then it has been designed to install protective window and door coverings, in the event of a windstorm. Two different types of protective coverings are available. Your home may have either, or both of these types.

The first type of protective window covering is to attach plywood to a 2 x 4 member that has been installed around window and door openings. The plywood is attached to the 2 x 4 members with #8 wood screws. The type of plywood, screw length, and screw spacing will vary with the window or door size. See Table 8 for these requirements. Note that the window sizes listed in Table 8 are the small dimension of the window or door (See Figure 8-1).

Large openings (such as sliding glass doors) are required to be covered with a plywood and lumber frame assembly. See Table 8 to determine when this is required, and Figure 8-2 for frame construction.

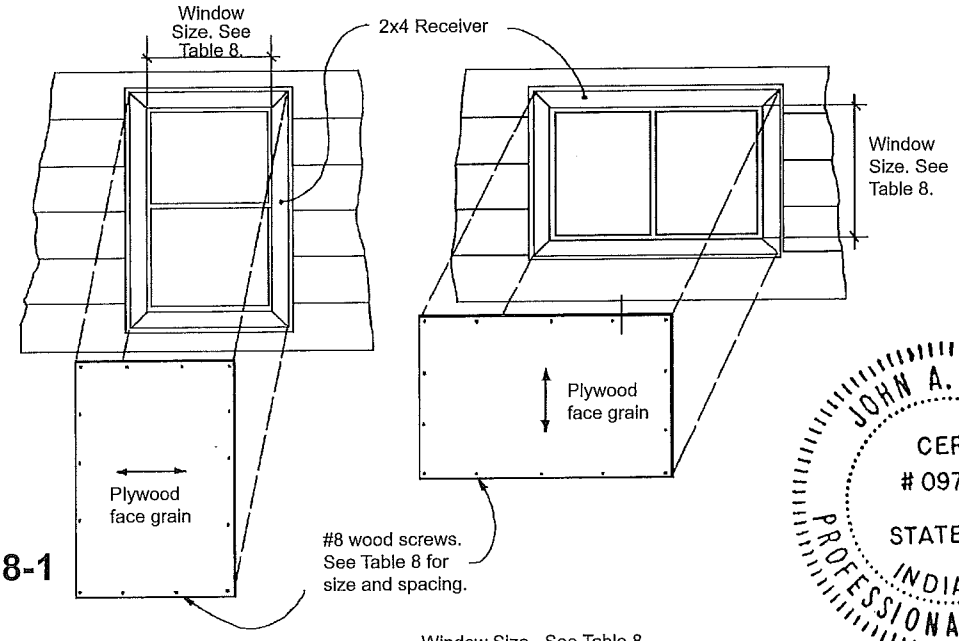

FIG. 8-1

JOHN A. MIKEL
CERT # 09703
STATE OF INDIANA
PROFESSIONAL ENGINEER
J. a. Mikel 9-1-94

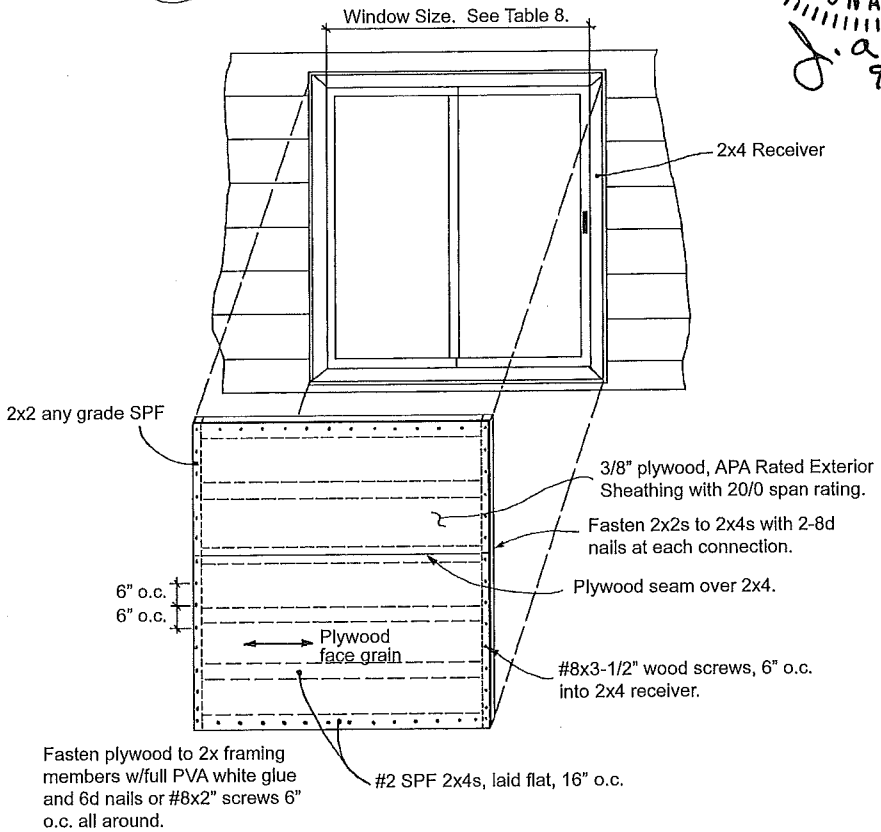

FIG. 8-2

TABLE 8

	PLYWOOD TYPE REQUIREMENTS				
	WIND ZONE II		WIND ZONE III		
MAXIMUM WINDOW SIZE	STANDARD WALL AREA	WALL AREA WITHIN 3' OF CORNER	STANDARD WALL AREA	WALL AREA WITHIN 3' OF CORNER	WOOD SCREW SPACING
14.5"	1	1	1	1	16" O.C.
24.5"	2	3	3	4	16" O.C.
30.5"	4	5	5	7	16" O.C.
36.5"	6	7	6	8	12" O.C.
40"	7	8	8	9	12" O.C.
46.5"	8	10	10	10	10" O.C.
72"	10	10	10	10	6" O.C.

All plywood for protective window coverings is APA rated exterior sheathing. Thickness and span ratings will vary with window or door size. Plywood listed below, with a higher number than is required by Table 8, may be substituted for a lower numbered plywood.

1. 3/8" with 20/0 span rating. Fasten to receiver w/#8x2" wood screws.
2. 1/2" with 24/0 span rating. Fasten to receiver w/#8x2" wood screws.
3. 3/8" with 24/0 span rating. Fasten to receiver w/#8x2" wood screws.
4. 1/2" with 32/16 span rating. Fasten to receiver w/#8x2" wood screws.
5. 5/8" with 32/16 span rating. Fasten to receiver w/#8x2-1/4" wood screws.
6. 3/4" with 40/20 span rating. Fasten to receiver w/#8x2-1/4" wood screws.
7. 5/8" with 40/20 span rating. Fasten to receiver w/#8x2-1/4" wood screws.
8. 7/8" with 48/24 span rating. Fasten to receiver w/#8x2-1/2" wood screws.
9. 3/4" with 48/24 span rating. Fasten to receiver w/#8x2-1/4" wood screws.
10. Plywood with wood frame required.

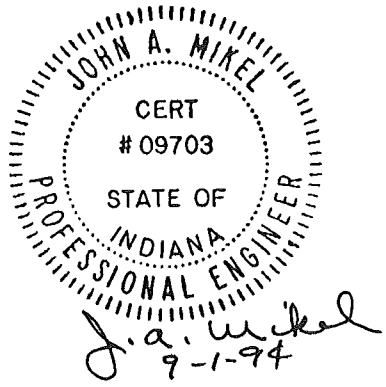

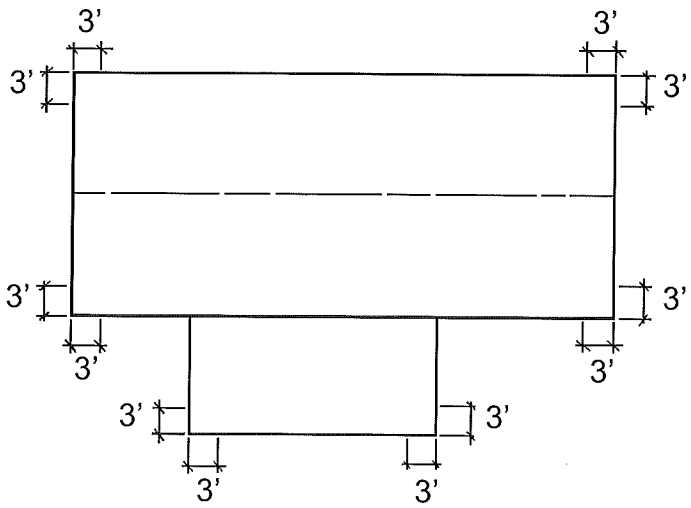

FIG. 8-3

In the event of a windstorm, the corners of this home will sustain higher wind pressure than the rest of the home. Therefore, it is required that windows and doors located within 3 feet of any corner be designed to withstand these higher pressures. Figure 8-3 shows the typical locations of the corners. Table 8 has separate columns indicating the plywood requirements for standard wall area and wall area that is within 3 feet of a corner.

After the windstorm is over and the plywood has been removed, all holes made by the screws in the 2 x 4s should be filled with a weather-resistant caulk.

PROTECTIVE WINDOW COVERINGS (Continued)

The second type of protective covering is to attach 3/4" plywood directly to the window frame. The plywood is attached to the window frame with #8 screws around the windows frame (top, bottom and sides). The specific instructions for each window manufacturer are shown below and on the next page.

WARNING: STORM SHUTTERS CANNOT WITHSTAND SEVERE STORMS. TO AVOID PERSONAL INJURY OR DEATH, CONTACT LOCAL EMERGENCY SERVICES NOW TO IDENTIFY EMERGENCY SHELTER IN THE EVENT OF SEVERE WEATHER.

This direct fastening application was designed and tested for use on Philips Products series #22, 23 and 24 lap windows. Do not use on any other products.

DUE TO THE LIMITED TIME BETWEEN WHEN A STORM WARNING IS ISSUED AND WHEN THE STORM COULD HIT AT YOUR LOCATION, WE RECOMMEND YOU DO THE FOLLOWING BEFORE A STORM WARNING IS ISSUED:

1. Purchase #8 x 1" sheet metal screws (enough for all the windows).
2. Buy shutters and get them cut to size, and marked. The shutters must be 3/4" thick plywood.
3. Store shutters and screws together in a dry place where they will be accessible.

SCREW LOCATION DETAIL

SCREW LOCATION DETAIL

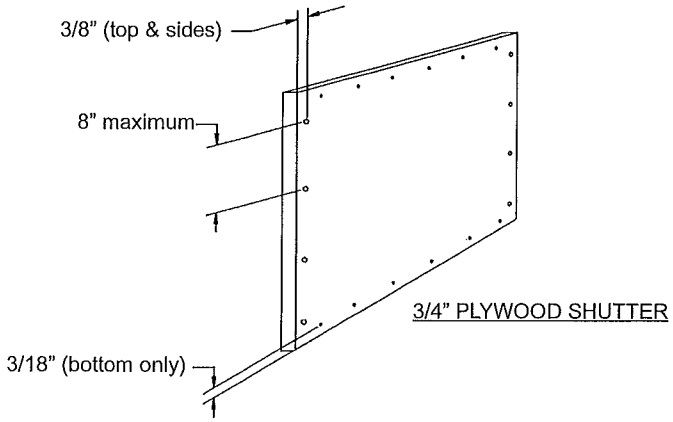

INSTRUCTIONS FOR INSTALLING SHUTTERS ONTO A PHILIPS PRODUCTS LAP MOUNTED ALUMINUM WINDOW

1. For each window size, measure the width and height of the exterior flange of the window. (These become the shutter dimensions.)
2. Determine how many shutters of this size are needed and get them cut to the proper dimensions.
3. Mark each shutter as to where on the home it goes, as well as marking which end goes up.
4. Mark the screw locations on the shutter (as shown below).
5. With the help of an assistant, lift the shutter up to the window and center it on the window.
6. Position the shutter so that the bottom edge of the plywood is even with the bottom of the exterior flange of the frame sill.
7. Fasten the shutter to the window with #8 x 1" sheet metal screws. Make certain the shutter does not shift out of position.

VERTICAL CROSS SECTION OF SHUTTER ATTACHED TO FRAME HEAD AND SILL

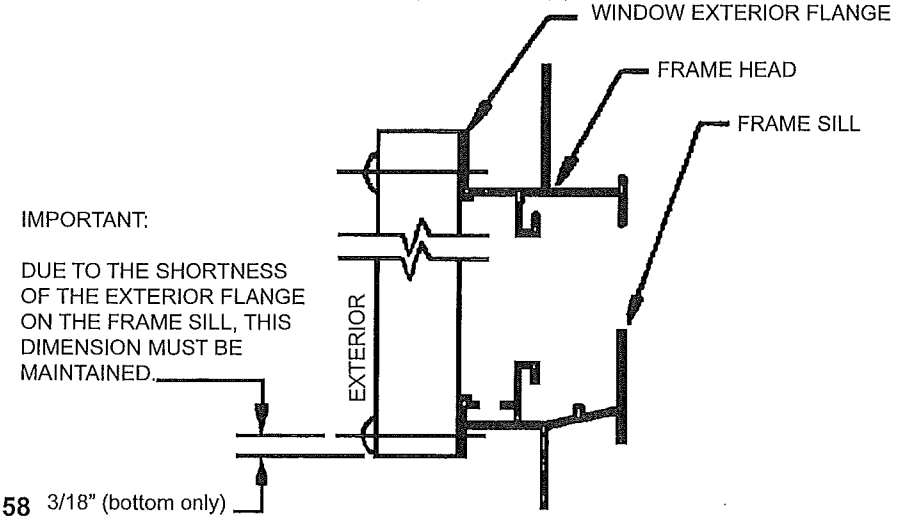

HORIZONTAL CROSS SECTION OF A TYPICAL ALUMINUM WINDOW INSTALLATION WITH AN ATTACHED STORM SHUTTER

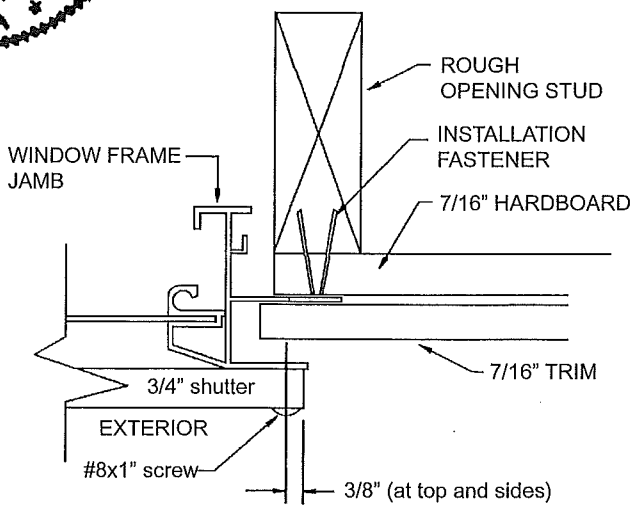

Kinro

500 AIRPORT DR. MANSFIELD, TEXAS 76063 (817)473-4421

INSTALLATION OF PROTECTIVE COVERING AS REQUIRED BY H.U.D. FOR ZONE II AND III

The following pages illustrate the application of an exterior window protection in the event of storms (such as hurricanes) as required by H.U.D.

Please Note: Installation of protective coverings (such as those listed below) will negate egress of the window. Homes with protective coverings (such as those listed below) cannot be occupied while the coverings are in place.

Parts Required: 1. 3/4" plywood — enough for each window in the home.
2. #8 x 1" wood screws or longer (see below for quantity).

The installation steps apply to both the vertical and horizontal sides of window. The size of the window will affect the number of fasteners needed.

For windows with a face measurement of 30" wide by 30" high (or any smaller size), install 3 fasteners, spaced eight (8) to twelve (12) inches apart on the head and on the sill. Install four (4) fasteners, spaced eight (8) to twelve (12) inches apart on both the left and right frame sides.

For windows larger than 30" x 30" with 46" x 60" being the maximum size, add one fastener to each side for each additional eight (8) to twelve (12) inches in width and height.

To determine the plywood size, (use 3/4" thick plywood) measure the width and height of the outside (exposed) return fin (edge to edge).

Position plywood over the window. With plywood supported, drive one fastener through the plywood and window return fin near center of the window sill. Repeat this procedure for the other required sill fasteners. With covering attached at sill, continue driving fasteners around perimeter of the plywood using the above spacing formula.

After the storm has passed, reverse the above procedure to remove the covering. Store materials for future use.

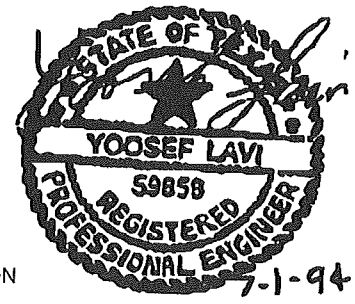

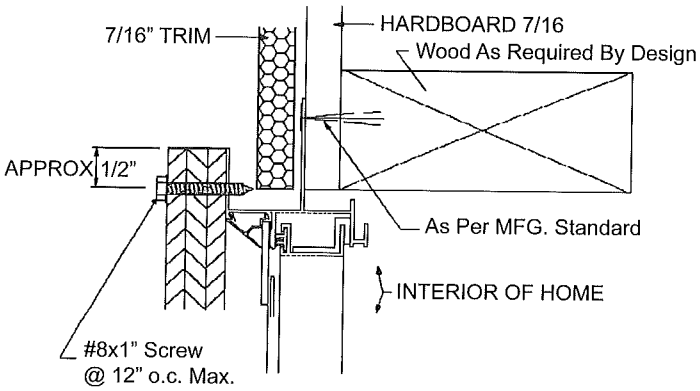

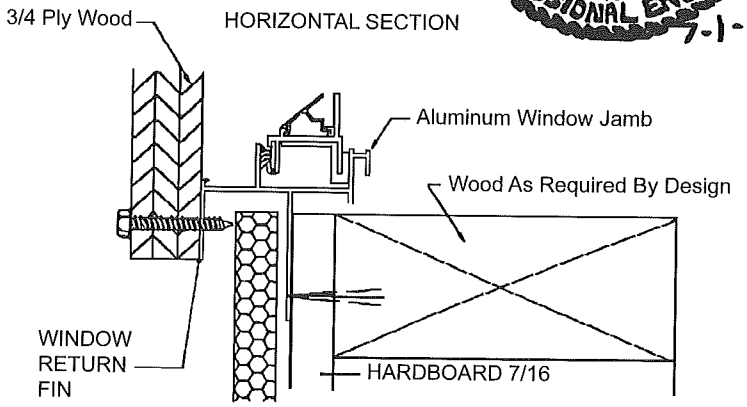

PROTECTIVE WINDOW COVERINGS (Continued)

Kinro

500 AIRPORT DR. MANSFIELD, TEXAS 76063
(817)473-4421

Installation of Protective Covering as required by H.U.D. for Zone II and III

The following pages illustrate the application of an exterior window protection in the event of storms (such as hurricanes) as required by HUD.

Please note: Installation of protective coverings (such as those listed below) will negate egress of the window. Homes with protective coverings (such as those listed below) cannot be occupied while the coverings are in place.

Parts required: 1. 3/4" plywood — enough for each window in the home.
2. #8 x 1 1/4" OR 1 1/2" wood screws (see below for quantity).

The installation steps apply to both the vertical and horizontal sides of windows. The size of the window will affect the number of fasteners needed.

For windows with a face measurement of 30" wide x 30" high (or any smaller size), install 3 fasteners, spaced eight (8) to twelve (12) inches apart on the head and on the sill. Install four (4) fasteners, spaced eight (8) to twelve (12) inches apart on both the left and right frame sides.

For windows larger than 30" x 30" with 46" x 60" being the maximum size, add one fastener to each side for each additional eight (8) to twelve (12) inches in width and height.

To determine the plywood size, (use 3/4" thick plywood) measure the width and height of the return fin (edge to edge).

Position plywood over the window. With plywood supported, drive one fastener through the plywood and window nailing fin near center of window sill. Repeat this procedure for the other required sill fasteners. With covering attached at sill, continue driving fasteners around perimeter of the plywood using the above spacing formula.

After the storm has passed, reverse the above procedure to remove the covering. Store materials for future use. Be sure to fill all holes left by the removal of the screws with a suitable silicone type sealant. Material should have a long life rating. This will prevent water and air from entering the home.

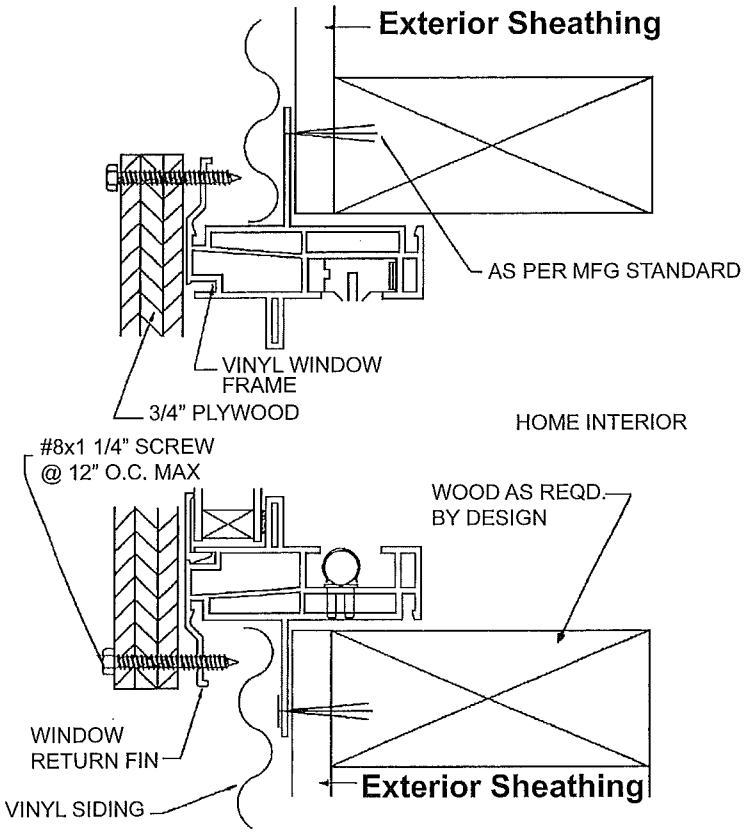

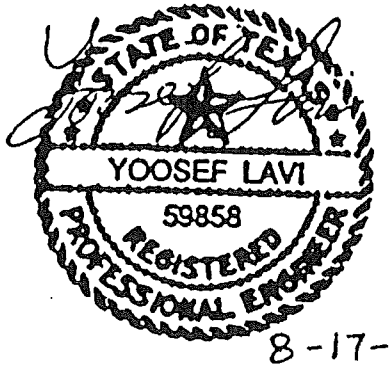

PROTECTIVE WINDOW COVERINGS (Continued)

Protective coverings may also be installed over doors and sliding glass doors in a different manner than described previously. First, remove the mounting screws holding the door frame to the exterior wall. Then place the plywood (or wood frame) from Table 8 over the door opening and fasten the plywood and door frame back into the wall studs through the same holes in the door frame. Use #8 x 3" wood screws 12" o.c. for doors. Use #8 x 4" wood screws 6" o.c. for sliding glass doors. See Figure 8-6 for a typical application of this type of protective covering.

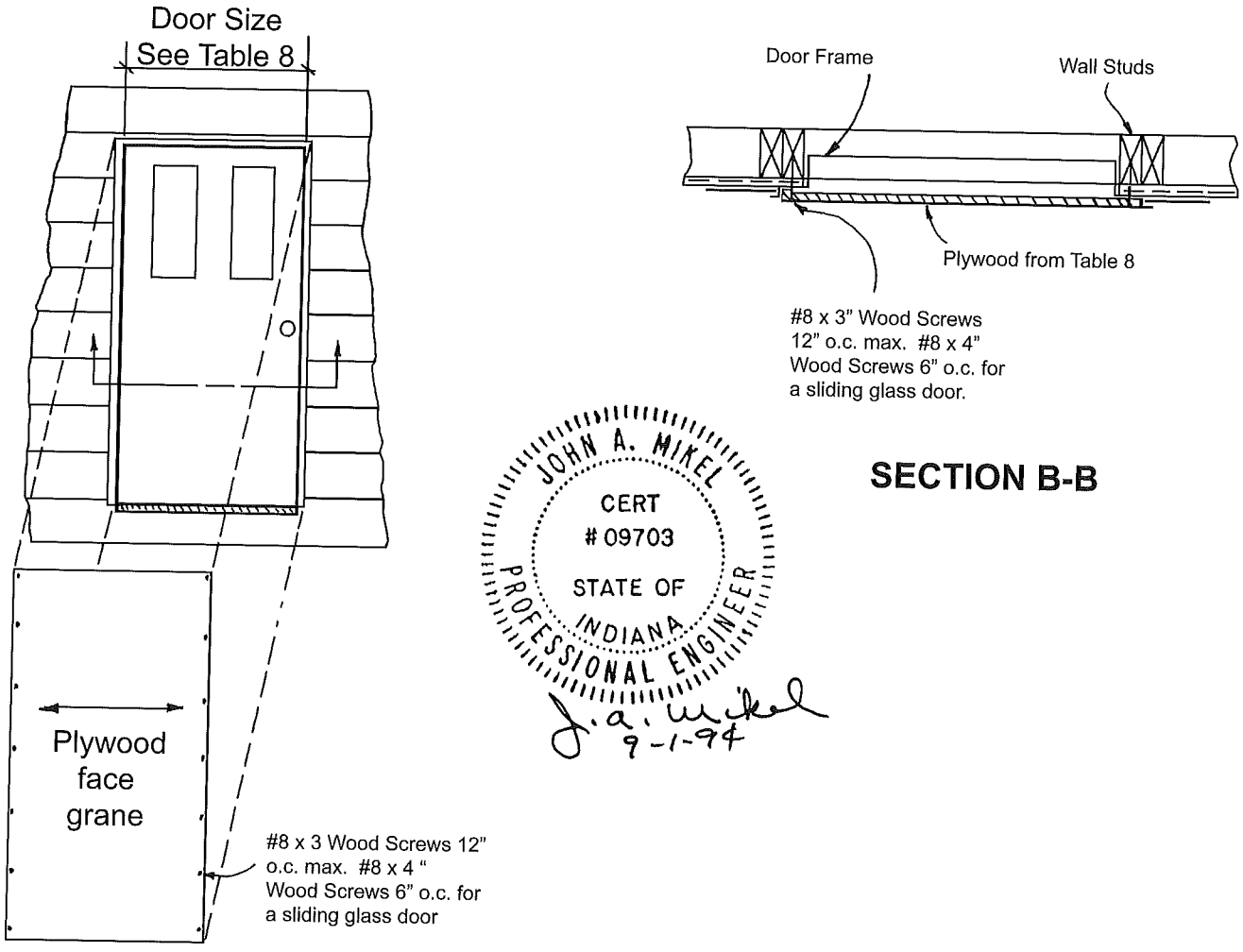

FIG. 8-6

Due to the limited time between when a storm warning is issued and when the storm could hit at your location, Skyline recommends that the items necessary for the protective coverings be purchased and prepared before a storm warning is issued. Cut plywood to size and mark it relative to window/door location. Store plywood and fasteners together in a dry place where it will be accessible. Once the protective coverings have been installed, the home should not be occupied.

CHAPTER 9

FINAL INSPECTION

Make a final inspection when home installation is complete to make sure that no items have been overlooked and that all work was done properly. Place special emphasis on the following "checklist" items:

Water and Drain System. All water and drain systems work properly and do not leak.

Appliance Function and Operation. All fixtures and appliances have been tested and work properly.

Windows, Doors and Drawers. All windows, doors and drawers work properly.

Egress Windows. One window in each bedroom is designated as a secondary exit to be used in case of emergency. Each exit window is labeled as such with operating instructions. All shipping hardware should be removed, and the window should operate as explained in the window manufacturer's instructions.

Exterior Siding and Trim. There are no gaps, voids, or missing fasteners, and all seams are sealed.

Stack Heads and Vent Pipe Flashings on Roof. All stack head or vent pipe flashings are properly attached and sealed.

Composition Roof. All shingles are properly attached, none are loose or missing, and all holes are filled.

Skirting Ventilation. The skirting around the home has non-closing vents, located at or near each corner as high as possible to cross-ventilate the entire space under the home. The free area of these vents must be equal to at least one-square foot for every 150 square feet of floor area of the home. The vent size must be increased to allow for insect screens, slats, louvers, etc., used over the open vent area.

Low-Hanging Trees and Bushes. If there are any low-hanging trees or bushes near the home, trim or cut them. Think about the plants' possible movement during windy conditions or when covered by snow or ice.

Exhaust Fan Operation and Air Flow. Check all exhaust fans for proper operation and air flow.

Bottomboard. Carefully inspect the bottom covering of the home for loosening or tears from installation of pipes or wires. Seal openings around the floor perimeter, pipes or pipe hangers and splits or tears with weather-resistant tape.

Anchors and Straps. Be sure the correct number of anchors have been installed at the proper angle, and that all straps have been tightened.

Interior Details. Inspect for, and correct, all interior finishing details, such as loose molding, carpet seams, etc. The retailers' representative should inspect the home with the homeowner, give the homeowner a copy of the Homeowner's Manual, and brief the homeowner about maintaining the home.

INSTALLATION INSPECTION CHECKLIST

TO ENSURE PROPER HOME INSTALLATION AND HOMEOWNER SATISFACTION, THE FOLLOWING ITEMS SHOULD BE CHECKED DURING OR PROMPTLY AFTER THE INSTALLATION AND BEFORE THE HOMEOWNER TAKES POSSESSION:

INSTALLATION/PLACEMENT:

- ❑ Alignment/Close-Off DW
- ❑ Level
- ❑ Foundation
- ❑ Tie-Downs

UTILITY CONNECTIONS

- ❑ Fuel
- ❑ Water
- ❑ Electric
- ❑ Sewage
- ❑ Cross-Over Duct

EXTERIOR

- ❑ Doors
- ❑ Windows
- ❑ Roof
- ❑ Siding/Trim

INTERIOR

- ❑ Ceiling
- ❑ Trim
- ❑ Electrical Systems/Fixtures
- ❑ Cabinets
- ❑ Furniture
- ❑ Keys
- ❑ All Warranties
- ❑ Paneling
- ❑ Floor Covering/Drapes
- ❑ Doors
- ❑ Plumbing
- ❑ Appliances
- ❑ All Manuals

15 MONTH FULL WARRANTY

Not PARTIAL

Not LIMITED

SKYLINE®

BRINGING AMERICA HOME. BRINGING AMERICA FUN.

SKYLINE®

BRINGING AMERICA HOME. BRINGING AMERICA FUN.

Corporate Office — P.O. Box 743 — Elkhart, Indiana 46515

Visit us at our web site at www.skylinecorp.com

07/14/06