11/10/92

SECTIONAL HOME INSTALLATION MANUAL

Friendship

FRIENDSHIP INDUSTRIES, INC.
P.O. BOX 110
NAPPANEE, INDIANA 46550

TABLE OF CONTENTS

TABLE OF CONTENTS.....PAGE i

DETAIL INDEX (FIGS.).....PAGE ii

INTRODUCTION.....PAGE 1

SITE PREPARATION.....PAGE 1 & 2

PIER CONSTRUCTION AND PLACEMENT.....PAGE 2

POSITIONING AND BLOCKING.....PAGE 3

FIGS. 1, 2, 3 & 4.....PAGE 4

FIGS. 5 & 6.....PAGE 5

UNIT CONNECTION.....PAGE 6

FIGS. 7, 8, 9, 10, & 11.....PAGE 7

FIGS. 12, 13, 14, 15, 16, 17, & 18.....PAGE 8

EXTERIOR CLOSURE.....PAGE 9

INTERIOR CLOSURE.....PAGE 9

TIE-DOWN AND ANCHORING.....PAGE 10

A-FRAME AND AXLE REMOVAL.....PAGE 10

FIGS. 19, 20, 21, 22, 23, & 24.....PAGE 11

UTILITY CONNECTIONS.....PAGE 12, 13, & 15

FIGS. 25, 26, 27, 28, 29 & 30.....PAGE 14

FIGS. 31, 32, & 33.....PAGE 16

FINAL INSPECTION.....PAGE 16

INSTALLER'S NOTES.....PAGE 17

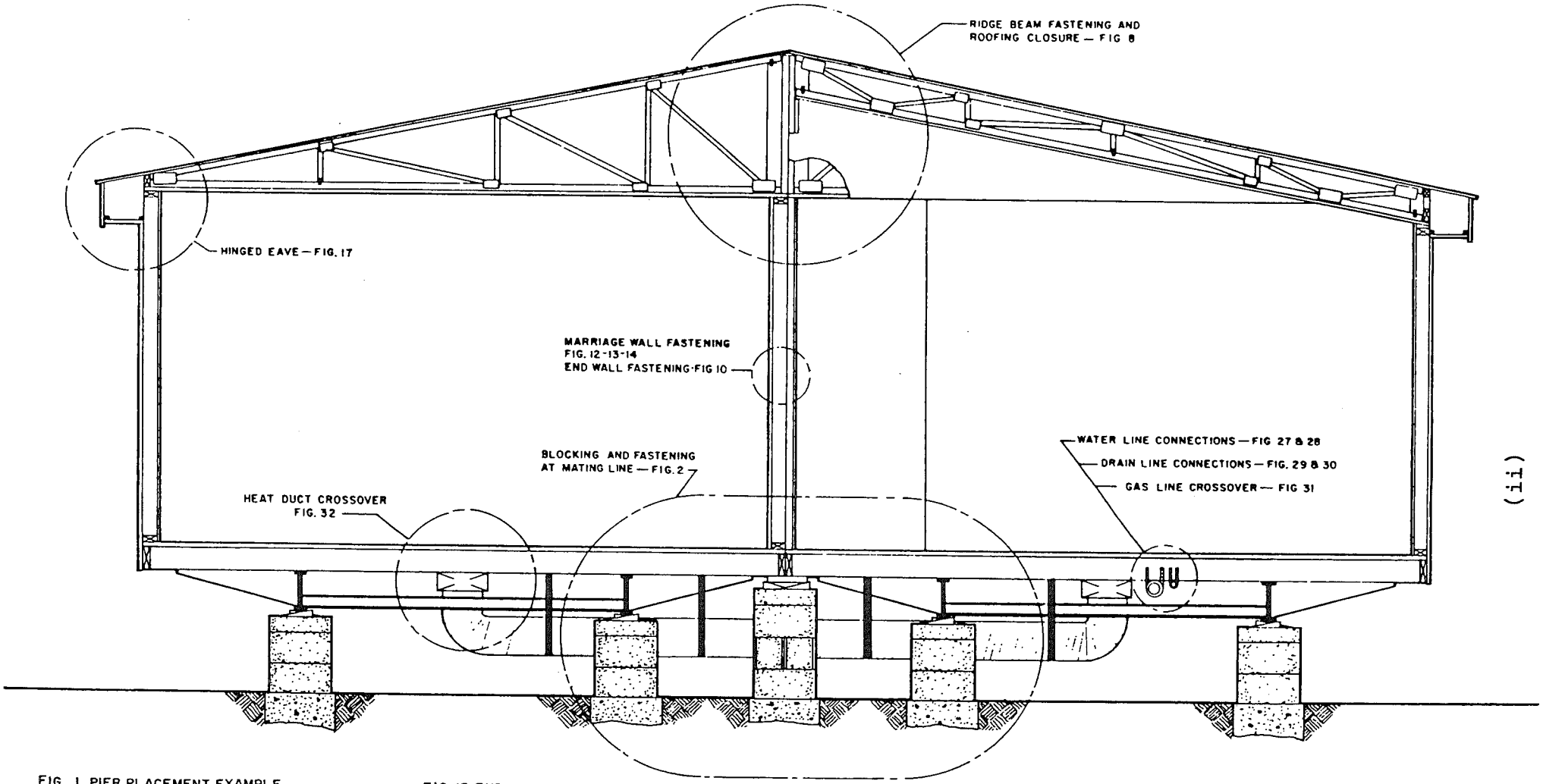

FIG. 1 PIER PLACEMENT EXAMPLE
2 BLOCKING & FASTENING AT MATING LINE
3 JACK WITH STEEL PLATE
4 JACKING POINTS AT AXLES
5 DOLLIE DEVICE AT HITCH
6 DOLLIE SETTING SYSTEM
7 JACKING POINTS TO ALIGN RIDGE BEAM
8 FASTENING AND CLOSURE AT RIDGE BEAM
9 CEILING JACK POST
10 END WALL FASTENING
11 2x6 COLUMN SUPPORT
12 INTERIOR WALL FASTENING
13 INTERIOR WALL FASTENING
14 INTERIOR WALL FASTENING

FIG. 15 END WALL ELECTRICAL CROSSOVER
16 MATING WALL ELECT. CROSSOVER
17 HINGED EAVE
18 INTERIOR MOULDING ILLUSTRATION
19 ZONE I TIE-DOWN
20 ZONE II TIE-DOWN
21 TIE DOWN CABLE DETAIL
22 REMOVABLE HITCH
23 AXLE-SPRING ASSEMBLY REMOVAL
24 FEEDER RACEWAY AND CONDUCTOR SIZES
25 30 AMP CROSSOVER
26 PORCH LIGHTS
27 WATER CONNECTION
28 WATER LINE CROSSOVER

FIG. 29 DRAIN CONNECTION
30 DRAIN LINE CROSSOVER
31 GAS LINE CROSSOVER
32 HEAT DUCT CROSSOVER
33 ROUND TOP ASSEMBLY
34 FIREPLACE COMBUSTION AIR SUPPLY

INTRODUCTION

The Federal Mobile Home Construction and Safety Standards set forth comprehensive requirements for design, construction, fire safety, plumbing, heating systems and electrical systems for sectional homes designed specifically for use as dwellings. This manufactured home was engineered, constructed and third party inspected for conformance to this national standard.
The following information is presented to assist qualified personnel in setting up this home. It is extremely important that it be properly set, blocked and leveled by a knowledgeable and experienced sectional home mover, dealer or installer.

Applicable local or state laws may have more stringent or greater requirements than outlined in this manual and must be complied with to obtain or regain the right to occupancy. Therefore, we recommend consultation with local regulatory agencies for codes which may require licenses and/or permits.
Equipment not installed by the manufacturer or set up crew must be installed by qualified personnel following the instructions supplied with the equipment. The home manufacturer cannot accept any responsibility for damage caused by improperly installed equipment.

For additional information, refer to the Home Owner's Manual.

SITE PREPARATION

The sectional home lot or site shall be graded to prevent water accumulation under the home and sloped to provide storm drainage runoff. That portion of the site intended for placement of the home shall be undisturbed soil or compacted fill. If the site is on filled soil, it must be compacted to at least 90% of it's maximum relative density. In areas subjected to freezing and thawing, it is always recommended to consult the local building officials to locate the frost line depth. It is important that the pier footings be located below the frost line and designed in compliance with local building code requirements. If this is not accomplished and upward heaving from frost occurs, the home can become unlevel and actually damaged. The piers are forced upward while the main frame members are secured by steel cables that resist the movement.

The foundation should be preferably a solid concrete slab, pad or wide concrete ribbons. In the abscence of a concrete slab or pad, it is recommended to place a layer of polyethylene plastic sheeting or roofing felt on the ground under the home to form a vapor barrier. It is also recommended that the home be properly skirted and that the skirting be properly vented to provide air circulation under the home.

NOTICE

IMPROPERLY VENTED SKIRTING WILL CAUSE MOISTURE TO ACCUMULATE BENEATH THE HOME. WHEN SKIRTING THE BOTTOM OF THE HOME, INSTALL AT LEAST 4 VENTS WITH A NET FREE AREA OF 150 SQUARE INCHES EACH, TWO ON EACH SIDE. THIS WILL ALLOW CROSS-VENTILATION AND DISSAPATE DAMAGING CONDENSATION

PIER CONSTRUCTION AND PLACEMENT

In accordance with the design loads specified in the Federal Mobile Home Construction and Safety Act for the regions indicated on the weather zone structural map, required pier construction and spacing is based on the following design criteria:

1. Allowable soil bearing pressure of 1,500 psf.
2. Minimum strength of precast concrete footing of 2,000 psf.
3. Maximum roof live load of 30 psf., or 40 psf..
4. Maximum floor live load of 40 psf..

Maximum spacing of piers is 8' center to center. Where local soil bearing pressure of 1,500 psf is not achieved, reduce the minimum spacing accordingly. In no case should the maximum of 8' o.c. be exceeded. Refer to the recommended blocking diagram supplied by the manufacturer for specific pier locations. (see fig. 1)

The recommended height above grade for a single pier supporting the main I beam is 20". Piers located at the centerline of the front and rear walls and along the marriage walls are 30" high. These piers must be double tiered with blocks interlocked and capped with 16"x16"x4" solid concrete blocks. Unless they are designed by a registered, professional engineer or architect, piers should never exceed 36" in height. See fig. 2 for details.

NOTICE

-PIERS SUPPORTING MAIN I BEAMS MUST BE SIZED TO SUPPORT A 5,000 LB. LOAD.

-PIERS ON CENTERLINE MUST BE SIZED TO SUPPORT A 10,000 LB.LOAD (30 PSF)
14,000 LB.LOAD (40 PSF)

If manufactured loadbearing supports or devices are used, they shall be listed and labeled by an approved testing agency.

POSITIONING AND BLOCKING

I The "A" unit, or wet side, will be the first side to be blocked and should be set in its desired location. After making sure that all service connections on the site align with the service connections on the home, follow the steps listed below for blocking.

BEFORE JACKING

1. Use jacks with a minimum rating of 12 tons.
2. Use a steel plate between the jack and steel I beam to distribute the concentrated loads. See fig. 3.
3. Use firm support under the jack bases to prevent them from tipping or settling.
4. Always follow the sequence of jacking outlined on the following pages to avoid overstressing and possibly damaging structural members.

STEP 1 "Rough" level the home A-unit using the hitch jack. Place adequate blocking under the A-frame to prevent the home from falling should the jack fail.

2 On one side of the unit, place a jack just forward of the front spring shackle and another just behind the rear spring shackle. On that side,raise the unit by operating the jacks simultaneously. Place concrete block piers under the main I beams as shown in fig. 4. Remember, the pier spacing is not to exceed 8'-0" o.c..

3 Jack the main I beam at the front and position a pier within 1'-0" of the end of the unit. Repeat this step at the rear.

4 To level the other side, repeat steps 2 and 3. After completing these steps, the unit should be approximately level from front to rear and side to side.

5 Place the remaining piers under the I beams at the locations specified on the blocking diagram supplied by the manufacturer.

6 Level the unit using a 6 foot carpenter's level or similar equipment. The final height adjustment is made by jacking the I beam and inserting hardwood shims between the beam and piers. This final adjustment is essential for the proper operation of the doors, windows and drainage system and for overall appearances.

II Having set, blocked and leveled the A unit, install a 4" to 6" strip of insulation on the mating end walls, floor line and header line. This will prevent air infiltration after both units are set and tied together. Remove shipping material (plastic and batten strips) from both units and check for obstructions that would prevent them from properly joining. Do not remove the transit walls until they are connected together.

1. Position the "B" unit approximately 8" to 12" from the A unit being sure that the floor ends are even. A multi-directional dollie type setting system is recommended for the final positioning of this half. These dollies are constructed so that hydraulic jacks can be positioned on roller-tracks under the frame members. This allows the unit to easily roll sideways or front to rear, minimizing any possibility of warranty-voiding frame damage. See fig. 5 and fig. 6.

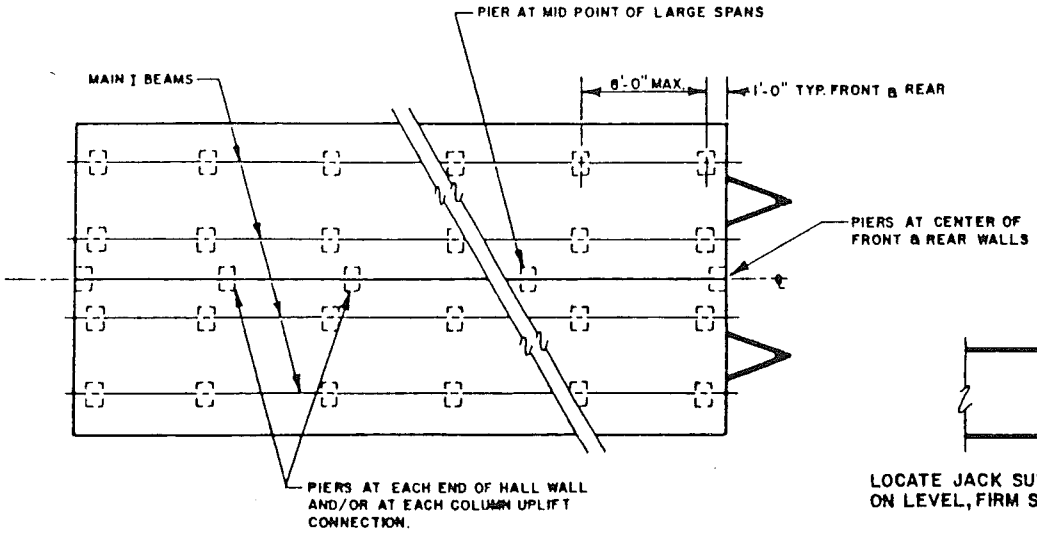

FIG. 1

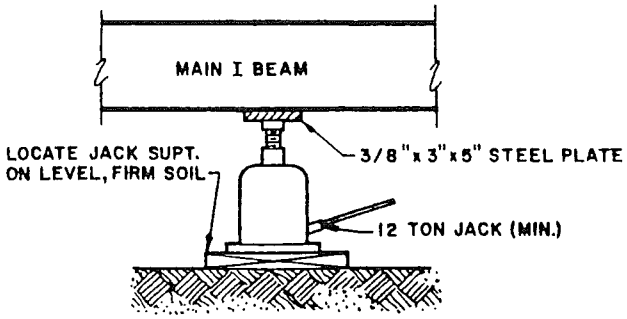

FIG. 3

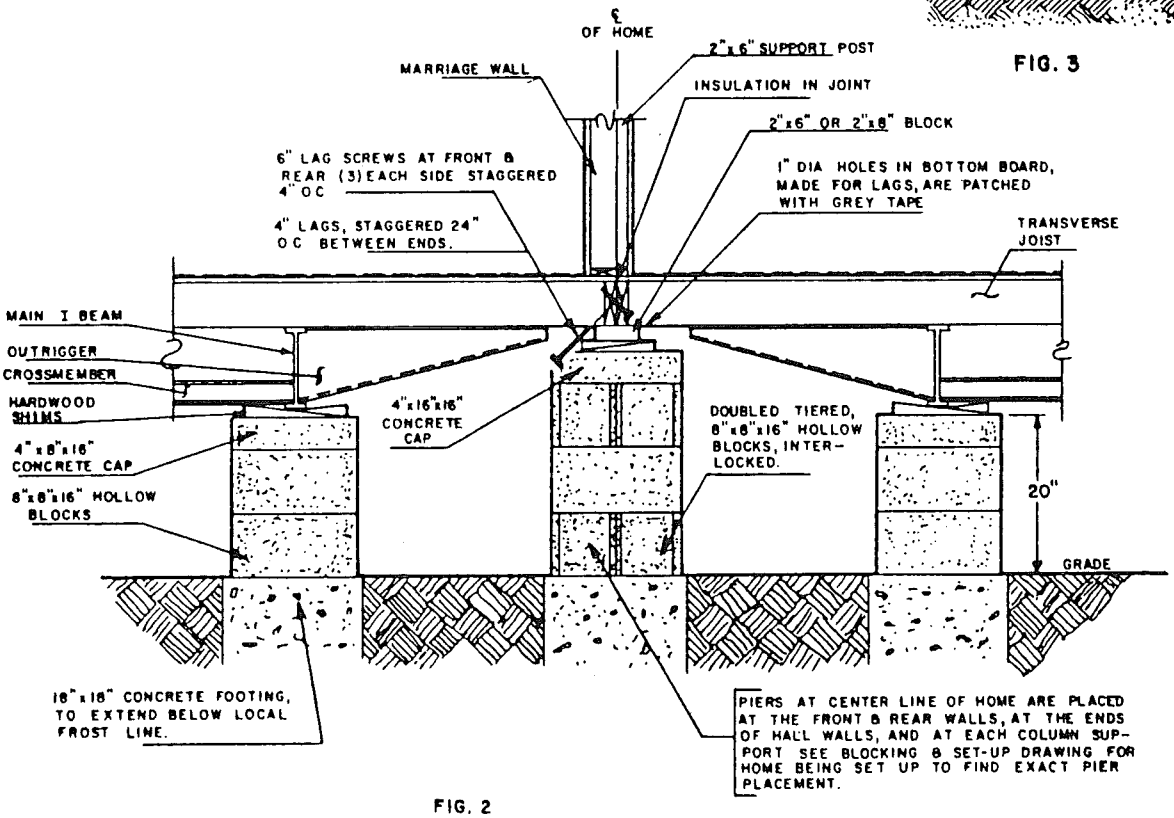

FIG. 2

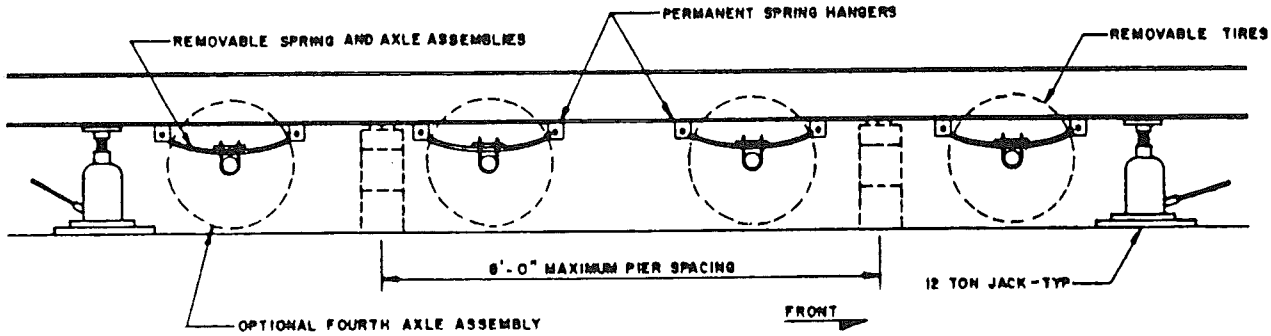

FIG. 4

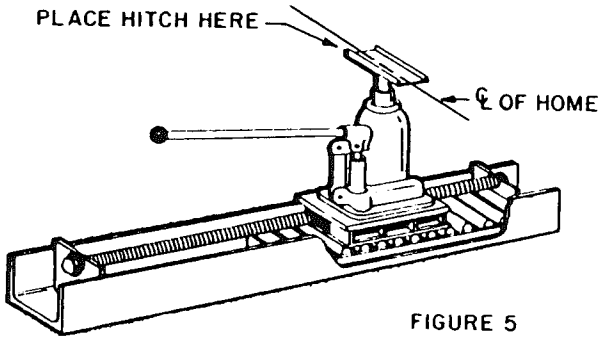

FIGURE 5

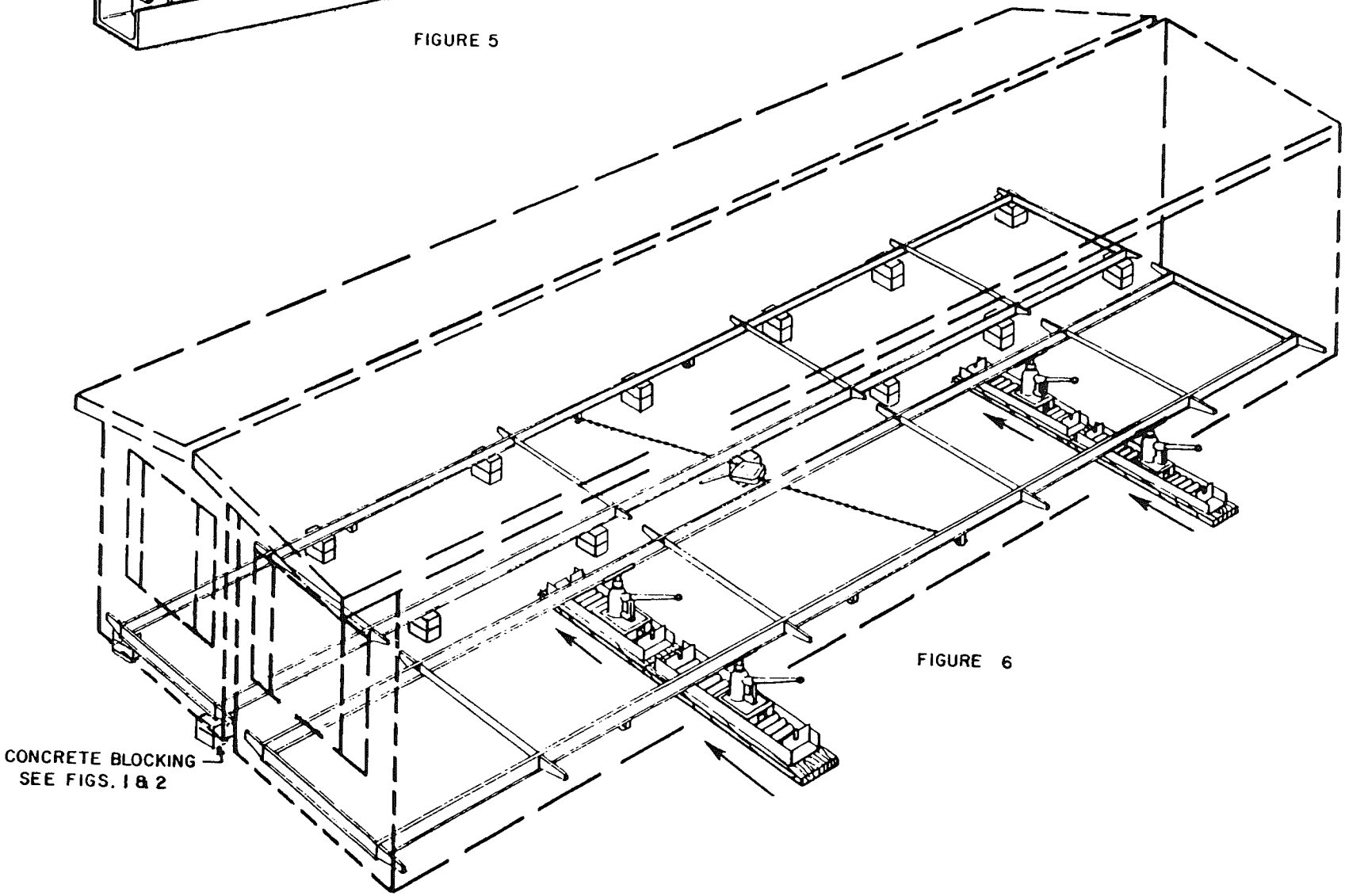

FIGURE 6

2. Raise the B unit by jacking all jacks simultaneously until the floor lines are approximately level from B unit to A unit. If the wheels are not clear of the ground, they may be deflated.
3. Make all crossover connections between halves (electrical, water lines) that are in the floor or mating walls as described in fig. 16 and 28.
4. Inspect the header line, floor line, and mating end walls to be certain that all insulation strips are in place before pulling the two units together.
5. Using one or more hand winches attached at the spring hangers, pull the two units tightly together while watching the crossover lines to avoid kinking or pinching them.
6. Block and rough level the B unit as described before for the A unit.

UNIT CONNECTION

Before lag screwing the units together, check to be sure that the floors are level at the mating line perimeter joists. This can be accomplished by adjusting the hardwood shims placed between the I beams and piers. See fig. 2.

1. Lag the mating line perimeter joists with 4" lag screws toe-nailed and staggered 4' o.c. between each end. At each end are three 6" lag screws spaced 4" o.c. (see fig. 2). Be sure that the strip of insulation is in place between the joists.
2. The ceiling panels and end walls on each half must align with each other inside the home. If they are not, they may be by raising the opposite corner on that half as shown in fig. 7. This will move the ceiling forward and into position. When this is accomplished, lag each end of the ridge beam with three 4" lag screws 3" o.c. as shown in fig. 8.
3. Remove all tempory transit walls.
4. Carefully inspect the ceiling line at the marriage line for low points. To raise these points, use a hydraulic jack with a post as shown in fig. 9. Raise the jack until the two ceiling halves are flush. Now, complete fastening the ridge beam with 3 1/2" lags staggered 24" o.c. between the ends. Repeat the proceedure at all low points.
5. Secure the end walls with #8x3" screws (see fig. 10). Again, be sure that the insulation strip is in place.
6. Because certain floor plans do not have loadbearing walls or partitions installed at certain critical structural areas, it is necessary to install a 2"x6" ridge beam column support along the marriage line. Its location will be clearly labeled along the floor line. See fig. 11. The ridge beam must be properly aligned and completely fastened together before installing the ridge beam column support.
7. Refer to figs. 12, 13 & 14 for instructions on fastening interior marriage walls.

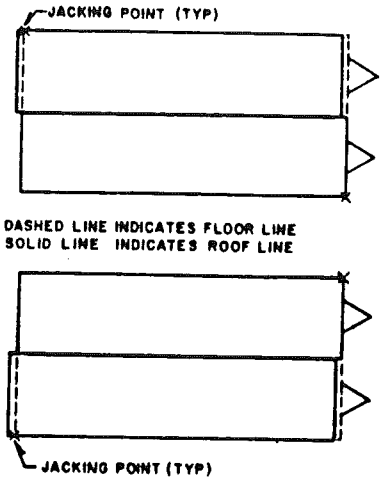

FIG. 7

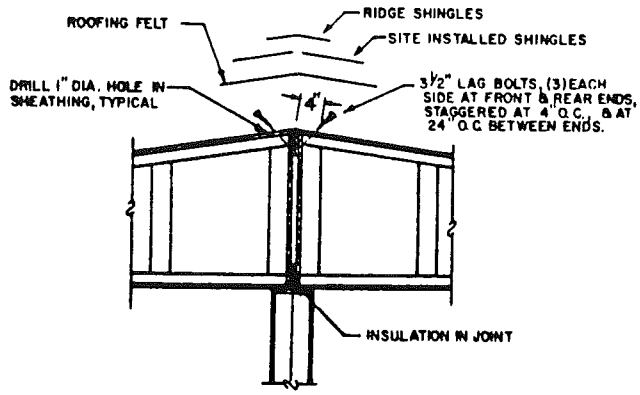

FIG. 8

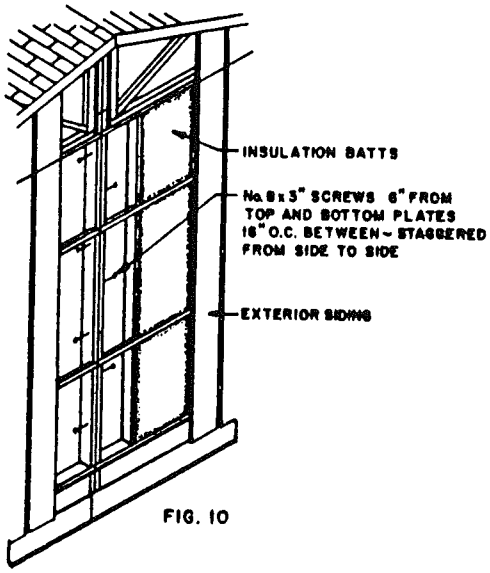

FIG. 10

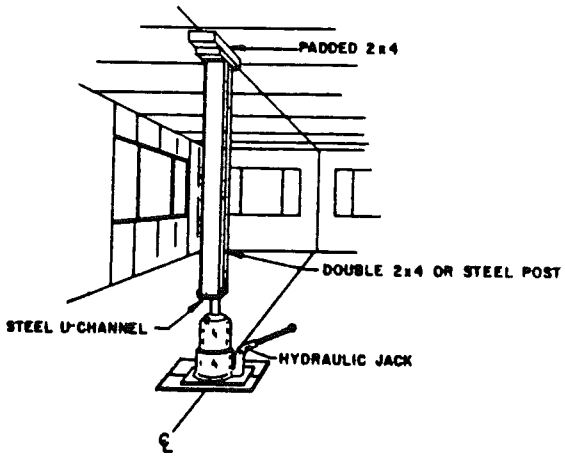

FIG. 9

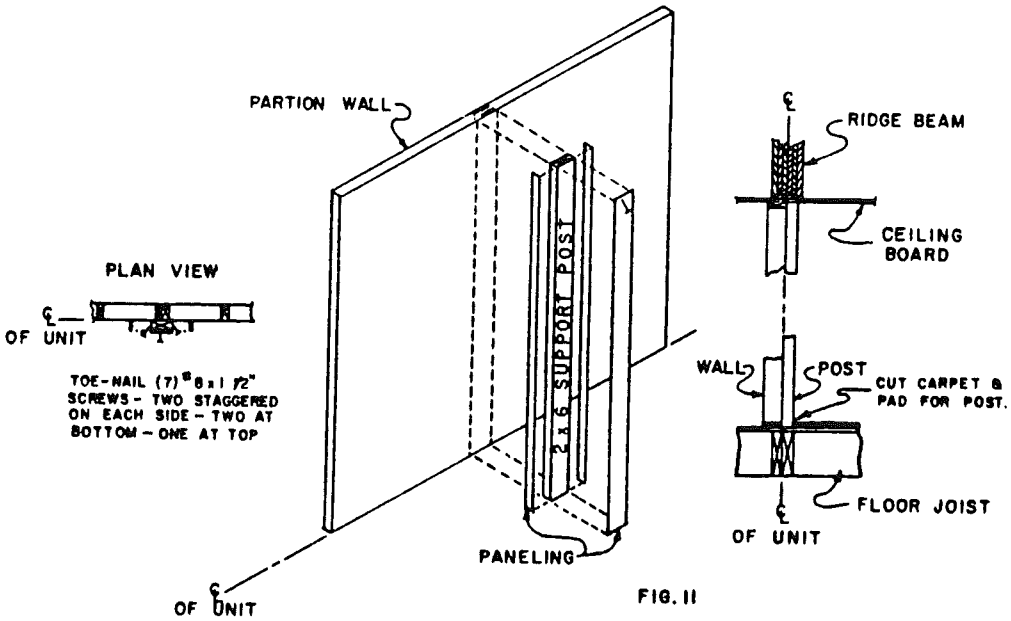

FIG. 11

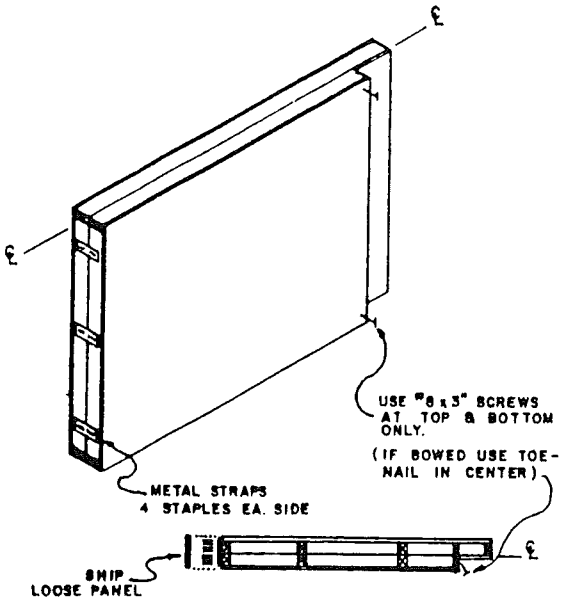

FIG. 12

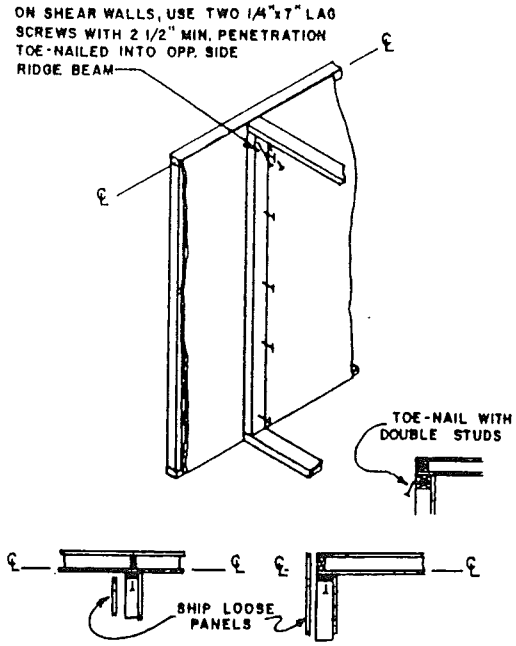

FIG. 13

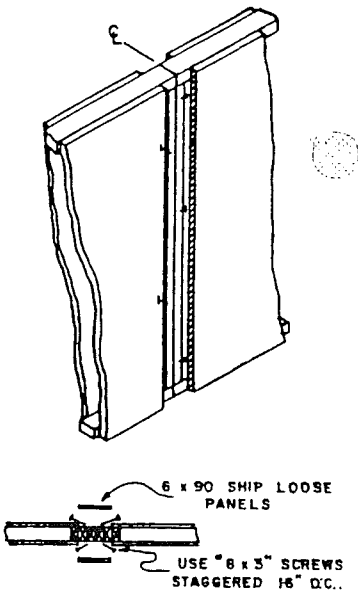

FIG. 14

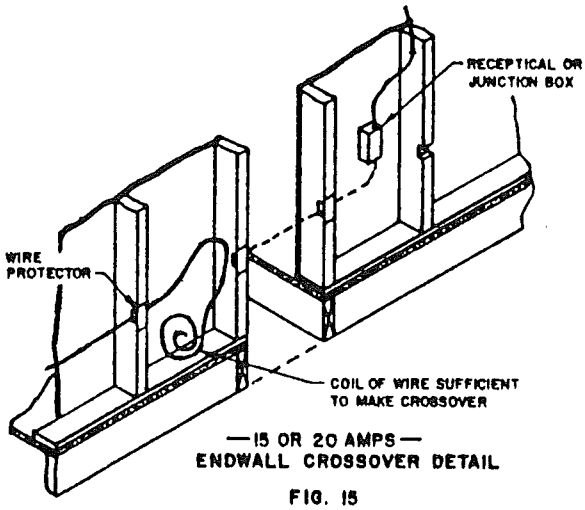

—15 OR 20 AMPS—
ENDWALL CROSSOVER DETAIL

FIG. 15

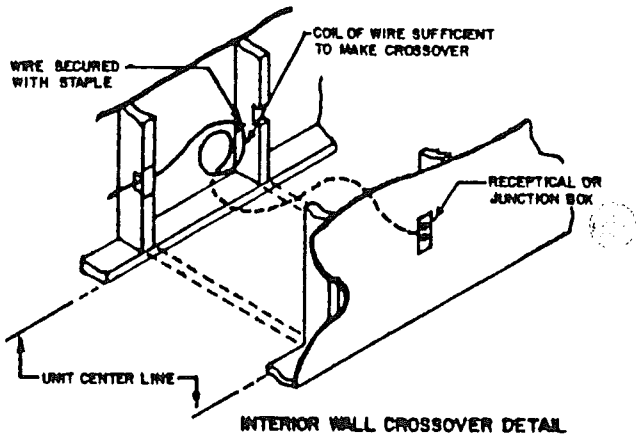

INTERIOR WALL CROSSOVER DETAIL

FIG. 16

HINGED EAVE

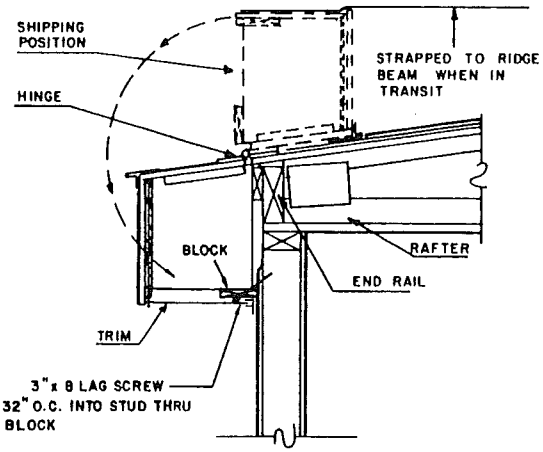

FIG. 17

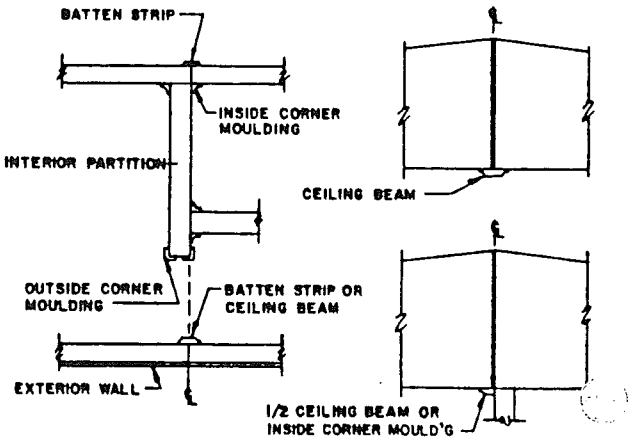

FIG. 18

EXTERIOR CLOSURE

To maintain the integrity of the exterior envelope of the home for energy-saving and vermin proofing reasons, it is very important that all holes in the bottom board, roof underlayment and siding be properly patched or caulked.

1. A special material bottom board has been factory installed to protect against moisture, unconditioned air and various other vermin. This bottom board could have been damaged during transit or intentionally cut to provide for lag screw, electrical and water line crossover installation. Use a patch of the same material with a bead of adhesive around the perimeter. Overlay it on the hole and fasten it in position with an outward flare tacker. Space the staples not more than 6" o.c. around the perimeter of the patch and a second row approximating the edge of the hole. Finally, tape the edge of the patch with duct tape to ensure weather-resistance.
2. Before installing end wall closure materials, make all electrical crossovers as shown in figs. 15 and 16. Insert fiberglas batts in any open stud cavities. Close the front and rear walls with the provided materials using the existing siding as a guide. On units that have a bottom starter, it should be installed before the vertical siding. On units with wood or hardboard siding, all seams shall be sealed and/or caulked. See fig. 10.
3. Units manufactured with hinged eaves will be delivered with the eaves in a shipping position. To lower, remove all plastic wrapping and galvanized straps and swing them down into position as shown in fig. 17. Secure with lag screws as indicated.
4. Shingled roofs should be closed by the following proceedure:
   a. Lay the 2 starter rows of shingles over the hinged eaves.
   b. Cover the ridge beam with a wide strip of underlayment and staple it to the decking with 1"x1"x16ga. staples spaced 6" o.c.. This will cover the holes made in the decking for lag screw installation at the ridge beam.
   c. Lay the remaining rows of shingles as necessary.
   d. Shingles used for the ridge cap are sections cut from 36"x12" shingles. Start from the end away from prevailing winds and overlap each shingle 7" working toward the opposite end.
5. Install exterior trim, mouldings, etc. as required.

INTERIOR CLOSURE

All materials necessary to trim out the interior of the home are shipped loose with the home. Refer to fig. 18 for illustrations of the typical moulding installations.

TIE-DOWN AND ANCHORING

All sectional homes should be securely anchored to resist the overturning and lifting effect of high winds. Be certain that the home is level before proceeding since jacking an anchored home may cause structural damage. This manufactured home was designed for the wind conditions specified on the data plate located at the electrical panel. Homes designed for Zone I are equiped with tie-down attachment provisions as shown in fig. 19 and fig. 20 for Zone II. Since it is important to use materials of proper design and quality, the following specifications should be considered minimum requirements.

1. Steel cable with a breaking strength of 4,750 pounds such as galvanized aircraft cable 1/4" in diameter.
2. Galvanized connection devices such as turnbuckles, I bolts and cable clamps rated at 4,750 pounds.
3. Ground anchors must be capable of withstanding a 4,750 pound pull and installed to the manufacturer's specifications.

The proceedure for tying the home down is as follows:

1. Position and install the ground anchors so that the final strap angles are within the limits shown in figs. 19, 20 and 21.
2. Connect the cables to the frame and ground anchors as shown in fig. 21.
3. Tighten the cables using the turnbuckles.

CAUTION

OVERTENSIONING THE CABLES MAY PULL THE HOME OFF THE PIERS

Tighten all cables only enough to remove the slack. Tension the cables after all cables have been installed and the slack removed.

4. The cable tension should be rechecked at frequent intervals until all pier settlement has stopped. Remember, during any releveling process DO NOT jack against tight cables.

Zone II homes are equipped with tie-down attachments on the main I beam in the same manner as Zone I. See fig. 20 for the spacing of ground anchors and tie-downs.

Anchoring equipment exposed to weathering shall have a resistance to corrosion at least equivalent to that provided by a coating of zinc on steel of not less than 0.30 ounces per square foot of surface coated. Should the frame require any touch-up painting, use a zinc chromate, asphaltic or other corrosion resistant base paints of equivalent protection.

A-FRAME/AXLE REMOVAL

Because some localities require the removal of the hitch A-frame and/or axle assemblies, this home is equipped with both that can be easily and simply removed. (removable hitch is optional) Refer to fig. 22 for hitch A-frame removal and fig. 23 for axle assembly removal.

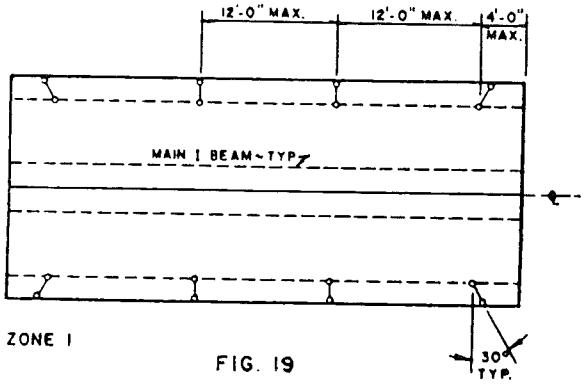

ZONE 1

FIG. 19

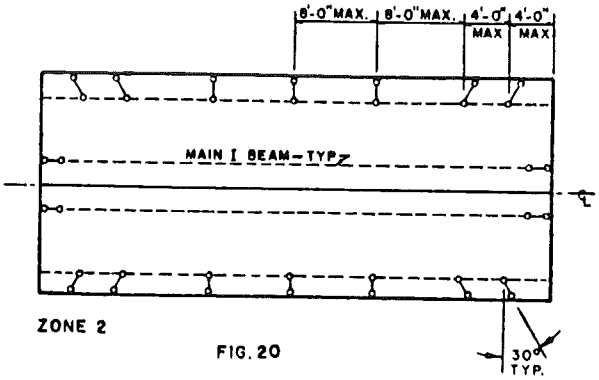

ZONE 2

FIG. 20

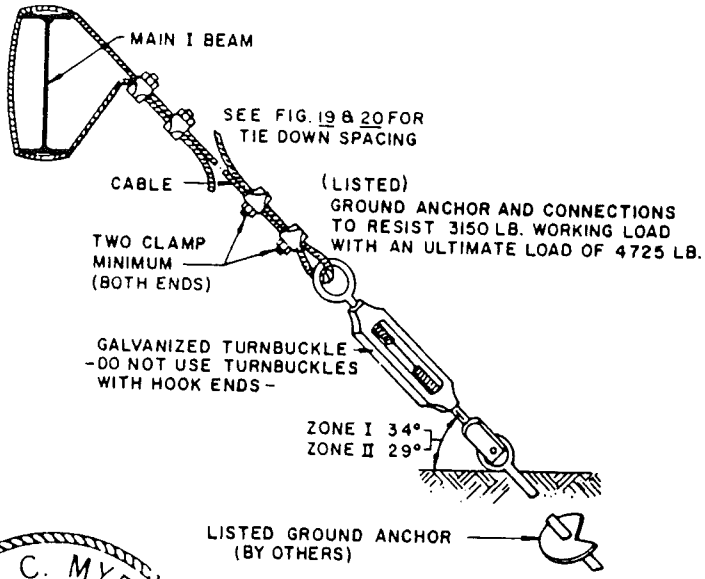

FIG. 21

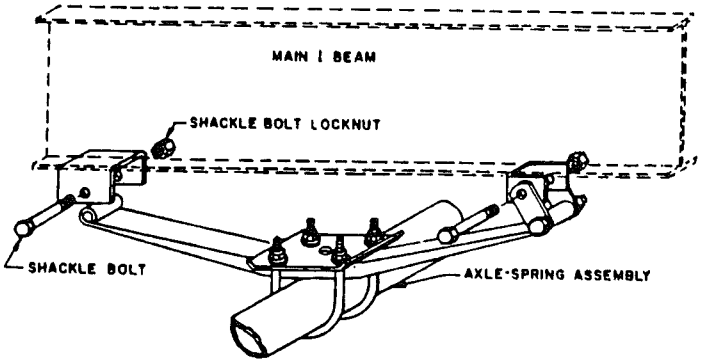

FIG. 23

NED C. MYERS
REGISTERED
No. 14617
STATE OF
INDIANA
PROFESSIONAL ENGINEER

Ned C. Myers
3/17/81

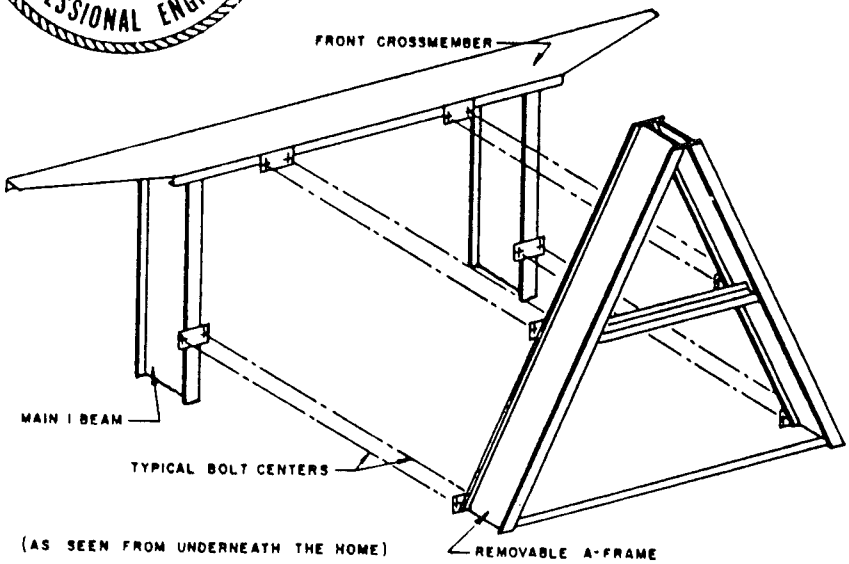

FIG. 22

NOTE: ALL WIRES FROM THE PANEL BOX TO THE DISCONNECT MUST BE INSULATED, INCLUDING THE GROUND WIRE. ALL WIRES WILL BE COPPER

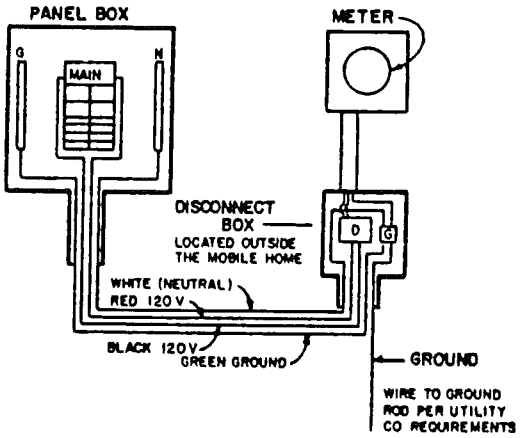

FEEDER CONDUCTOR SIZE NEEDED TO CONNECT THIS MFG'D HOME TO THE DISCONNECT

100 AMP SERVICE	3 EA AWG No 3 FEEDERS 1 EA AWG No 8 GROUND	75°C THW INSULATION
200 AMP SERVICE	3 EA AWG No 3/0 FEEDERS 1 EA AWG No 4 GROUND	75°C THW INSULATION

FIG. 24

UTILITY CONNECTIONS

Before connecting any utility systems, please consult the local, county and state authorities. Many localities have special requirements pertaining to the installation and testing of utility systems.

NOTE: IT MUST BE POSSIBLE TO GAIN ACCESS TO ALL UTILITY HOOK-UPS BY REMOVING SECTIONS OF SKIRTING OR THROUGH ACCESS DOORS.

Qualified quality assurance personnel have tested all utility systems at the manufacturing facility. However, damage to these systems could have occurred during transit which would necessitate conducting field tests after service connections are made. Only qualified service personnel familiar with local code regulations should make all utility connections and conduct field tests. Do not energize the electrical system until the units have been set and all electrical connections have been made.

ELECTRICAL SYSTEM

A. The electrical supply connection to the manufactured home is made by a permanent feeder routed to the distribution panel through the factory installed feeder raceway beneath the home. In making the connection, it is extremely important that the wire be properly sized. If wire is incorrectly sized, the ampacity for that wire may be exceeded and a voltage drop would occur. This would cause a drop in efficiency of all lights and appliances, motors would burn out and the consumer would be paying for much more electricity than actually used. See fig. 24 for proper wire sizing and connection details.
   The following tests should be made after the connection has been made using approved test equipment.
   1. Continuity test of circuit conductors
   2. Polarity test
   3. Continuity test of electrical grounding system

B. Electrical crossovers (15 and 20 amp) between halves of the manufactured homes are located along the center line between the sections. The exact location can distinguished by junction boxes, double recept boxes or AMP connectors. Connect the enclosed wires as illustrated in fig. 15 for end wall applications and as in fig. 16 for interior applications.
   NOTE: INTERIOR WALL CROSSOVERS MUST BE MADE BEFORE THE HALVES ARE JOINED.
   For circuits of 30 amps or more, a below-floor crossover is installed between water proof pull boxes located on each half. See fig. 25.

C. Exterior lights for the front and utility doors are shipped loose inside the home. Remove the junction box covers and install as shown in fig. 26.

D. When a home is set in a location that experiences sub-freezing temperatures, all exposed water piping should be protected by electrical heating tape. Any heat tape used must be approved for manufactured home use by a nationally recognized testing agency and installed according to the manufacturer's instructions.

WATER DISTRIBUTION SYSTEM

A. The water distribution system has been designed for an inlet water pressure of 80 psi. In areas where the pressure exceeds this, a pressure reducing valve should be installed to avoid damaging the system. Beneath the home is a single 3/4" inlet to which the water connection is made. A full-flow master shut off valve with threaded or soldered joints should be installed adjacent to the home. See fig. 27.

B. After removing the aerators or screens from all the faucets, open them and run the water for approximately 15 minutes. This should remove any particles left in the lines that might cause an unpleasant taste or become lodged at faucet washers and cause leaks.
NOTE: DO NOT FLUSH WATER LINES UNTIL THE DRAIN SYSTEM IS CONNECTED.

C. Some floor plans require a water line crossover somewhere along the centerline between sections. If freezing conditions exist, wrap the water lines at the connector with insulation and connect as illustrated in fig. 28.

DRAINAGE SYSTEM

Final drain connections are made at the main outlet located in the rear portion of the home. When connecting this outlet to the main sewer system, approved connectors should be used at both ends. The drain lines installed on the home must have a slope of 1/4" per foot and be supported at intervals not to exceed 4' o.c.. See fig. 29.
After the system has been connected, water should be allowed to flow into all fixtures (including the clothes washer standpipe) for at least three minutes. Check for visible leaks in all joints.
Wherever it is necessary to install a drain line from one section to the other, only approved couplers should be used to make the connection as shown in fig. 30.

In homes with multiple bathrooms (1½ or 2), all drain lines must be brought to a single drainage point as follows:

1. Remove the caps on the drain outlets and connect the supplied parts together without using glue.
2. Check to be sure that the assembly has the proper slope (1/4" per ft.).
3. Start at the outlet end of the sytem and remove, cement and replace each part of the assembly one at a time.
4. Using 3/4"x.020 strapping, strap the drain line to the floor joists. Use 8d coated sinkers to secure the strapping at 4' intervals.
5. Connect the home drain to the site sewage as in the single bath connection.
6. Check the completed system for leaks before connecting by capping the outlet and filling the entire drain line with water for 15 min..

GAS PIPING SYSTEM

The gas piping system was designed for a water column range of 7" to 10 1/2" for natural gas and 11" to 14" for LP gas. The gas supply pressure must be within this range for safe and efficient operation of gas appliances. In some localities, utility companies and/or building inspectors require special tests before the gas supply line may be connected to the home supply system. After final testing of the home gas supply lines, the home can be connected by using a listed gas

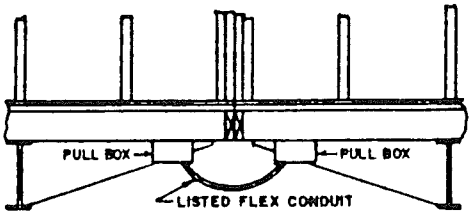

—30 AMPS OR MORE—
BELOW FLOOR CROSSOVER DETAIL

FIG. 25

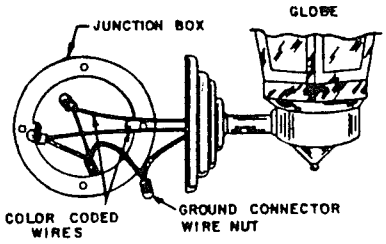

AN EXTERIOR FIXTURE

FIG. 26

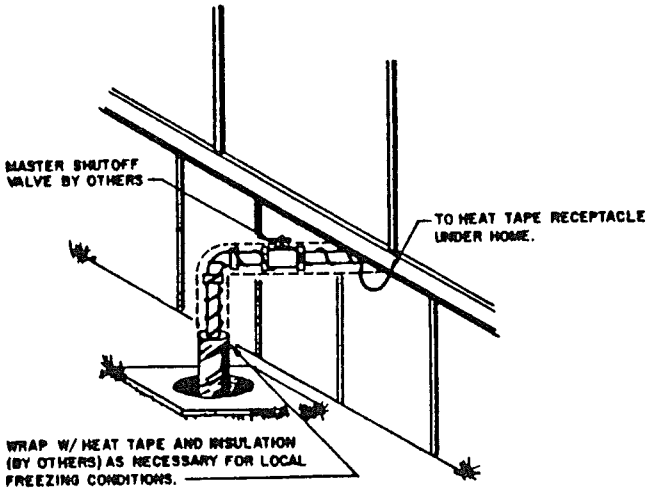

FIG. 27

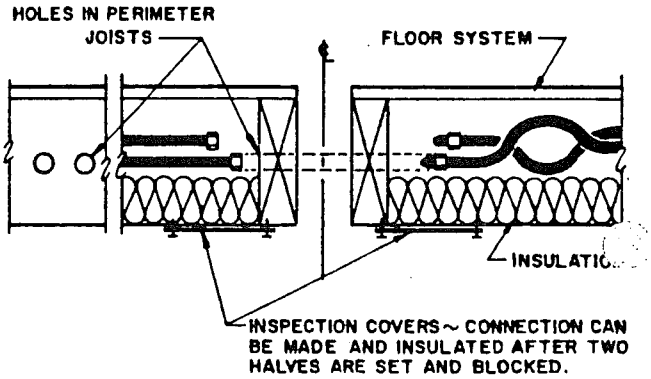

FIG. 28

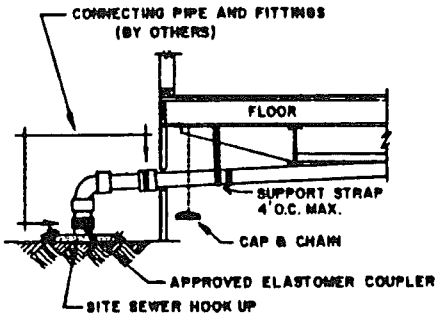

FIG. 29

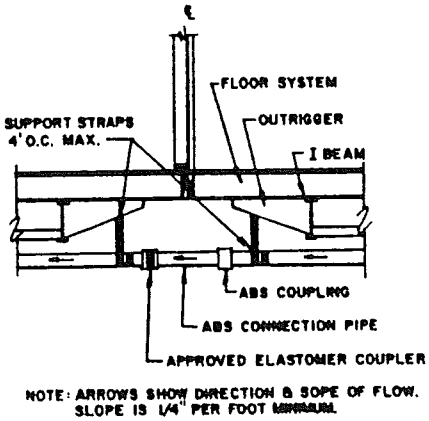

NOTE: ARROWS SHOW DIRECTION & SOPE OF FLOW. SLOPE IS 1/4" PER FOOT MINIMUM

FIG. 30

connector of the capacity indicated on the label adjacent to the gas inlet.
NOTE: A MAIN SHUT OFF VALVE AT THE UTILITY HOOK-UP MAY BE REQUIRED BY LOCAL CODES OR UTILITY COMPANIES AND IS ALWAYS RECOMMENDED.
On some homes which incorporate gas appliances in both halves, a gas line crossover shall be made with a quick disconnect device. This crossover will be located below the floor structure and at the centerline between sections. Remove the dust covers and snap on the crossover as illustrated in fig. 31.

HEATING SYSTEMS

On multi-sectional homes, the heat flow from one section to the other is provided by a crossover heat duct system. This is a 10" diameter flexible duct suspended under the floor and equipped with adjustable collars. These clamp to the sleeves projecting through the bottomboard under the internal furnace ducting. The flexible ducts should be suspended above the ground with strapping as shown in fig. 32.

If the home has a factory installed fire place, a "Round Top Assembly" shipped loose with the home must be installed on the building site. Follow all the installation instructions as supplied by the manufacturer. See fig. 33.

DRYER VENTING

If the home is equipped with a clothes dryer, it must be exhausted to the outside by a moisture-lint exhaust system. This system will be roughed in by the manufacturer if the dryer or receptacle is furnished by the home manufacturer. After the duct is installed, the openings in the wall or floor, both inside and out, must be caulked or sealed. If the home is not equipped with a dryer vent but an electric outlet is provided, an opening in the wall or floor is provided also. Installation of the exhaust system must be in accordance with the dryer manufacturer"s installation instructions.
NOTE: THE DRYER MAY NOT BE VENTED INTO THE SPACE UNDER THE HOME.

COMBUSTION AIR INLETS

Barometric dampers are installed on each side of the fireplace that automatically open and close. These 4" diameter, 36" long ducts are supplied to duct outside air to the fireplace and can take air from any direction; up, down, along side of or at rear (if the fireplace is on an outside wall).DO NOT TAKE AIR FROM THE ATTIC SPACE, ABOVE THE ROOF, OR ANY OTHER ROOM ESPECIALLY THE GARAGE. DO NOT TAKE AIR FROM AREAS WHERE OTHER FUEL BURNING APPLIANCES ARE INSTALLED. If the flexible duct is not long enough, it can be extended with any 4" diameter metal pipe to the length needed. Use duct tape on all joints to make them air tight and wrap with insulation to prevent condensation. Attach the ducts to the fireplace with the provided hose clamps. See fig. 34.

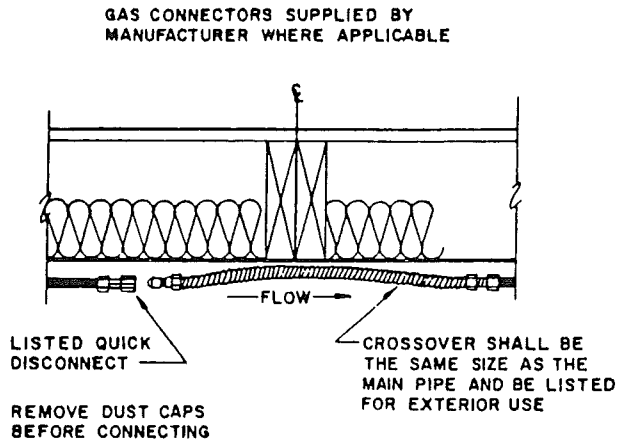

FIG. 31

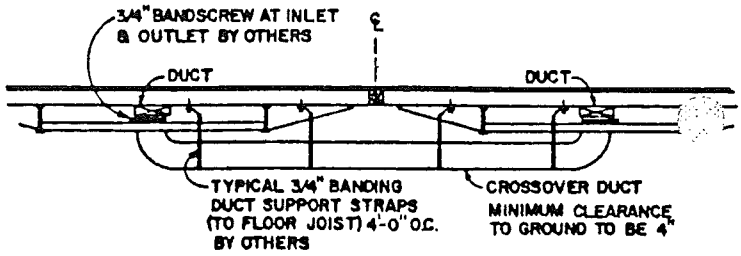

FIG. 32

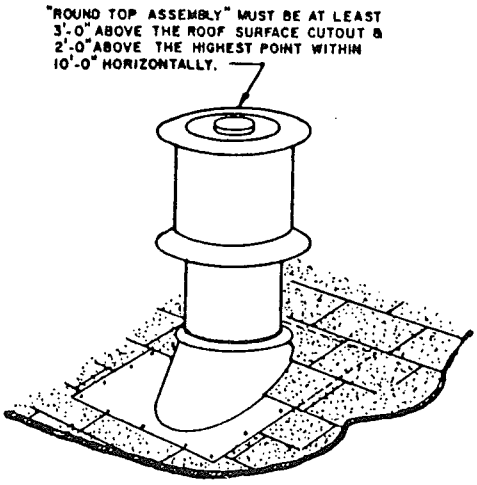

FIG. 33

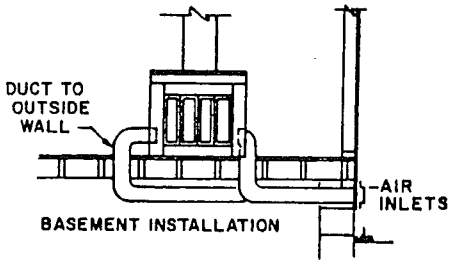

FIG. 34

FINAL INSPECTION

After the home has been completely set up, a final inspection should be made to insure that no items have been overlooked which could cause a service problem.

A. A thorough check should be made of all portions of the exterior siding to make certain that it is not cracked, split, buckled or loose in any manner. All siding found to be in one of these conditions should be repaired or replaced.

   All fasteners that are loose should be re-tightened or replaced.

   All decorative trim pieces or moulding strips, including drip rail or moulding along the edge of the roof, should have special attention to make certain that there are no gaps or voids in the sealant tapes or caulking material. Reseal any places found.

B. The roof should be checked to make certain that all stack heads, vent pipes or chimney flashings are in place, properly attached and properly sealed. The shingles should be checked for proper attachment, making certain that none are loose or have been displaced during transit.

C. If there are any low-hanging trees or bushes adjacent to the home which could damage the exterior of the roof, they should be trimmed or cut back accordingly. Their future growth should be considered in connection with their movement during windy conditions or under snow or ice loads.

INSTALLATION NOTES

'92 NOV 10 A10:22

DEPT. OF ADMIN.
BLDG. CODES & STDS