Champion Home Builders Co.
Manufactured Home
Setup and Installation Manual

'99 JAN 22 A8:56

1/22/99

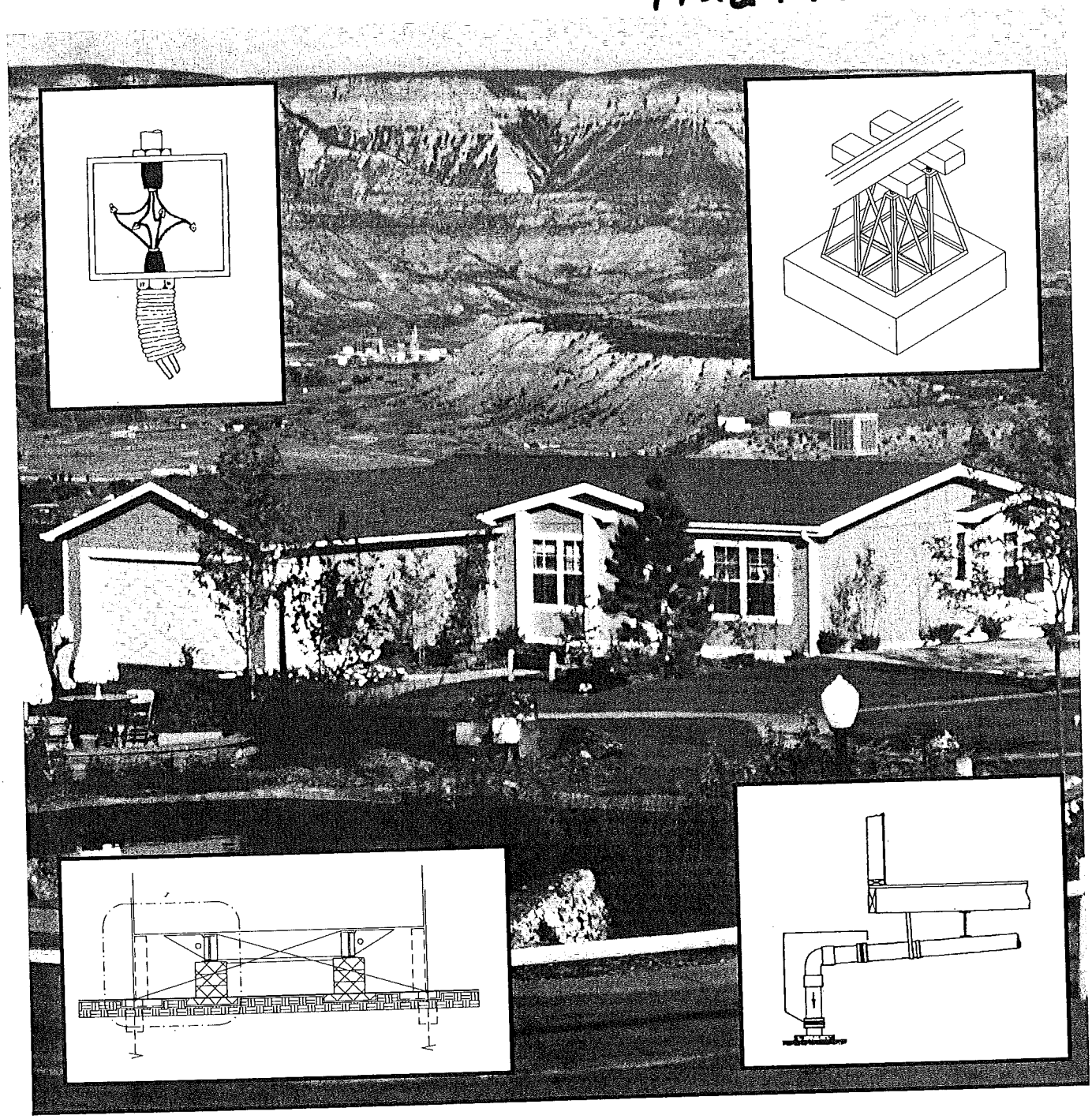

TABLE OF CONTENTS

Chapter 1 - Introduction 3
1.1 How to use this manual 3
1.2 Pre-installation considerations 3
1.3 Safety 3
1.4 Consumer information card 3
Chapter 2 - Definitions 4
Chapter 3 - Site Preparation 5
3.1 Location and Layout 5
3.2 Soil Conditions 5
3.3 Removal of organic material 5
3.4 Drainage 6
3.5 Ground moisture control 6
Chapter 4 - Foundations 10
4.1 Piers 10
4.2 Acceptable types of footings 11
4.3 Permanent Foundations 12
4.4. Special Considerations (See also Section 5.4.2) 12
4.5 Important reference documents 13
Chapter 5 - Setup Procedures 22
5.1 Moving home to location 22
5.2 Positioning home 23
5.3 Crossover connections for multisection homes. 25
5.4 Anchoring instructions 30
5.5 Installation of on-site attached structures ... 39
5.6 Skirting 39
Chapter 6 - Installation of Optional Features 40
6.1 Hinged roofs 40
6.2 Awnings and carports 40
6.4 Ventilation Options 40
6.5 Exterior coverings 40
6.6 Telephone and cable TV 40
6.7 Continuous Ridge Vent 40
Chapter 7 - Preparation of Appliances 49
7.1 Clothes dryer vent 49
7.2 Comfort Cooling systems 49
7.3 Fireplace & wood stove chimneys & air inlets 53
7.4 Range, cooktop and oven venting 53
Chapter 8 - Utility System Connection and Testing 55
8.1 Proper procedures 55
8.2 Water supply 55
8.3 Drainage System 57
8.4 Gas supply 61
8.5 Heating oil systems 62
8.6 Electricity 63
Chapter 9 - Final Inspection 72
9.1 Water and drain systems 72
9.2 Appliance function and operation 72
9.3 Windows, doors and drawers 72
9.4 Exit windows 72
9.5 Exterior siding and trim 72
9.6 Stack heads & vent pipe flashings on roof.. 72
9.7 Composition roof 72
9.8 Skirt venting 72
9.9 Low-hanging trees and bushes 72
9.10 Exhaust fan operation and air flow 72
9.11 Bottomboard 72
9.12 Ground cover 72
9.13 Anchors and straps 72
9.14 Interior details 72
Chapter 10 - Relocating the Home 73
10.1 Relocation of the home 73

RADCO FEDERAL MANUFACTURED HOUSING CONSTRUCTION & SAFETY STANDARDS
MAR 2 4 1995
23
APPROVED

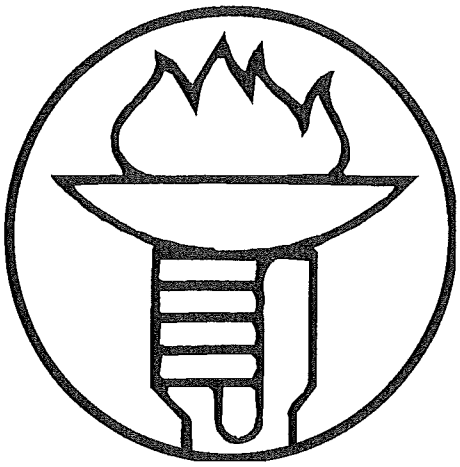

1.1 How to use this manual

This manual contains detailed installation instructions, including specifications and procedures for the proper support and hookup of your manufactured home. It discusses the setup of the home from preparing the site through final inspection. It includes many tables and figures giving important data for proper setup. Careful adherence to this manual by the installation crew will assure you of a quality, safe and affordable home for many years to come. Consultation with a registered professional architect or engineer for those unusual circumstances not covered in this book is required.

1.2 Pre-installation considerations

The design criteria for this home may be found on the data plate, which also contains other essential information such as where this home was manufactured, factory-installed equipment, and heating and cooling information. This data plate may be found attached to the home in one of the following locations:

1. **Rear Bedroom Closet Wall**
2. **Laundry Area**
3. **Water Heater Door**
4. **Near Main Electric Panel**

Please crosscheck the data plate supplied with your home with the roof load, wind and heating / cooling zone maps shown in Figure 3.1 on pages 6 & 7 to assure that your home is built for the proper location. These maps indicate the acceptable areas of the United States where your home may be safely located. Prior to locating or relocating your home, contact the local authority having jurisdiction over home installation to see if permits for such procedures as blocking, anchoring, or utility connections are required. Inspections may be required during installation. On private property, zoning or development covenants may apply and should be taken into consideration. (NOTE: Preparation of the site, when accomplished by other than the home installer, may not be in accordance with these instructions.)

1.3 Safety

This manual is intended to be used by Lisenced installers who are properly trained and qualified to install manufactured housing and associated equipment. Certain operations described herein present risks of possible injury or even death if performed without proper skills and knowledge and such operation should not be attempted by anyone other than a lisenced installer. The following "Warning" format is used throughout this manual to describe many of those hazards:

WARNING

Hazards inherent to the installation of the manufactured home may present risks of injury or death. Installation should be performed by a professional installer only.

THIS HOME MAY WEIGH IN EXCESS OF 30,000 POUNDS

USE ADEQUATE TEMPORARY WOOD BLOCKING TO SUPPORT THE HOME DURING SETUP.

No one should be allowed under the home unless it is securely supported.

1.4 Consumer information card

Refer to the Owner's Maintenance Guide and fill out the **CONSUMER INFORMATION CARD.** Return it to the home's manufacturer, so that you may be notified of revised instructions or new products.

Anchoring Equipment: Straps, cables, turnbuckles and chains, including tension devices, that are used with ties to secure a manufactured home to ground anchors.

Anchoring System: A combination of ties, anchoring equipment, and ground anchors that will, when properly designed and installed, resist the wind overturning the home or moving it sideways.

Data Plate: Self adhesive label required on all manufactured homes containing: name and address of manufacturer, serial no., model no., date of manufacture, list of appliances, zone maps and design approval name.

Evaporative Cooler: A roof or window mounted cooling device utilizing air drawn through water soaked panels. Used primarily in arid climates.

Footing: That part of the support system that sits directly on the ground at, below or partly below grade to support the piers.

Information Packet: The important papers provided with the home including appliance instructions, warranties, high wind covering sizes, etc.

Listed: Certified by a nationally recognized testing laboratory, inspection agency, or other organization concerned with product evaluation that maintains periodic inspection of production of listed equipment or materials, and whose listing states either that the equipment or material meets nationally recognized standards or, has been tested and found suitable for use in a specified manner.

Local Building Authority: County or city inspector from Building department or Zoning department. Whomever issues occupancy permits in your area.

Pier: That portion of the support system between the footing and the manufactured home, exclusive of caps and shims. Types of piers include, but are not limited to, the following:

1. Manufactured steel stands
2. Manufactured concrete stands
3. Concrete blocks

Should: This is a recommendation.

Shall: This is a requirement.

Site, Manufactured Home: A parcel of land designed and designated for the location of one manufactured home, its accessory buildings or structures, and accessory equipment for exclusive use of the home's occupants.

Stabilizing System: A combination of properly installed anchoring and support system.

Stand, Manufactured Home: That area of a manufactured home site which has been reserved for placement of a manufactured home.

Support System: A combination of footings, piers, caps and shims that will, when properly installed, support the manufactured home.

3.1 Location and Layout

3.1.1 Use of zone maps

This home is designed for certain weather conditions and roof loads. (See zone maps near home's main electrical panel and in Figure 3.1 on pages 6 & 7.) Do not site or relocate your home in a zone requiring greater wind, roof load, or heating/cooling capabilities than those for which it was designed. However, it is safe to locate your home in an area with lower load or weather requirements. For example, a home designed for a northern roof load of 40 psf may be sited in the southern roof load zone.

3.1.2 Access for transporter

Before having your transporter move your home to the installation site, be sure the transportation equipment and home has unobstructed access to the site. Remove any overhanging branches or ground obstruction. Beware not to come into contact with any overhead electrical or telephone wires. Special transportation permits may be required from state, county or city officials.

3.1.3 Encroachments and setback distances

Be sure to comply with all local laws regarding encroachments in streets, yards and courts, and permissible setback distances from property lines and public roads. Consider future additions, such as awnings and screen rooms when installing your home.

3.1.4 Issuance of permits

Be sure that all necessary local permits have been obtained and fees paid.

3.2 Soil Conditions

3.2.1 Firm Foundations

A firm foundation is absolutely necessary before the home is blocked and leveled. This will be considered before Champion Home Builders Co. honors any settling-related warranty claims. If the site is on filled-in soil, it must be compacted to at least 90% of its maximum relative density. If you are unsure of soil bearing capacity, confer with your local building authority for the recommended soil bearing capacity in your location.

3.2.2 Bearing capacity

If the building authority does not have the proper information on allowable soil pressures, test the bearing capacity of the soil at the depth of the footings after completing any grading and filling (see Section 3.2.3). If you can't test the soil but can identify its type, use the foundation bearing pressures shown in Table 3.1 on page 8 as a guide. If you cannot identify the soil, use the lowest value (1000 psf from Table 3.1 on page 8). Under unusual conditions, or if the soil appears to be peat or uncompacted fill, consult a local geologist or professional engineer.

3.2.3 Soil bearing testing methods and equipment

A pocket penetrometer (available from engineering supply houses) or other methods acceptable to local jurisdictions may be used.

3.3 Removal of organic material

Remove all decayable material such as grass, roots and wood scraps from beneath the home, especially in areas where footings are to be placed, to minimize settling of footings and insect damage.

3.4 Drainage

3.4.1 Purpose

Drainage prevents water buildup under the home which may cause settling of the foundation, dampness in the home, damage to siding, buckling of walls and floors, and problems with the operation of doors and windows. **THIS DAMAGE MAY NOT BE COVERED BY THE WARRANTY.**

3.4.2 Elimination of depressions

Grade the home site to permit water to drain from under the home. See Figure 3.2 on page 9.

3.5 Ground moisture control

3.5.1 Importance

If the crawl space under the home is to be enclosed with skirting or other material, a vapor retarder that keeps ground moisture out of the home must be installed.

3.5.2 Acceptable types of ground cover

Use polyethylene sheeting or its equivalent, which is at least six mils thick.

3.5.3 Proper installation

Cover the entire area under the home with the sheeting and overlap it at least 6" at all joints. Where soil and frost conditions permit placement of footings at grade level, place the sheeting directly beneath the footing.

Figure 3.1- Zone Maps of the United States

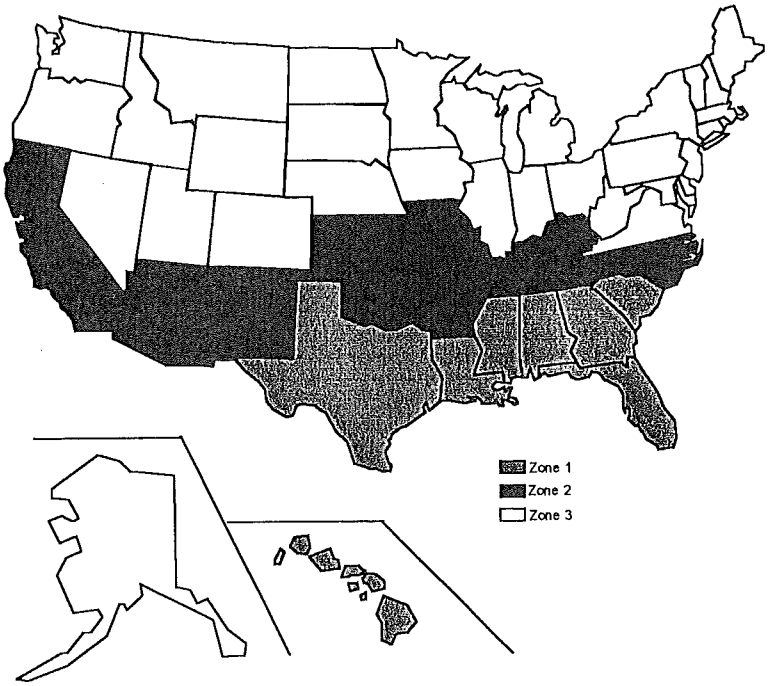

Heating and Cooling Zone Map

Figure 3.1- Zone Maps of the United States (Continued)

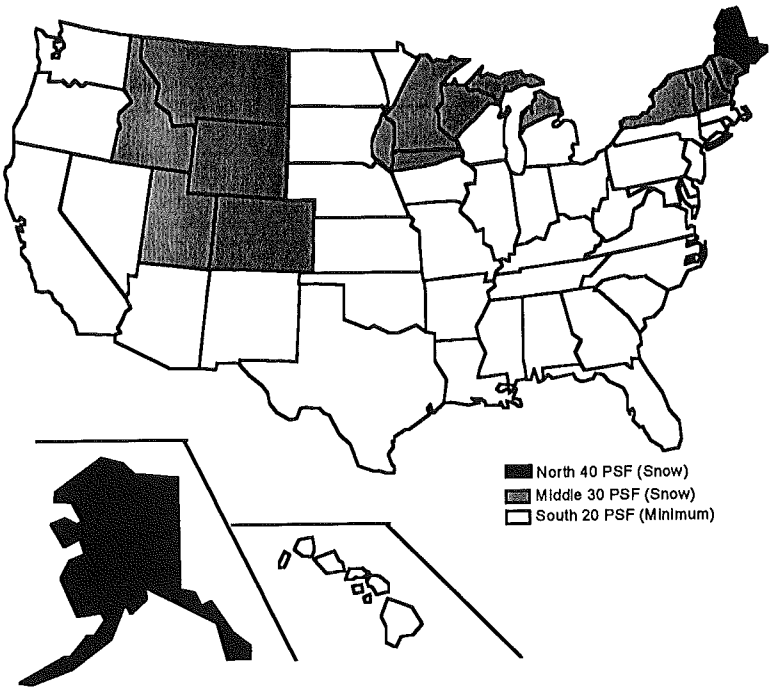

Roof Load Zone Map

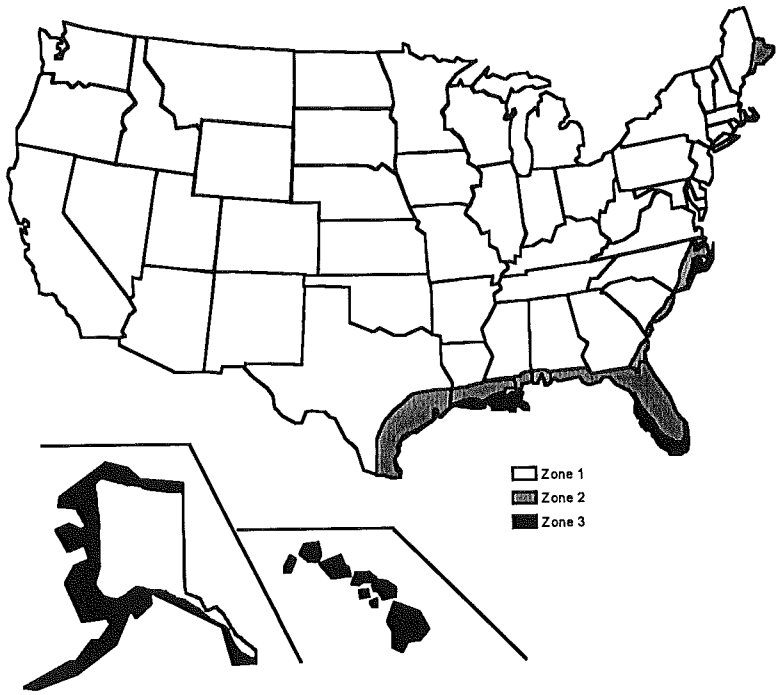

Wind Load Zone Map

Table 3.1: Soil Pressures

Description	ASTM Classification	Field Identification	Allowable Bearing (lbs/sq. ft.)
Massive crystalline Bedrock	None	Dense firm Bedrock	4000
Gravel, well-graded; little or no fines	GW	Significant amounts of coarse rock fragments; easily pulverized; fast draining; wide range of grain sizes	2000
Gravel, poorly graded; little or no fines	GP	Significant amounts of coarse rock fragments; easily pulverized; fast draining; has narrow range of sizes or is gap-graded	2000
Silty gravel and gravel-sand-silt mixes	GM	Gravely but forms clumps that pulverize with modertate effort; wet sample takes little or no remolding before disintegrating; slow draining	1500
Clayey gravel and gravel-sand-clay mixes	GC	Gravely but forms hard clumps that require considerable effort to pulverize; wet sample takes some remolding before disintegrating; very slow draining	1500
Sand, well graded; gravely sand; little or no fines	SW	Relatively clean sand with wide size range; easily pulverized; fast draining	1500
Sand, poorly graded; gravely sand; little or no fines	SP	Relatively clean sand with narrow size range of gaps in grading; easily pulverized; fast draining	1500
Silty sand and sand-silt mixes	SM	Sandy soil; forms clumps that can be pulverized with moderate effort; wet sample takes little remolding before disintegrating; slow draining	1500
Clayey sand and sand-clay mixes	SC	Sandy soil forms clumps that offer some resistance to being pulverized; wet sample takes some remolding before disintegrating; very slow draining	1500
Inorganic silt, very fine sand, rock flour, silty or clayey fine sand	ML	Fine-grained soil of low plasticity; slow draining; dry clumps easily pulverized ; won't form thin thread when molded	1000
Lean clay; inorganic clay of low to medium plasticity; gravely clay; sandy clay; silty clay	CL	Fine-grained soil of low plasticity; slow draining; dry clumps quite hard, but not very difficult to pulverize	1000
Inorganic silt; micaceous or diatomaceous fine sands or silt; elastic silt	MH	Fine-grained soils of low plasticity; slow draining; dry clumps quite hard, but not very difficult to pulverize; spongy; compressible wet or dry	1000
Fat clay; inorganic clay of high plasticity	CH	Fine-grained soil of high plasticity; sticky and highly moldable without fracture when wet; non-drainig; impervious; dry clumps very hard and very difficult to pulverize; highly compressible	1000
Organic silt and organic silty clay of low plasticity	OL	Fine-grained soil of low plasticity; slow draining; dry clumps quite hard, but not very difficult to pulverize; typical slight musty, rotting odor	Foundation investigation required
Organic clay of medium to high plasticity; peat, muck, topsoil	OH PT	Fine-grained soil of medium to high plasticity; sticky and moderately moldable without fracture when wet; non-draining; impervious; dry clumps hard; moderately difficult to pulverize; highly compressible typical slight musty, rotting odor	Not usable

Notes:
1. This chart is to be used only when none of the following is available:
   a. Soils investigation & analysis of site.
   b. Compliance with local building code.
   c. Competent opinion by local engineer or building official.
2. Allowable bearing numbers do not allow for overburden pressure, embedment depth, water table height, or settlement problems

Figure 3.2 - Elimination of water beneath home

Single-section

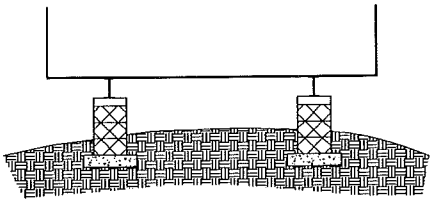

Multisection

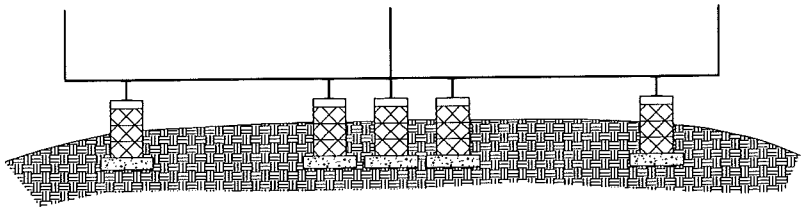

DO: Crown and grade site to slope away from home, and cover with 6 mil poyethylene sheeting or equivalent.

Single-section

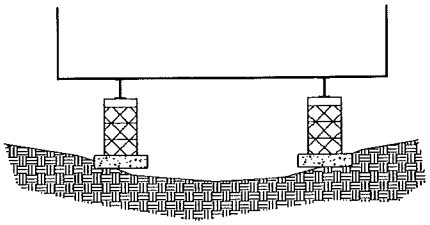

Multisection

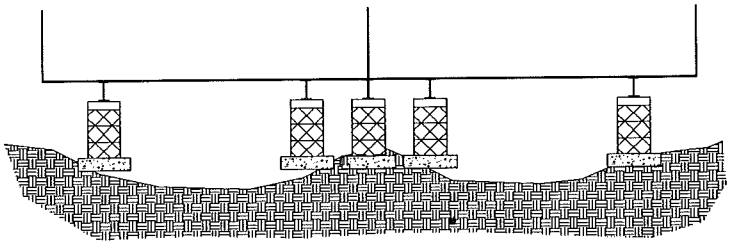

DON'T: Grade site so that water collects beneath home, or place footings above frost line.

NOTE: This chapter covers only foundations. Setup procedures and methods for securing the home to its foundation are discussed in Chapter 5.

4.1 Piers

4.1.1 Importance

Incorrect size, location or spacing of piers may cause serious structural damage to your home. It is important to install piers around the perimeter if required on your data plate. See Section 1.2.

4.1.2 Acceptable types

Piers may be concrete blocks capped and shimmed with wedges, or adjustable manufactured metal or concrete devices (see Figure 4.1 on page 14). Manufactured piers should be labeled for the required load capacity.

4.1.3 Design requirements

4.1.3.1 Load-Bearing Capacity

The load that each pier must carry depends on factors such as the dimensions of the home, the roof load, the spacing of the piers, and the way they are used to support the home. Marriage wall blocking is required at openings greater than 4' for multisection homes.

See Tables 4.1, 4.2 and 4.3 on pages 16 & 17 for pier capacities. Manufactured piers must be rated no less than these capacities, and locally-constructed piers must be designed to transmit these loads safely (see section 4.1.3.2).

4.1.3.2 Configuration

Figure 4.3 and 4.4 on pages 19 and 20 shows the recommended arrangement of concrete block piers constructed on-site. Concrete blocks should have nominal dimensions of at least 8" x 16". They must be stacked with their hollow cells aligned vertically. When piers are constructed of blocks stacked side-by-side every layer shall be at right angles to the pervious one (see Figure 4.1 on page 14).

Cap hollow block piers as shown in Figure 4.1 to distribute the structural load evenly across them. Caps may be of solid masonry or wood, and of the same length and width as the piers they rest upon. (See Figure 4.1) Avoid plywood, as it may lead to unwanted settling or movement.

Use 4" x 6" hardwood shims to level the home and fill any gaps between the base of the I-beam and the top of the pier cap. Always use shims in pairs (see Figure 4.1 on page 14). Drive them in tightly, they should not occupy more than 1" of vertical space. When the space to be shimmed is more than 1", dimension lumber may be used under the shims.

Select manufactured pier heights so that their adjustable risers do not extend more than 3" when finally positioned.

All piers must rest on footings (see section 4.2) that either extend below the frost line or are otherwise protected from frost effects, and are placed on either undisturbed soil or compacted fill.

4.1.3.3 Clearance under the home

Clearance should average a minimum of 30" from the ground to the bottom of the floor.

4.1.4 Design procedures

4.1.4.1 Piers 36" high or less

You may construct piers 36" high or less

out of single, open or closed cell concrete blocks, 8" x 8" x 16". Install them so that the long side is at a right angle to the supported I-beam (see Figure 4.1 on page 14). Position open cells at right angles to the footers. Horizontal offsets should not exceed 1/2" top to bottom. Mortar is not normally required.

4.1.4.2 Piers 36" to 80" high

Construct all piers between 36" and 80" high, out of double, interlocked concrete blocks (see Figure 4.1 on page 14). Mortar is not normally required.

4.1.4.3 Piers 80" to 120" high

Where permitted by local codes, lay them in concrete mortar with steel reinforcing bars inserted in the blocks cells and fill the cells with concrete. Have piers over 120" high designed by registered professional or structural engineer.

4.1.5 Location and spacing

The location and spacing of piers depends upon the dimensions and weight of the home, the roof load zone, the type of construction (single or multisection), and other factors such as the locations of doors or other openings and heavy pieces of furniture. In general, locate piers no more than 2' from either end and spaced as required in Tables 4.1 through 4.3 on pages 16 & 17.

4.1.5.1 Single-section homes

Figure 4.3 on page 19 shows the recommended location and spacing of piers for your single-section home.

4.1.5.2 Multisection homes

Figure 4.4 on page 20 shows the recommended location and spacing of piers for your multisection home.

4.1.5.3 Under doors and heavy furniture

Place piers on both sides of sidewall openings of entry doors and openings wider than 4' (such as sliding glass doors), under porch posts, fireplaces and wood stoves, and under the expected locations of heavy pieces of furniture such as pianos, organs, waterbeds, etc. Porch post piers to be designed for half the values in Table 4.3 on page 17.

4.2 Acceptable types of footings

4.2.1.1 Concrete

Footings may consist of precast or poured-in-place concrete, pads, slabs, or ribbons at least 4" thick with a 28-day compressive strength of at least 3,000 psi. Slabs and ribbons are to be properly designed by a registered engineer.

4.2.1.2 Pressure-treated permanent wood

Two layers of 2" thick pressure-treated wood planks, with the long dimension of the second layer placed perpendicular to that of the first, fastened and with cut edges retreated, may also be used. See Figure 4.2 on page 15.

4.2.1.3 Other Materials

Other materials may be approved for this use by local authorities if they provide equal load-bearing capacity and resistance to decay. Examples include:

- 1/2" max. crushed stone,
- 3/8" or 3/4" graduated gravel, or
- 1/16", gravel placed so it provides a bearing capacity of at least 3,000 psf.

4.2.2 Placement in freezing climates

4.2.2.1 Conventional Footings

To prevent the harmful effects of ground frost heave, footings should usually be placed below the frost line. Consult local authorities

to determine frost penetration depth.

4.2.2.2 Floating Slab System

When properly engineered by a registered professional architect or engineer, a "floating slab system" may be used above the frost line. It must be compatible with the anchorage requirements of Section 5.4, and acceptable to the local authority having jurisdiction.

4.2.2.3 Insulated Foundations

Interior footings may also be placed above the frost line when the home is provided with a perimeter foundation or skirting having insulation properties sufficient to prevent freezing of the soil under or adjacent to every load-bearing component of the foundation and acceptable for this purpose to the local authority having jurisdiction. Useful design guidelines may be found in Sections 4.5.7 and 4.5.8 at the end of this chapter. **Insulation systems should be compatible with the requirement to cross-ventilate the entire space under the home (see Section 5.6)**

4.2.3 Proper sizing of footings

Proper sizing of footings depends upon the load-carrying capacity of both the piers and the soil. Determine the pier loads from Tables 4.1 through 4.3 and select an adequately sized footing from Table 4.4 on page 18.

4.3 Permanent Foundations

Check local building codes and regulations and consult a registered professional or structural engineer when siting the home on a permanent foundation (such as a full basement, crawl space or load-bearing perimeter foundation). You may purchase a permanent foundation design that meets most local codes by writing to Champion Home Builders Co., 2701 University Dr. Suite 300 Auburn Hills, Michigan 48326, attention Engineering Department. You may also find useful ideas and design guidelines in reference publications such as those listed in Section 4.5.

4.4. Special Considerations (See also Section 5.4.2)

4.4.1 Flood-prone areas

Champion does not recommend siting the home in river or coastal flood prone areas. Special local regulations or flood insurance provisions may apply. Special elevation and anchoring techniques are required when locating in a flood-prone area. Consult a registered professional or structural engineer to make sure that home design and construction conform to applicable federal, state and local codes and regulations. The FEMA publication listed in Section 4.5 contains design and construction recommendations.

4.4.2 Severe wind areas

Do not place the home in a wind zone more severe than the one indicated on the data plate located by your home's main electrical panel. If the home is designed for wind zones 2 or 3, plywood attaching clips have been provided for covering the windows in severe weather. The information packet includes a list of plywood sizes you will need. Install the plywood per Figure 4.6 on page 21, according to the type of windows the home is installed with.

4.4.3 Special snow load conditions

Homes designed for and located in heavy snowfall areas or subject to other extreme loading conditions may require special piers or footings. See tables and/or special manufacturer's instructions provided with the home.

4.5 Important reference documents

4.5.1 ANSI / NCSBSC A225.1-1987,

"Manufactured Home Installations," NCSBCS, 505 Huntmar Park Drive, Henredon, VA 22070, (703) 437-0100.

4.5.2 ANSI / ASCE 7-88,

"Minimum Design Loads for Buildings and other Structures," ASCE, 345 East 47th st. New York, N. Y. 10017-2398

4.5.3 FEMA 85,

"Manufactured Home Installation in Flood Hazard Areas," FEMA, Washington, DC 20472 (202) 646-2708, September, 1985.

4.5.4 HUD Handbook 4930.3 (1989),

"Permanent Foundations Guide for Manufactured Housing," HUD, 415 7th Street, S.W. Washington, DC 20410.

4.5.5 "All-Weather Wood Foundation Systems Manual",

National Forest Products Association, 1619 Massachusetts Ave., N.W. Washington, DC 20036, June, 1976.

4.5.6 "Frost-Free Shallow Foundation Design Guidelines",

Energy Design Update, March 1988.

4.5.7 "Building Foundation Design Guidebook",

Document No. DE 88013350, National Technical Information Service, 5285 Port Royal Road, Springfield, VA 22161.

Figure 4.1: Typical Piers

CONCRETE BLOCK

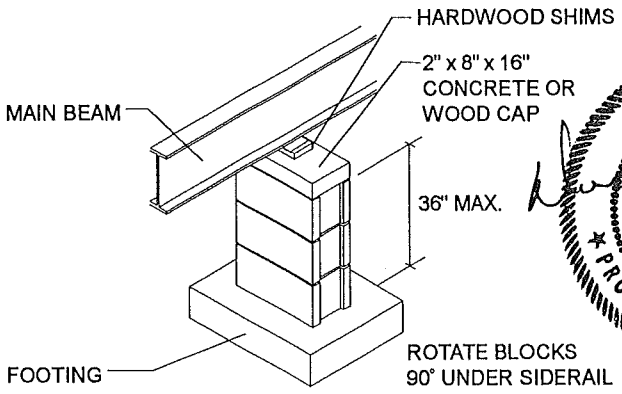

SINGLE STACK
(FRAME, SIDE RAIL, MARRIAGE LINE)
8"x 8" x 16" CONCRETE BLOCK
(MAX. LOAD 8,000 LBS)

MAX. 25% OF PIERS MAY BE OVER 36" SEE FIG. 4.5

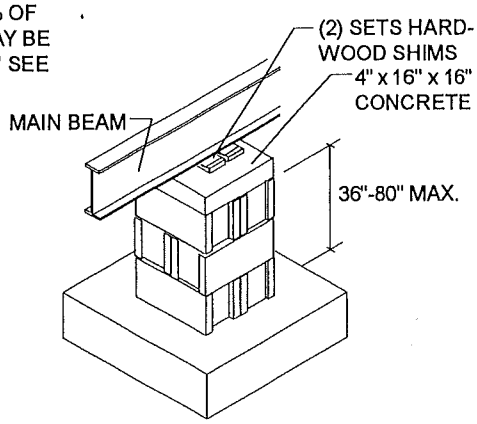

DOUBLE STACK
(FRAME, SIDE RAIL, MARRIAGE LINE)
8"x 8" x 16" CONC. BLOCK
(MAX. LOAD 16,000 LBS)

MAX. 25% OF PIERS MAY BE OVER 36" SEE FIG. 4.5

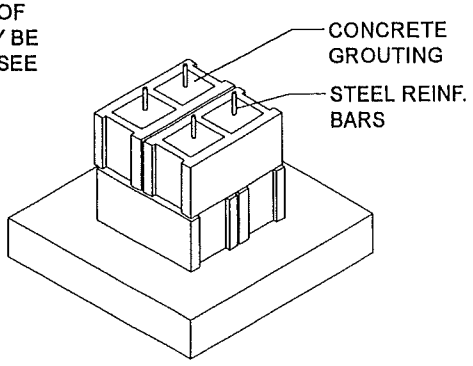

FOR PIERS 80" - 120" IN HEIGHT CONC. BLOCKS ARE GROUTED SOLID & 3/8" REBAR INTO FTG. IS REQUIRED

STEEL OR CONCRETE JACK

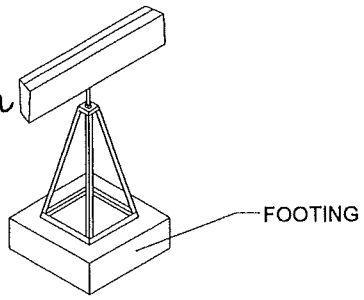

SINGLE JACK
(FRAME, MARRIAGE LINE)
FOR MAX. LOAD CAPACITY SEE MANUFACTURER'S SPECS.

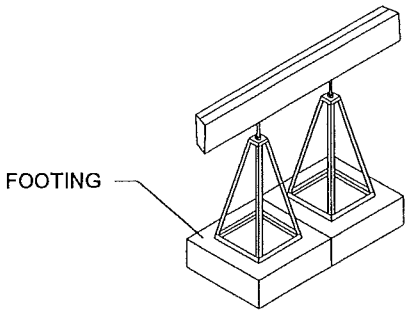

DOUBLE JACK
(MARRIAGE LINE)
2 x JACK CAPACITY

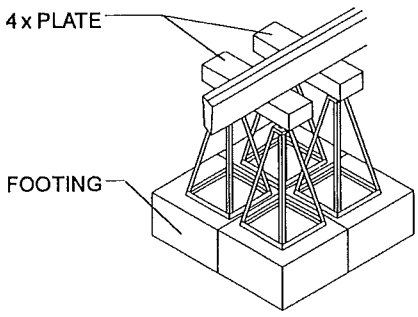

QUAD JACK
(MARRIAGE LINE)
4 x JACK CAPACITY

DAVID R. KELLER REGISTERED No. 8503593 STATE OF INDIANA 4/3/95 PROFESSIONAL ENGINEER

Figure 4.2: Treated Wood Footings

TYP. CONCRETE BLOCK PIER

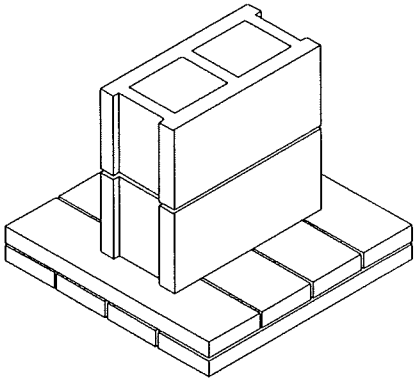

	Concrete Block	Concrete or steel stand -- 12" base	Concrete or steel stand -- 9" base
Footing #1 8 - 2 x 6 x 22" #2 SYP			
2000 PSF soil	6722	6722	6722
3000 PSF soil	6921	6921	6921

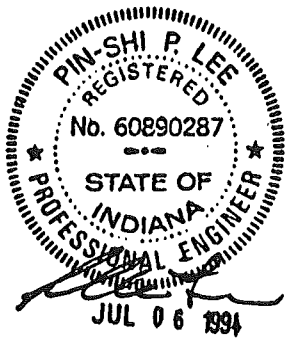

TYP. CONCRETE CONE PIER

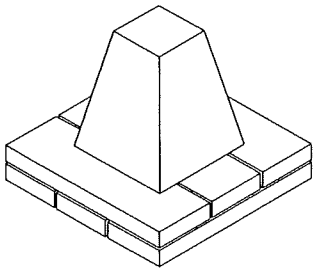

	Concrete Block	Concrete or steel stand -- 12" base	Concrete or steel stand -- 9" base
Footing #2 6 - 2 x 6 x 16 1/2" #2 SYP			
2000 PSF soil	3781	3781	3781
3000 PSF soil	5670	5670	3781

TYP. STEEL JACK PIER

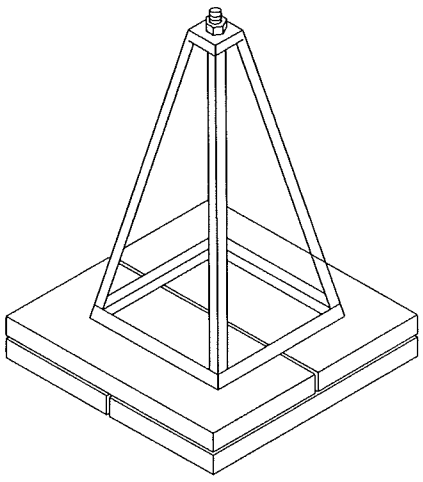

	Concrete Block	Concrete or steel stand -- 12" base	Concrete or steel stand -- 9" base
Footing #3 4 - 2 x 10 x 18 1/2" #2 SYP			
2000 PSF soil	4753	4753	4753
3000 PSF soil	7130	7130	7130 *

* End split, shake and check are limited.

Table 4.1 : Main Beam Pier Loads (lbs.)

(Frame Blocking Only)

Home Width (ft.)	Max. Over-Hang (in.)	Pier Spacing (ft. o.c.)	Design Roof Load (psf) 20	30	40
24 double	16	8	4500	5000	5600
		6	3400	3800	4200
		4	2200	2500	2800
26 double	16	8	4900	5600	6200
		6	3700	4200	4700
		4	2500	2800	3100
14 single and 28 double	16	8	5100	5700	6300
		6	3800	4300	4800
		4	2500	2900	3200
16 single and 32 double	4	8	5500	6200	6800
		6	4200	4600	5100
		4	2800	3100	3400

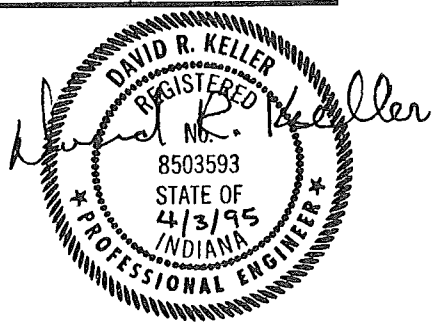

Table 4.2 : Main Beam and Perimeter Pier Loads (lbs.)

(Frame Plus Perimeter Blocking)

Home Width (ft.)	Max. Over-Hang (in.)	Pier Location	Pier Spacing (ft. o.c.)	Design Roof Load (psf) 60	80
24 double	16	Main Beam	8	2500	2500
			6	1900	1900
			4	1300	1300
		Perimeter	8	4200	5400
26 double	16	Main Beam	8	2800	2800
			6	2100	2100
			4	1400	1400
		Perimeter	8	4600	5900
14 single and 28 double	16	Main Beam	8	2900	2900
			6	2200	2200
			4	1400	1400
		Perimeter	8	4700	6000

marriage wall pier capacity same as perimeter pier capacity and shall be spaced 4 ft. o.c.

Table 4.3 : Marriage Wall / Sidewall Opening Pier Loads (lbs)

Home Width (ft)	Clear Span opening in marriage wall (ft)	Design Roof Load (psf) 20	30	40	60	80
24 double	4'-1" to 8	1700	2300	2900	8000	10300
	8'-1" to 12	2600	3400	4300	10000	12900
	12'-1" to 16	3400	4600	5700	12000	15500
	16'-1" to 20	4300	5700	7200	14000	-
	20'-1" to 24	5200	6900	8600	-	-
26 double	4'-1" to 8	1900	2500	3100	8800	11300
	8'-1" to 12	2800	3800	4700	11000	14100
	12'-1" to 16	3800	5000	6300	13200	16900
	16'-1" to 20	4700	6300	7800	15400	-
	20'-1" to 24	5600	7500	9400	-	-
28 double	4'-1" to 8	1900	2600	3200	9000	11500
	8'-1" to 12	2900	3800	4800	11200	14400
	12'-1" to 16	3800	5100	6400	13400	17300
	16'-1" to 20	4800	6400	8000	15700	-
	20'-1" to 24	5800	7700	9600	-	-
32 double	4'-1" to 8	1900	2600	3200		
	8'-1" to 12	2900	3800	4800		
	12'-1" to 16	3800	5100	6400		
	16'-1" to 20	4800	6400	8000		

Sidewall opening pier capacity is 1/2 the load shown above.

Table 4.4 : Minimum Footing Size (in)

Pier Capacity (lb)	Soil Capacity (psf)			
	1000	2000	3000	4000
2,500	19 X 19	16 X 16	16 X 16	16 X 16
3,000	21 X 21	16 X 16	16 X 16	16 X 16
3,500	22 X 22	16 X 16	16 X 16	16 X 16
4,000	24 X 24	17 X 17	16 X 16	16 X 16
4,500	25 X 25	18 X 18	16 X 16	16 X 16
5,000	27 X 27	19 X 19	16 X 16	16 X 16
5,500	28 X 28	20 X 20	16 X 16	16 X 16
6,000	29 X 29	21 X 21	17 X 17	16 X 16
6,500	31 X 31	22 X 22	18 X 18	16 X 16
7,000	32 X 32	22 X 22	18 X 18	16 X 16
7,500	33 X 33	23 X 23	19 X 19	16 X 16
8,000	34 X 34	24 X 24	20 X 20	17 X 17
8,500	35 X 35	25 X 25	20 X 20	17 X 17
9,000	36 X 36	25 X 25	21 X 21	18 X 18
9,500	37 X 37	26 X 26	21 X 21	18 X 18
10,000	38 X 38	27 X 27	22 X 22	19 X 19
10,500	39 X 39	27 X 27	22 X 22	19 X 19
11,000	40 X 40	28 X 28	23 X 23	20 X 20
11,500	41 X 41	29 X 29	23 X 23	20 X 20
12,000	42 X 42	29 X 29	24 X 24	21 X 21
12,500	42 X 42	30 X 30	24 X 24	21 X 21
13,000	43 X 43	31 X 31	25 X 25	22 X 22
13,500	44 X 44	31 X 31	25 X 25	22 X 22
14,000	45 X 45	32 X 32	26 X 26	22 X 22
14,500	46 X 46	32 X 32	26 X 26	23 X 23
15,000	46 X 46	33 X 33	27 X 27	23 X 23
15,500	47 X 47	33 X 33	27 X 27	24 X 24
16,000	48 X 48	34 X 34	28 X 28	24 X 24

Notes:

1. Footings to be placed below frost line.
2. Footing sizes shown are for square pads and are based on the area (square inches) required for the load.
3. Minimum footing thickness table below shows maximum size footings.
4. The area of a rectangular footing must be equal to or greater then the area of squire footing shown.

Maximum Footing Size per Footing Thickness

Minimum Footing Thickness (in.)

Footing Type	4	6	8	10	12	16
Single Block or Conc. Pier	16" x 16"	20" x 20"	24" x 24"	28" x 28"	32" x 32"	40" x 40"
Single or Double Steel Pier	20" x 20"	24" x 24"	28" x 28"	32" x 32"	36" x 36"	44" x 44"
Double Block or Quad Piers	24" x 24"	28" x 28"	32" x 32"	36" x 36"	40" x 40"	48" x 48"

Notes:

1. Concrete piers are 8" base minimum.
2. Steel piers are 12" base minimum.
3. Use the longest side of a rectangular footing for the above dimensions. i.e. a 24" x 16" footing thickness equals that of a 24" x 24" square footing.

Figure 4.3: Typical blocking diagram for single-section homes

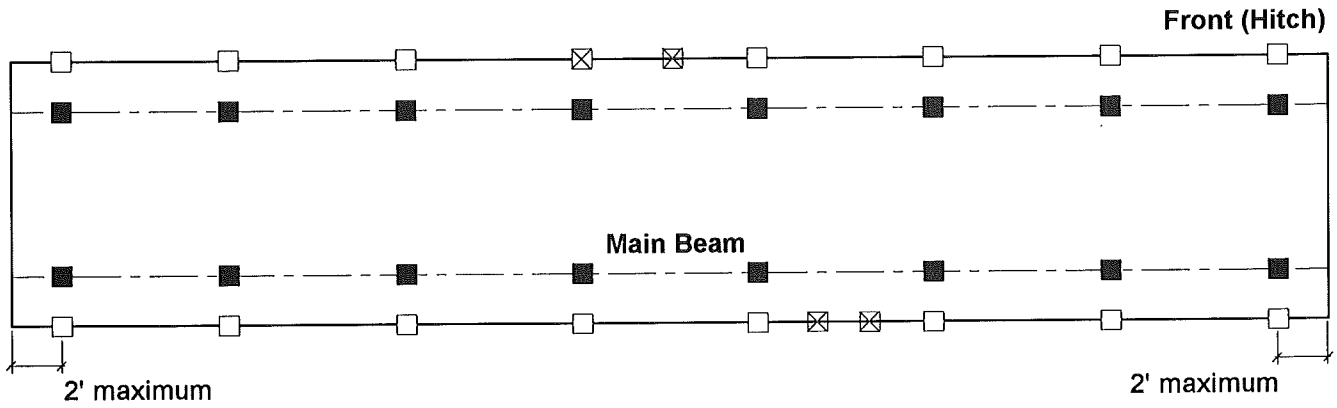

■ **Frame support**

□ **Perimeter support if used**

☒ **Blocking at Doors, Bay Windows, etc.**

Notes:

1. See Table **4.1** & **4.2** on page 16 for required pier capacity and spacing.
2. See Table **4.4** on page 18 and Section **4.2** for footing requirements.
3. Piers shall be located within 2 feet from both ends.
4. Piers shall be located at each side of all perimeter openings greater than 4 feet. This would include doors, recessed entries, large bay windows and porches. See table **4.3** on page 17 for pier capacities.
5. Perimeter support recommended for gypsum board tape and texture homes.

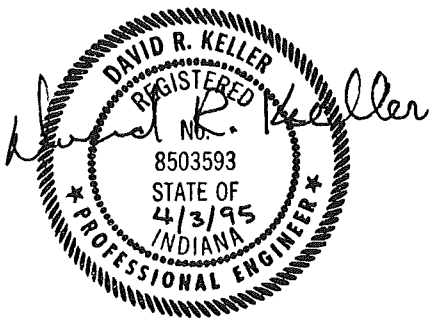

DAVID R. KELLER
REGISTERED
8503593
STATE OF
4/3/95
INDIANA
PROFESSIONAL ENGINEER

Figure 4.4: Typical blocking diagram for multi-section homes

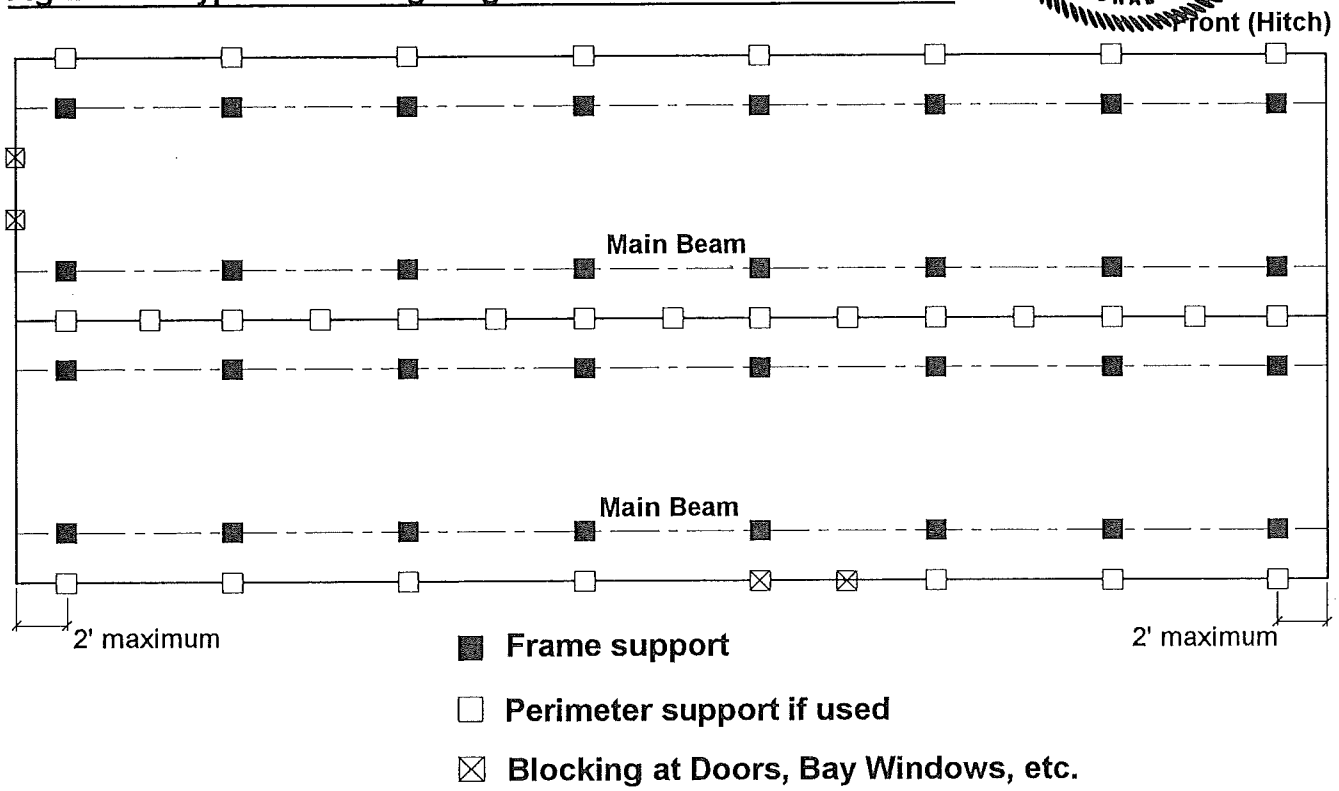

Notes:

1. See Table **4.1** & **4.2** on page 16 for required pier capacity and spacing.
2. See Table **4.4** on page 18 and Section **4.2** for footing requirements.
3. Piers shall be located within 2 feet from both ends.
4. Piers shall be located at each side of all perimeter openings greater than 4 feet. This would include doors, recessed entries, large bay windows and porches. See Table **4.3** on page 17 for pier capacities.
5. See Table **4.3** on page 17 for pier capacities at large marriage wall openings.
6. For piers supporting two adjacent openings, the capacity shall be the sum of the capacities from each span.
7. Perimeter support recommended for gypsum board tape and texture homes.
8. Off-set design: Double-section homes having the floors offset (up to 4') from each other shall be tied down and blocked as a single-section home for that portion of the floor which extends past the other. Blocking shall be placed at the inside corner(s) where the floors join.

Figure 4.5: Pier Placement

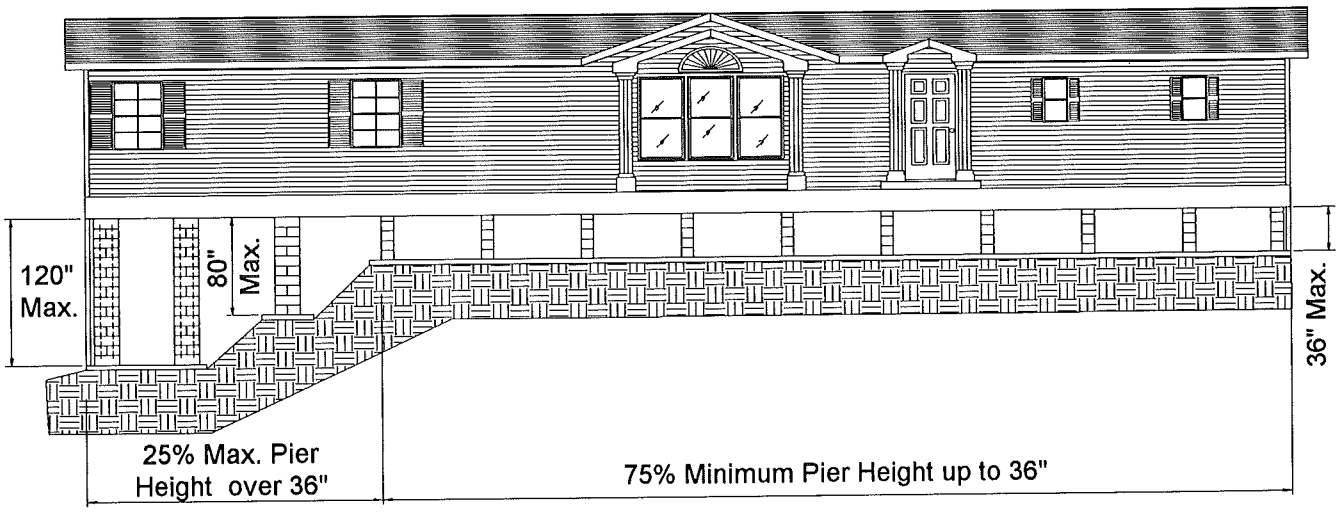

Figure 4.6: Severe Weather Window Protection Clips

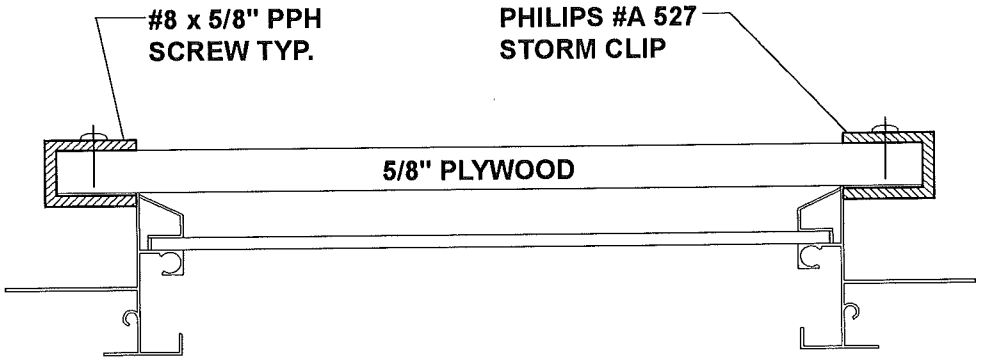

LAP APPLICATION

FOR FURTHER INFORMATION, ON THE INSTALLATION OF STORM SHUTTERS IN WIND ZONES 2 OR 3 REFER TO PHILIPS PRODUCTS DRAWINGS: 4386-01 REVISION A, 4386-02 REV. A, 4386-04, 4386-05 REV. A, AND 4386-08, INCLUDED WITH THE INFORMATION PACKET.

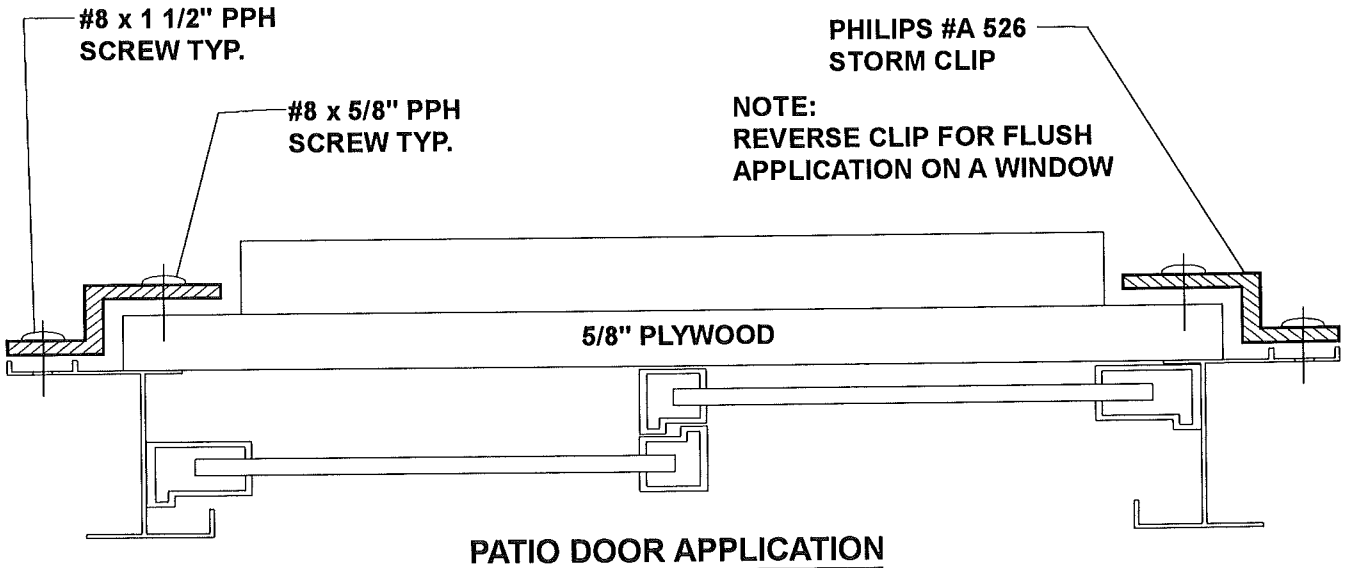

PATIO DOOR APPLICATION

5.1 Moving home to location

Make sure the following items are completed before placing the home:

-The site is properly prepared. See Chapter 3.
-All concrete work necessary to setting the home is finished.
-Utilities are installed or available.
-Any trenching for crossover drain lines is complete.
-Items that could be difficult to install after the home is sited (such as anchors and ground moisture retarders) are in their proper locations.

WARNING

GETTING UNDER A MANUFACTURED HOME WHEN IT IS JACKED UP OR TEMPORARILY SUPPORTED IS DANGEROUS. IF THE HOME SLIPS OFF THE JACK OR SUPPORT, YOU OR SOMEONE ELSE COULD BE SERIOUSLY OR FATALLY INJURED. If it is ever necessary to get under the home during movement or setup operations, make sure there is sufficient blocking to safely carry the load of the home. If the home is being moved by jacking or other means, make sure there are adequate timbers or other safety blocking materials supported in place so as to safely limit the distance the home can fall or unexpectedly move.

EXCESSIVE JACKING OF THE HOME MAY CAUSE IT TO BECOME UNSTABLE AND MAY CAUSE FAILURE OF THE FRAME. Do not raise the home to the point where the center of gravity of the section is no longer supported by stable supports.

Installation and Setup of the home should be performed by skilled professionals only.

Always follow these six minimum safety precautions when jacking a home.

1. Use jacks in good condition with a 12 ton minimum rating.
2. Provide a firm support such as wood blocking or a steel plate underneath the jack bases to prevent the jack from tipping.
3. Leave tires and axles on the unit until all blocking is completed to reduce the risk from collapse.
4. Distribute the concentrated loads created by the jacks by using 3/8"x4"x12" steel plates or "C" channels or 4"x4" hardwood blocks between the jacks and main beam. NEVER APPLY THE JACKING LOAD DIRECTLY TO THE I-BEAM OR OTHER STRUCTURAL MEMBER. Such a concentrated load may cause the I-Beam or structural member to fail resulting in the home sliding off the jack.
5. Position safety supports beneath solid members such as I-Beams or floor joists and never under an axle or other spring mounted member.
6. Follow the jacking and blocking procedures described in Sections . 5.2.1 and 5.2.2.

5.2 Positioning home

When not placing the home on a concrete slab or poured-in-place footings, mark the corners of the home, lay out footings and support devices close to where they will be used. Then move the home or first section into position.

5.2.1 Leveling and blocking

Figure 5.1 on page 24 shows the way we recommend you level the home. To prevent tipping or settling, use a firm support under jacks. Use a steel channel or plate between jacks and steel beams to distribute the load. Use equipment in good working condition and strong enough to handle the loads. Work safely whenever you are under, in or around a home that is being set. Use the following jacking sequence:

Raise the hitch higher than its intended final position. Place a support crib underneath it to prevent the home from falling if the jack or hitch fails. Place jacks in the wheel area on each steel beam and raise the home higher that its final position.

Place or erect the piers at the locations determined from Chapter 4. Adjust all pier heights using the leveling procedure of Figure 5.1. Be sure shims are installed. Additional support may be required under doors and heavy furniture per Section 4.1.5.3, and failure to install it may void manufacturer warranties.

Remove the safety supports and lower the home onto the piers.

Check the soundness of all piers and the operation of windows and doors. Adjust the shims on the piers if needed.

5.2.2 Positioning multisection homes

Follow the positioning and leveling procedures of Section 5.2.1 for the first section. Then set the other section(s) as follows

- Place the second section near the first (within two to four feet).

- Remove all shipping materials and check for obstructions that would prevent proper mating of the two units.
- All marriage wall shipping polyethylene film must be removed on entire wall.
- Leave shipping wall framing in place until both units are together and the roof, floor and wall connections have been made.

- Position the footings and piers, as before.

Figure 5.1: Use of Water Level

Material to Make Level

Five gallon pail with lid
Plastic tubing - 100 feet x 3/8" or 1/2"
Cork - 1-1/2"
Male barbed fitting - 3/8" x 3/4"
Steel washer - 7/8"
Nut - 3/4"
Female barbed fitting - 3/8" x 1/2"
Male valve - 1/2"
Pipe sealant...
Cake coloring - 8oz.
Use RV solvent in cold weather...

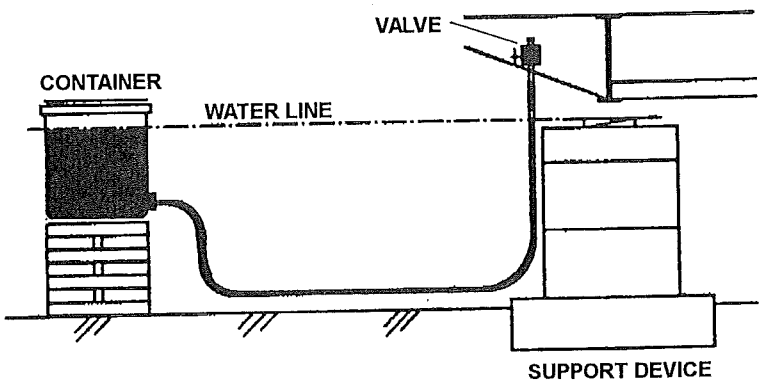

"HOW TO USE A WATER LEVEL"

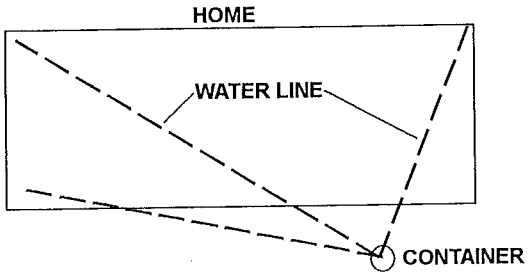

Unroll tubing: Position level where it is to be used. Take care not to have kinks in it, step on it or lay anything on it...

Check for air bubbles: To remove any; lower valve below bottom of container and open. Close valve when they are out...

Container location: Located so valve can reach all areas of home. Build up container so water line in valve end of tubing is at the predetermined height support devices will be set...

Leveling of support device: Secure valve above determined height and open. Adjust device as needed. Close valve and move to next support device...

Note: Level all support devices before lowering home.

5.2.2.1 Hinged roofs

If your home has an optional hinged roof, refer to Section 6.1.

5.2.2.2 Leveling and joining sections

Using the jacking procedures described in Section 5.2.1 raise the second section 1-2" above the first, and install a moving device under it. These may be commercial rollers, blocking on greased boards, or any other method of allowing the home to be safely slid into place. Remove shipping braces from both sections and, aided by the water level, install the footings and piers under the second section. In order to provide a seal between the sections of the home (which will reduce air currents and related problems), attach a strip of insulation (4" or larger in width) along the floor rim rail mating surface, horizontal roof rail at the ceiling line mating surface, up the vertical end walls mating surface and on each side of marriage wall opening (doorwalls, etc..) mating surfaces. This insulation will be compressed to form a seal as the sections of the home move together. After the sections are together check for voids in the seal and pack any remaining voids with insulation. Note: Other resilient materials may be used to form the seal.

5.2.2.3 Interior closure

See Figures 5.2 and 5.3 on page 26.

5.2.2.4 Exterior closure

See Figures 5.4, 5.5, 5.6, and 5.7 on pages 27 & 28.

5.3 Crossover connections for multisection homes

5.3.1 Utility crossovers

Connect water, drainage, gas, electricity and telephone utility crossovers. Chapter 8 outlines the correct procedures.

5.3.2 Heat duct Crossovers

Clamp the flexible air conditioning and/or heating ducts to the sleeves projecting through the bottom covering. Seal the duct's adjustable collars with several wraps of duct tape and suspend the ducts above the ground. If sleeves are not installed, cut opening for one sleeve and attach to main duct directly under furnace (see Figure 5.8 (b) on page 29). A sleeve should be attached to the main duct(s) on the opposing sections at a point where there are approximately as many registers forward as there are to the rear (Figures. 5.8 (a) and (b) on page 29).

Figure 5.2 Int. Closure: Alternate Field Applied Panel Interior End Wall Panel

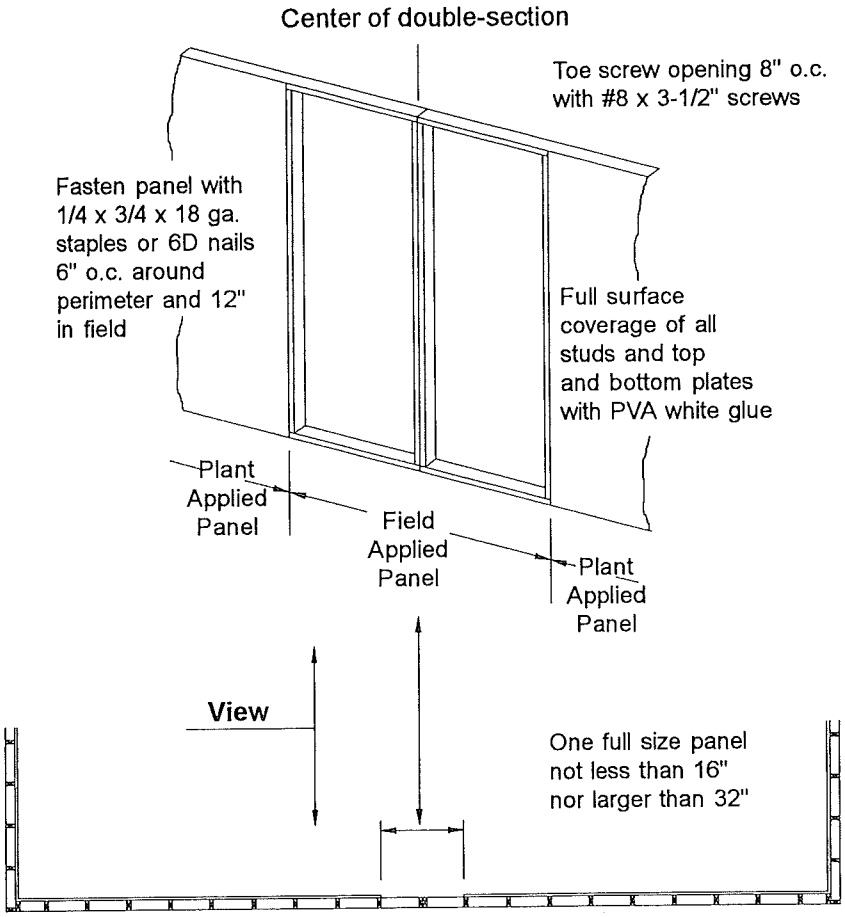

Figure 5.3 Int. Closure: Marriage Wall and Door Opening Connections

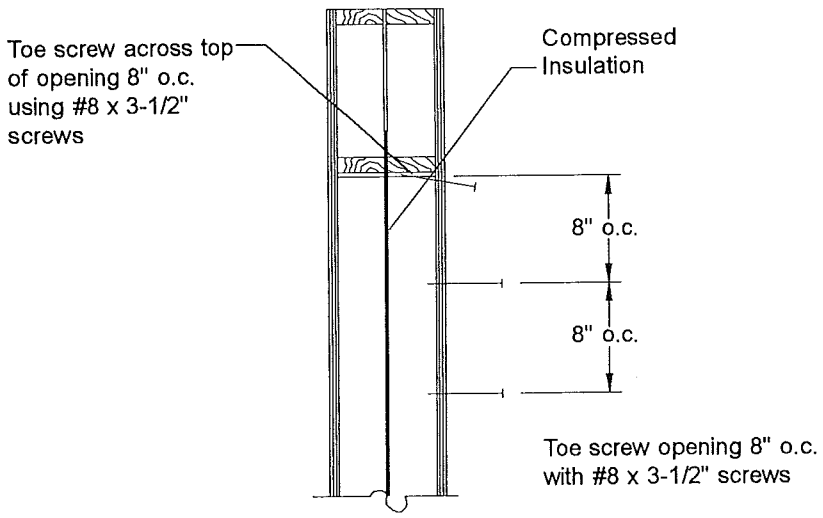

Figure 5.4 Ext. Closure: Double-Section Roof Connection

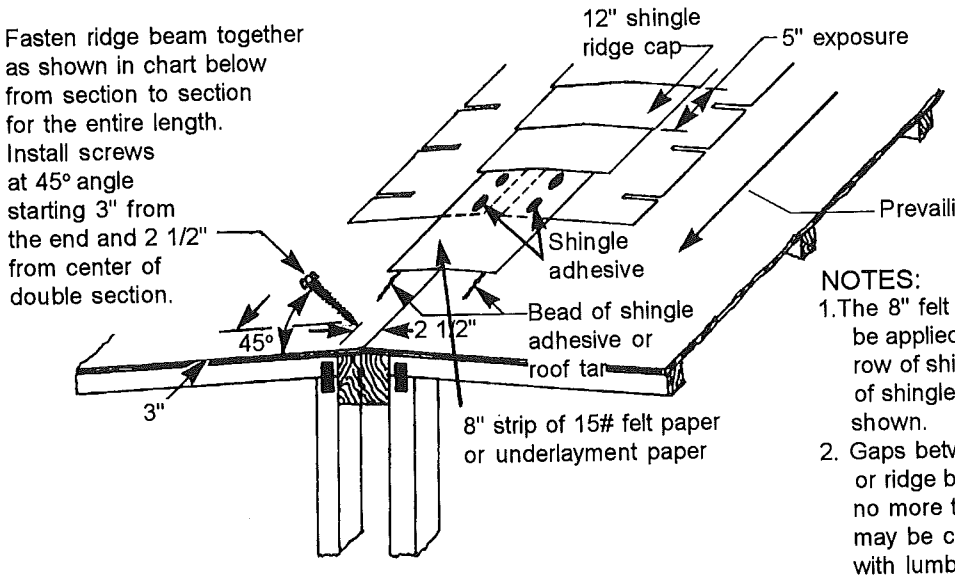

NOTES:

1. The 8" felt strip may be applied on top of the last row of shingles with beads of shingle adhesive as shown.
2. Gaps between ridge rails or ridge beams (which are no more than 1 1/2" wide) may be closed up by filling with lumber and/or plywood shim strips. The lag screws in the shimmed portion shall be increased in length to ensure that they fully penetrate both ridge rails or ridge beams of the home.
3. Install ridge cap shingles with 2 galv. shingle nails 5 1/2" from lap edge and 1" from side edge. Nails shall not be exposed.

LAG SCREW SIZE	SPACING (INCHES O.C. STAGGERED)
3/8" x 5"	32
5/16" x 5"	16
1/4" x 5"	12

Pre-drill lead hole for lag screws

Figure 5.5 Ext. Closure: Double-Section Floor Connection

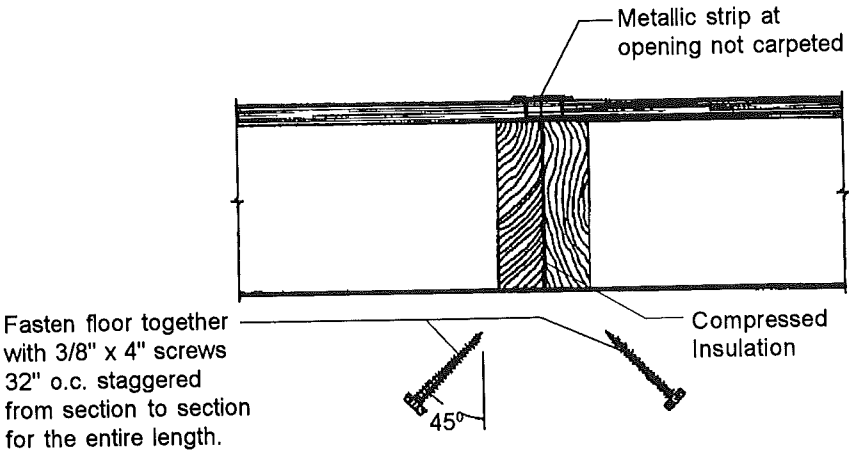

Figure 5.6 Ext. Closure: Alternate Field Applied Wood Siding at End Wall

Wind Zone I Only

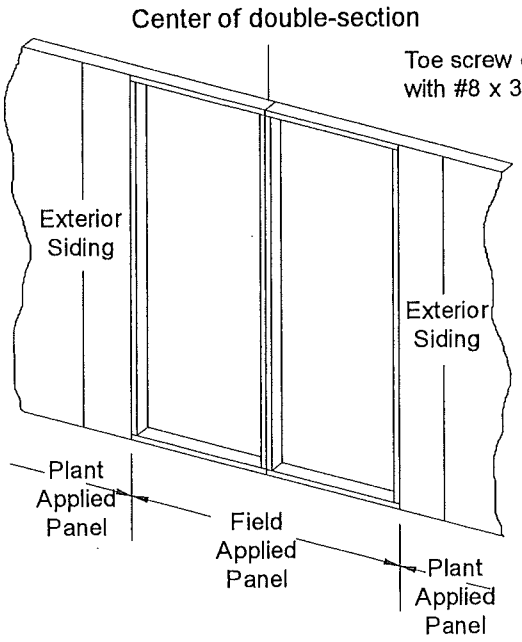

One full size panel not less than 16" nor larger than 32"

Fasten exterior panel to the studs per the siding manufacturer's installation instructions

Figure 5.7 Ext. Closure: Alternate Field Applied Horizontal Lap Siding

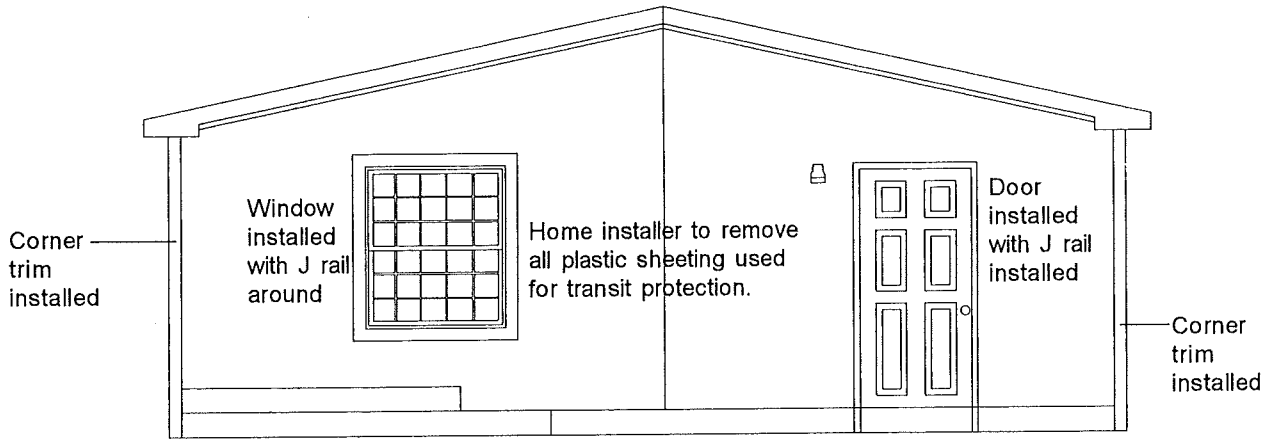

Figure 5.8 - Crossover duct installation

(a)
This system is utilized when the furnace is outside the I beam. With this type of installation, it is necessary that two flexible ducts be installed.

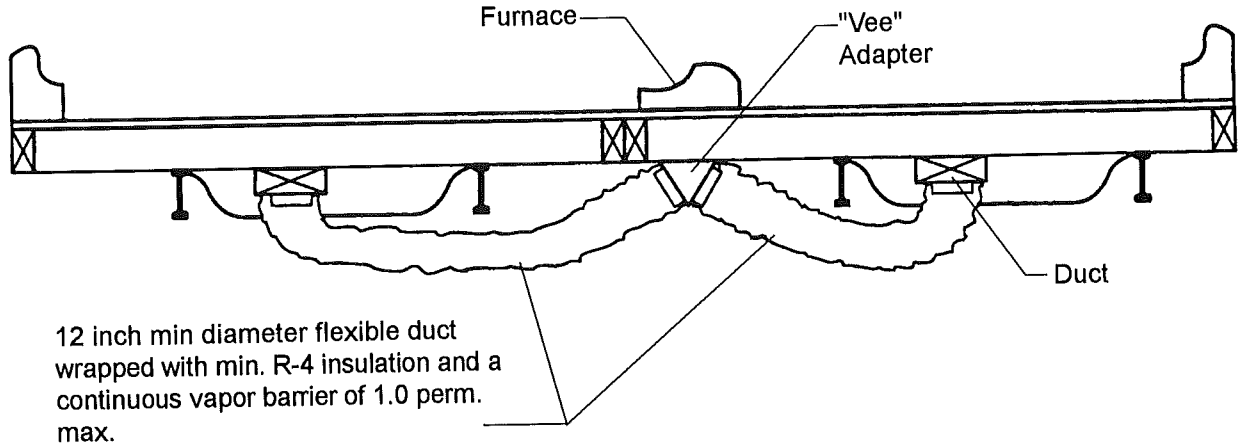

12 inch min diameter flexible duct wrapped with min. R-4 insulation and a continuous vapor barrier of 1.0 perm. max.

Flexible duct shall not be in contact with the ground (strap at 4'-0" o.c. max.)

(b)
This system is used when the furnace is situated directly over the main duct on one section of the home. A single flexible duct is then used to connect the two sections together.

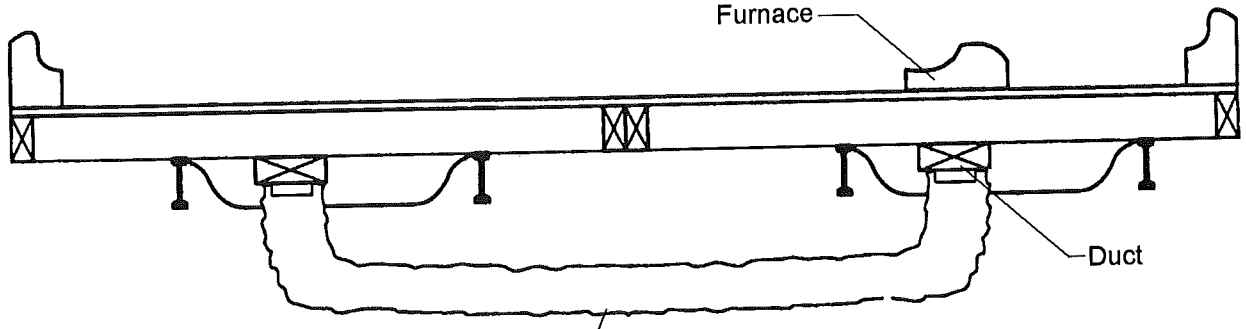

12 inch min diameter flexible duct wrapped with min. R-4 insulation and a continuous vapor barrier of 1.0 perm. max.

Flexible duct shall not be in contact with the ground (strap at 4'-0" max.)

5.4 Anchoring instructions

After blocking and leveling, the installer must secure the home against the wind unless the local jurisdiction permits otherwise. The type of installation determines how this should be done.

WARNING

In order to avoid severe shock or possible electrocution and the possibility of damage to underground services, prior to digging for the purpose of securing anchors make sure that the location of underground electrical cables, gas lines, sewer lines, and water lines are clearly marked above ground.

5.4.1 Normal Installations

The pier and ground anchor system described in this manual is most common. When using another type of installation, consult a registered professional or structural engineer.

5.4.1.1 Tie-down instructions

For Wind Zone 1, decide the correct spacing required for the home type and pier height from Figure 5.10 on page 33 and Figure 5.11 on page 34. At the home site, determine where the perimeter of the floor is in relation to your footing system. Use a stake and string to mark the outline of the perimeter of your home at the site. Install the anchors just inside the perimeter line allowing for skirting if necessary.

The installation should be per the anchor manufacturers instructions. The angle of the anchor shaft will be dependent on two variables. It is dependent on: 1) whether your installation is Zone 1, requiring a single frame strap or in Zones 2 and 3, requiring a frame and ground strap and; 2) pier height. See Figures 5.10 thru 5.15 on pages 33 thru 38.

The anchors in Zone 1 need to be installed at the proper angle prior to the home being moved to the final site, or installed vertically with stabilizing devices. In Zone 1, select the anchor spacing from the tables in Figure 5.10 & 5.11 on pages 33 & 34. Install an anchor within two feet from the ends of the home and no further apart than the spacing listed in the tables for your specific pier height and floor width. The anchor installation shall be at the angle of the frame strap. If the home is already sited, install the anchors vertically and use stabilizing devices.

For Wind Zones 2 and 3, the anchors must be installed where the ground straps are located on the home. This means the home must be present at the site to assure the anchors will be properly located. Anchors in Zones 2 and 3 are installed vertically with stabilizing devices, or installed at proper anchor angle. The home should be on the piers and at its final resting place to assure the correct placement of the anchors with the ground straps on the home. Install a double head anchor at these locations.

PERIODIC RETIGHTING OF FRAME AND GROUND STRAPS IS REQUIRED.

Figure 5.9 Proper Alignment of Straps and Anchors

System 1

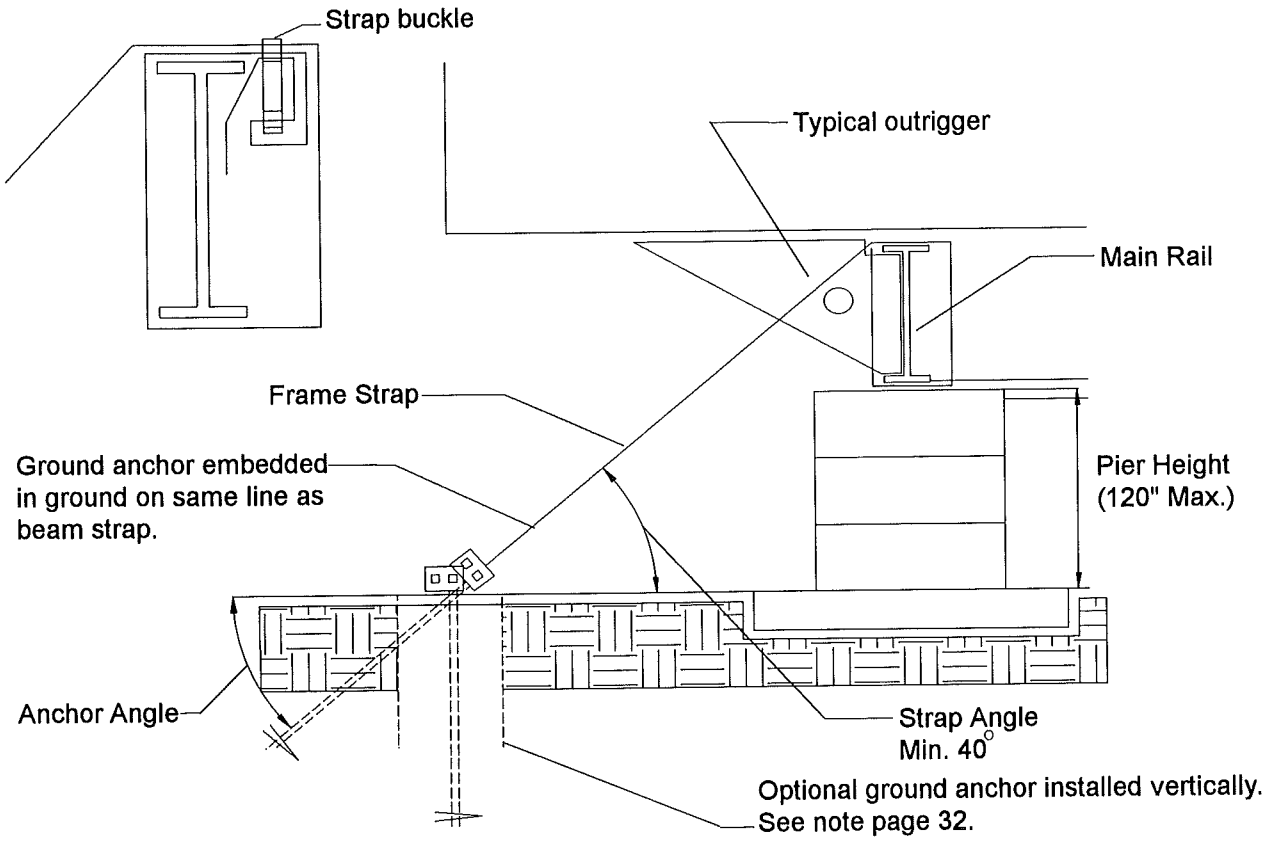

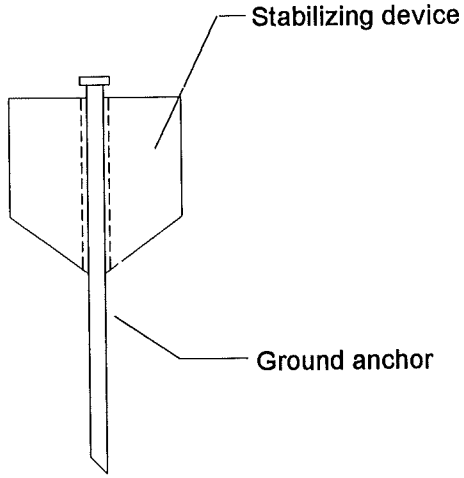

DAVID R. KELLER REGISTERED No. 8503593 STATE OF INDIANA 4/3/95 PROFESSIONAL ENGINEER

Stabilizing Device
Alternate to concrete collar at ground anchor.

Systems 2 & 3

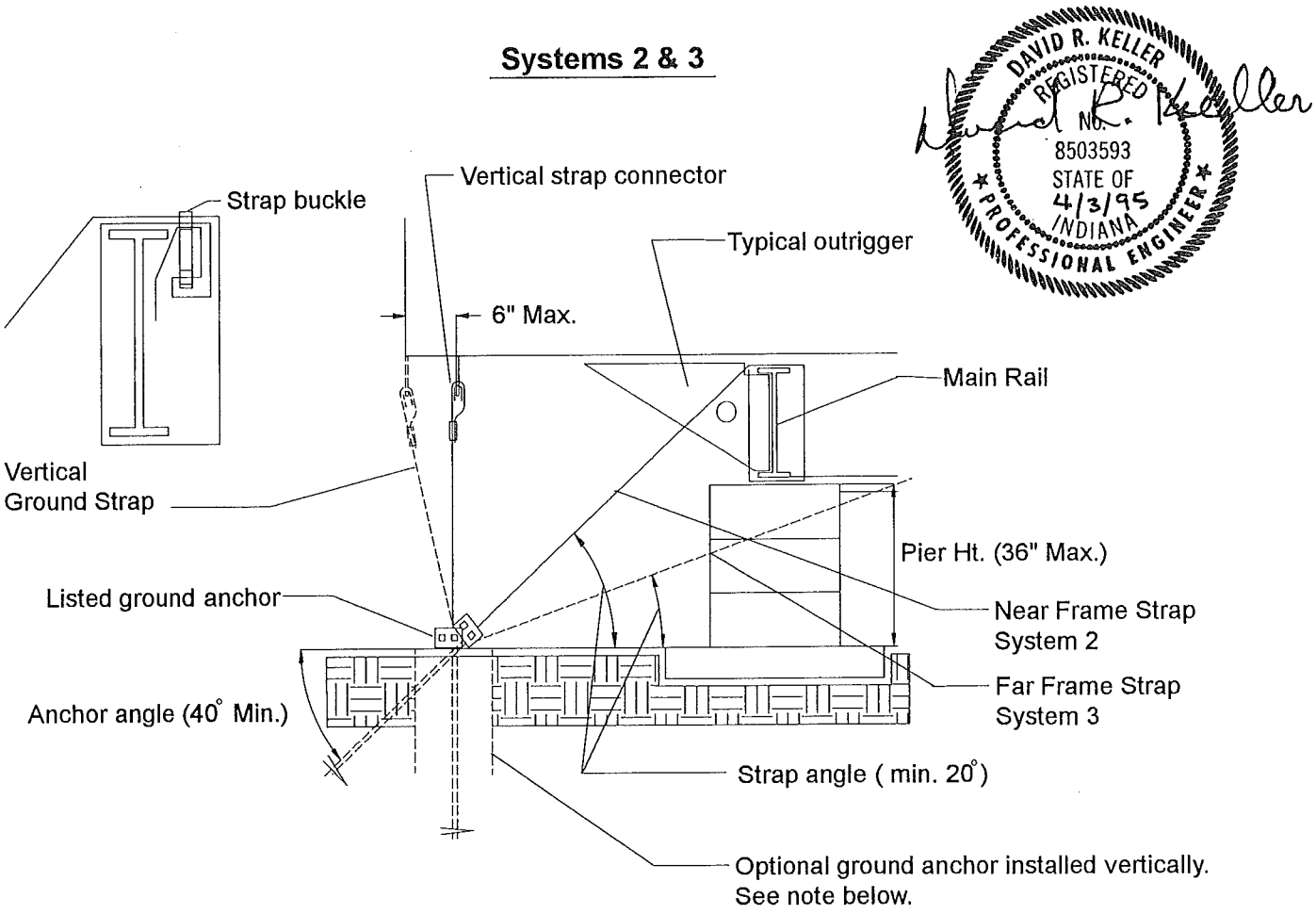

STANDARD NOTES:

1. All anchoring parts must be listed to 4725 lb. min. capacity.
2. Ground anchor maximum vertical/horizontal displacement of 2"
3. Tie down straps shall be listed 1 1/4" wide galvanized strap or equivalent.
4. Ground anchor hardware illustrated, is to be installed in accordance with anchor manufacturer's instructions for rated capacity.
5. Pier supports and footings may be constructed of materials other than as shown. As long as they provide the equivalent load bearing capacity and are acceptable for use by local jurisdiction.
6. Vertical ground straps are not to be used without Beam straps. Vertical ground straps must be fastened to anchors, capable of supporting both straps.
7. There must be an anchor within 24" of each end on both sides.
8. Periodic retightening of frame and ground straps is required.
9. Optional: Ground anchor installed vertically, with adequate concrete cylindrical "collar" poured around the anchor shaft or stabilizing device. Vertically installed ground anchor must be listed for the required capacity with the load applied at the anchor angle shown in system 2 or system 3 tables.
10. Vertical strap connectors are located 5'-4" o.c. in wind zone II or 4'-0" o.c. in wind zone III. Maximum anchor spacing in system 2 tables must be 5'-4" o.c. or greater in zone II or 4'-0" o.c. or greater in zone III. If anchor spacing is less than 5'-0" o.c. in zone II or less than 4' o.c. in zone III you must use system 3.

Figure 5.10 Anchor Spacing for Single-Section Homes

System 1: Wind Zone I only

See detail on page 31

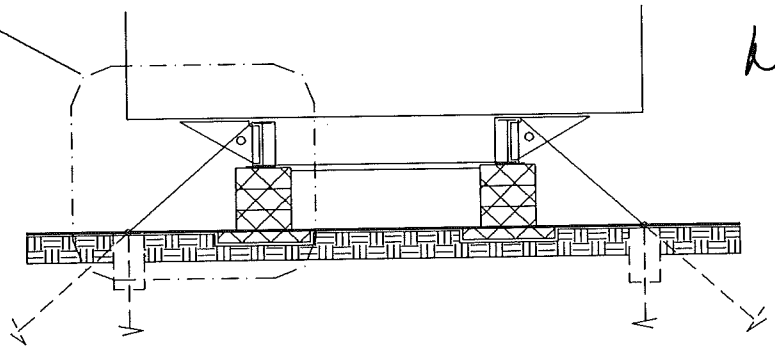

system 1 - 16' Floor

80" Frame		96" Frame		99.5" Frame			
Pier Height (in)		Pier Height (in)		Pier Height (in)		Strap Angle	Max. Anchor Spacing (ft-in)
Min.	Max.	Min.	Max.	Min.	Max.	(Deg.)	Zone I
28	36	22	28	20	27	40	12-4
36	45	28	36	27	34	45	11-5
45	56	36	45	34	43	50	10-4
56	70	45	57	43	54	55	9-3
70	88	57	73	54	69	60	8-1
88	114	73	94	69	90	65	6-10
114	120	94	120	90	120	70	5-6

system 1 - 14' Floor

80" Frame		96" Frame		99.5" Frame			
Pier Height (in)		Pier Height (in)		Pier Height (in)		Strap Angle	Max. Anchor Spacing (ft-in)
Min.	Max.	Min.	Max.	Min.	Max.	(Deg.)	Zone I
19	25	13	17	11	16	40	12-4
25	32	17	23	16	21	45	11-5
32	40	23	30	21	27	50	10-4
40	51	30	38	27	35	55	9-3
51	65	38	49	35	46	60	8-1
65	85	49	65	46	61	65	6-10
85	115	65	89	61	84	70	5-6

Figure 5.11 Anchor Spacing for Multi-Section Homes
System 1: Wind Zone I only

See detail on page 31

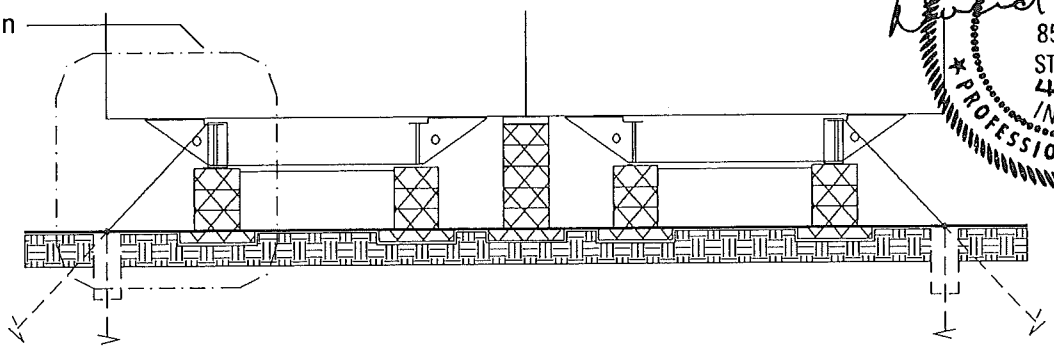

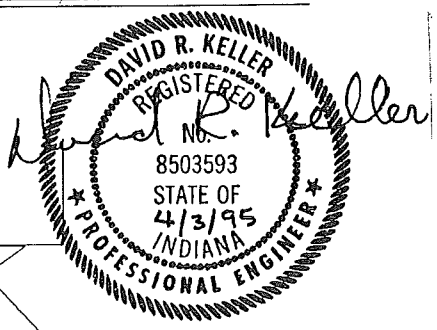

system 1 - 24' Floor

80" Frame		96" Frame		99.5" Frame			
Pier Height (in)		Pier Height (in)		Pier Height (in)		Strap Angle	Max. Anchor Spacing (ft-in)
Min.	Max.	Min.	Max.	Min.	Max.	(Deg.)	Zone I
12	15	-	-	-	-	40	12-4
15	21	12	12	-	-	45	11-5
21	27	12	17	12	14	50	10-4
27	35	17	23	14	20	55	9-3
35	46	23	30	20	27	60	8-1
46	60	30	41	27	37	65	6-10
60	83	41	58	37	52	70	5-6
83	120	58	87	52	79	75	4-2

system 1 - 26' Floor

80" Frame		96" Frame		99.5" Frame			
Pier Height (in)		Pier Height (in)		Pier Height (in)		Strap Angle	Max. Anchor Spacing (ft-in)
Min.	Max.	Min.	Max.	Min.	Max.	(Deg.)	Zone I
17	23	12	15	12	14	40	12-4
23	29	15	21	14	19	45	11-5
29	38	21	27	19	25	50	10-4
38	48	27	35	25	32	55	9-3
48	61	35	46	32	42	60	8-1
61	80	46	60	42	56	65	6-10
80	109	60	83	56	78	70	5-6
109	120	83	120	78	115	75	4-2

system 1 - 28' Floor

80" Frame		96" Frame		99.5" Frame			
Pier Height (in)		Pier Height (in)		Pier Height (in)		Strap Angle	Max. Anchor Spacing (ft-in)
Min.	Max.	Min.	Max.	Min.	Max.	(Deg.)	Zone I
19	25	13	17	12	16	40	12-4
25	32	17	23	16	21	45	11-5
32	40	23	30	21	27	50	10-4
40	51	30	38	27	35	55	9-3
51	65	38	49	35	46	60	8-1
65	85	49	65	46	61	65	6-10
85	115	65	89	61	84	70	5-6
115	120	89	120	84	120	75	4-2

Figure 5.12 Anchor Spacing for Single-Section Homes
System 2: Wind Zone II and III

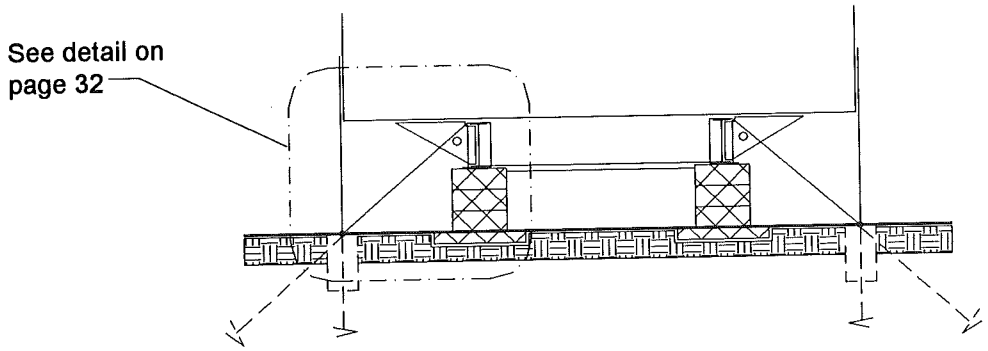

system 2 - 16' Floor

80" Frame		96" Frame		99.5" Frame					
Pier Height (in)		Pier Height (in)		Pier Height (in)		Angle (Deg.)		Max. Anchor Spacing (ft-in)	
Min.	Max.	Min.	Max.	Min.	Max.	Strap	Anchor	Zone II	Zone III
17	23	12	17	12	16	35	51	5-10	4-9
23	30	17	23	16	21	40	54	5-6	4-5
30	36	23	29	21	28	45	57	5-1	4-2
-	-	29	36	28	35	50	60	4-8	-
-	-	-	-	35	36	55	63	4-3	-

system 2 - 14' Floor

80" Frame		96" Frame		99.5" Frame					
Pier Height (in)		Pier Height (in)		Pier Height (in)		Angle (Deg.)		Max. Anchor Spacing (ft-in)	
Min.	Max.	Min.	Max.	Min.	Max.	Strap	Anchor	Zone II	Zone III
14	19	12	12	-	-	40	56	5-3	4-3
19	25	12	16	12	14	45	58	4-10	-
25	32	16	22	14	20	50	61	4-6	-
32	36	22	29	20	26	55	64	4-1	-

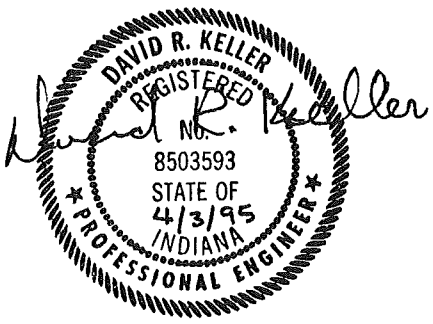

Figure 5.13 Anchor Spacing for Multi-Section Homes
System 2: Wind Zone II and III

See detail on page 32

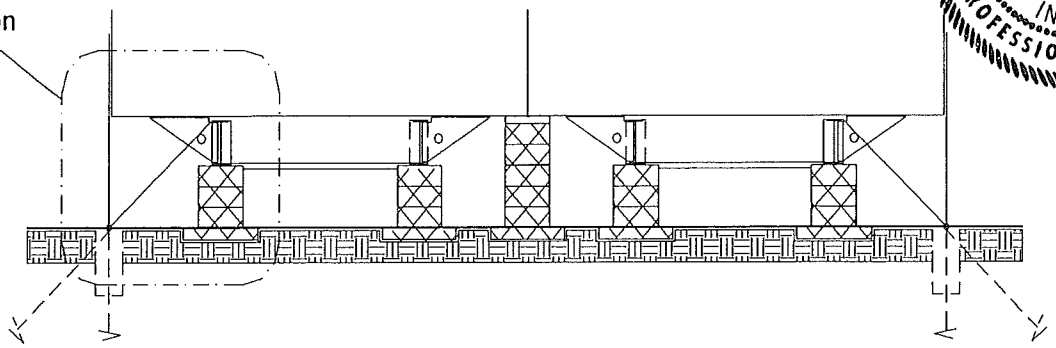

system 2 - 24' Floor

80" Frame		96" Frame		99.5" Frame					
Pier Height (in)		Pier Height (in)		Pier Height (in)		Angle (Deg.)		Max. Anchor Spacing (ft-in)	
Min.	Max.	Min.	Max.	Min.	Max.	Strap	Anchor	Zone II	Zone III
12	14	-	-	-	-	45	58	5-1	4-0
14	19	-	-	-	-	50	60	4-8	-
19	26	12	13	-	-	55	63	4-3	-

system 2 - 26' Floor

80" Frame		96" Frame		99.5" Frame					
Pier Height (in)		Pier Height (in)		Pier Height (in)		Angle (Deg.)		Max. Anchor Spacing (ft-in)	
Min.	Max.	Min.	Max.	Min.	Max.	Strap	Anchor	Zone II	Zone III
13	17	-	-	-	-	40	55	5-6	4-4
17	23	12	14	12	12	45	58	5-1	4-0
23	30	14	19	12	17	50	60	4-8	-
30	38	19	26	17	23	55	63	4-3	-

system 2 - 28' Floor

80" Frame		96" Frame		99.5" Frame					
Pier Height (in)		Pier Height (in)		Pier Height (in)		Angle (Deg.)		Max. Anchor Spacing (ft-in)	
Min.	Max.	Min.	Max.	Min.	Max.	Strap	Anchor	Zone II	Zone III
14	19	12	12	-	-	40	55	5-6	4-4
19	25	12	16	12	14	45	58	5-1	4-0
25	32	16	22	14	20	50	60	4-8	-
32	36	22	29	20	26	55	63	4-3	-

Figure 5.14 Anchor Spacing for Single-Section Homes
System 3: Wind Zone II and III

See detail on page 32

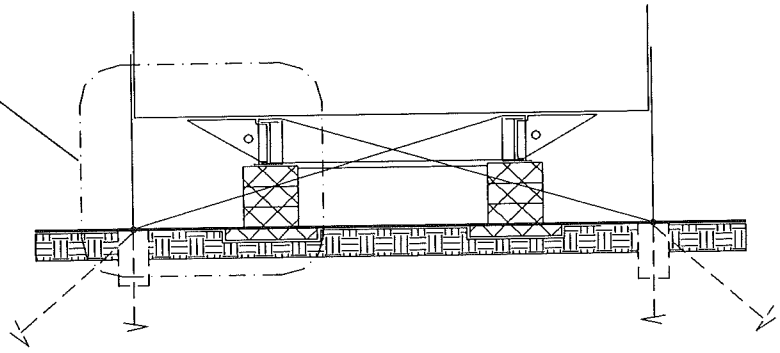

system 3 - 16' Floor

80" Frame		96" Frame		99.5" Frame					
Pier Height (in)		Pier Height (in)		Pier Height (in)		Angle (Deg.)		Max. Anchor Spacing (ft-in)	
Min.	Max.	Min.	Max.	Min.	Max.	Strap	Anchor	Zone II	Zone III
28	36	30	36	31	36	20	42	6-11	5-7
.	.	.	.	.	.	.	.	.	.

system 3 - 14' Floor

80" Frame		96" Frame		99.5" Frame					
Pier Height (in)		Pier Height (in)		Pier Height (in)		Angle (Deg.)		Max. Anchor Spacing (ft-in)	
Min.	Max.	Min.	Max.	Min.	Max.	Strap	Anchor	Zone II	Zone III
23	35	26	36	27	36	20	45	6-7	5-4
35	36	.	.	.	.	25	48	6-3	5-1

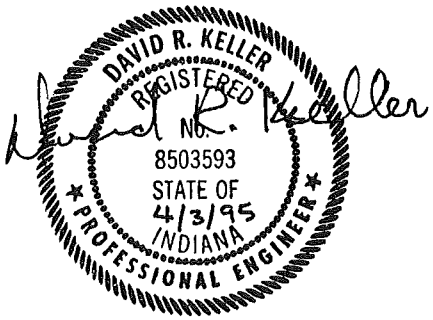

Figure 5.15 Anchor Spacing for Multi-Section Homes
System 3: Wind Zone II and III

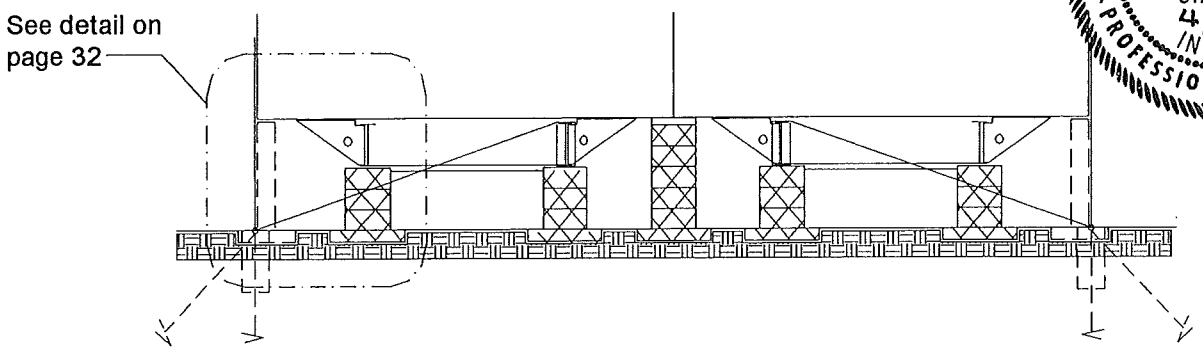

DAVID R. KELLER
REGISTERED
No. 8503593
STATE OF INDIANA
4/3/95
PROFESSIONAL ENGINEER

system 3 - 24' Floor

80" Frame		96" Frame		99.5" Frame					
Pier Height (in)		Pier Height (in)		Pier Height (in)		Angle (Deg.)		Max. Anchor Spacing (ft-in)	
Min.	Max.	Min.	Max.	Min.	Max.	Strap	Anchor	Zone II	Zone III
21	31	23	34	24	35	20	43	6-11	5-6
31	36	34	36	35	36	25	46	6-7	5-3

system 3 - 26' Floor

80" Frame		96" Frame		99.5" Frame					
Pier Height (in)		Pier Height (in)		Pier Height (in)		Angle (Deg.)		Max. Anchor Spacing (ft-in)	
Min.	Max.	Min.	Max.	Min.	Max.	Strap	Anchor	Zone II	Zone III
23	34	26	36	26	36	20	43	6-11	5-6
34	36	-	-	-	-	25	46	6-7	5-3

system 3 - 28' Floor

80" Frame		96" Frame		99.5" Frame					
Pier Height (in)		Pier Height (in)		Pier Height (in)		Angle (Deg.)		Max. Anchor Spacing (ft-in)	
Min.	Max.	Min.	Max.	Min.	Max.	Strap	Anchor	Zone II	Zone III
24	35	26	36	27	36	20	43	6-11	5-6
35	36	-	-	-	-	25	46	6-7	5-3

5.4.2 Severe climatic conditions

5.4.2.1 Freezing Climates

Be sure anchor augers are installed below the frost line. During periods of frost heave, be prepared to adjust tension on the straps to take up slack.

5.4.2.2 Severe wind zones

Champion Home Builders Co. does not recommend installing your home in any zone that requires greater wind-resisting capabilities than those for which it was designed (see data plate). See Section 4.4.2 on page 12 for instructions on protecting the windows in high wind conditions.

5.4.2.3 Flood-prone areas

Champion Home Builders Co. does not recommend siting manufactured homes in flood-prone areas. Foundation considerations are discussed in Section 4.4.1 and the FEMA document referenced in Section 4.5.4. Unconventional anchorage and tie-downs often are needed in designing and constructing the special elevated foundations that may be required in flood-prone areas. Consult a registered professional or structural engineer.

5.5 Installation of on-site attached structures

Design all attached buildings and structures to support all of their own live and dead loads, and to have fire separation as required by state or local ordinances.

5.5.1 Triple wides

Champion Home Builders Co. has separate setup information for triple wide homes. See the Champion Retailer.

5.5.2 Attached garages

Attached garages must be installed according to all applicable local codes. They must be supported independently of the factory-built portion of the home. Electrical circuits in garages should be provided with ground fault interruption.

5.5.3 Porches

Site-constructed porches must be constructed and inspected according to applicable local building codes.

5.5.4 Steps, stairways and landings

Steps, stairways and landings must be constructed and inspected according to applicable local building codes.

5.6 Skirting

Skirting installed around the home shall have nonclosing vents located at or near each corner and as high as possible to cross-ventilate the entire space under the home. Vent free area must be equal to at least one square foot for every 150 square feet of the home's floor area, and this area should be further increased when insect screens, slats, etc. are used over the open vent area. In freezing climates, install skirting so as to accommodate 1-2 inches of frost heave uplift to prevent buckling of floors. Take care that rainwater cannot be channeled or trapped between the skirting and siding, and that normal movement of siding is not restricted. Anchor requirements do not include wind loads applied to the skirting.

6.1 Hinged roofs

If your home has an optional hinged roof or eaves, See Figure 6.1 on pages 41 & 42.

6.2 Awnings and carports

Choose freestanding products with columns to support their weight.

6.3 Miscellaneous Lights and Fixtures

Some exterior lights, ceiling fans and chain-hung fixtures may not yet be installed when the home is delivered. All of these fixtures must be grounded by a fixture-grounding screw or wire. For chain-hung fixtures, use both methods. When fixtures are mounted on combustible surfaces such as hardboard, install a noncombustible ring to completely cover the combustible surface exposed between the fixture canopy and the wiring outlet box. If siding has not been installed at a fixture location, remove the outlet box and install the siding with a hole for the outlet box. Then reinstall the outlet box and proceed as for other fixtures.

6.3.1 Exterior lights

Remove the junction box covers and make wire-to-wire connections using wire nuts. Connect wires black to black, white to white and ground to ground. Push the wires into the box and secure the light fixture to the junction box. Caulk around the base of the light fixture to ensure a watertight seal to the sidewall. Install the light bulb and attach the globe. Refer to Figure 6.2 (a) on page 43.

6.3.2 Ceiling fans

To reduce the risk of injury, install ceiling fans with the trailing edges of the blades at least 6'4" above the floor or in accordance with the fan manufacturer's installation instructions. Follow the manufacturer's instructions, as in Figure 6.3 on page 44. If no instructions are available, connect the wiring as shown in Figure 6.2(b) on page 43.

6.4 Ventilation Options

Champion has several ventilation options available for installation when the home was constructed. If you wish to install one after you purchase your home, the VentilAire IV from Nordyne is a recommended system. Figure 6.4 on page 45 details the installation of the VentilAire IV system.

6.5 Exterior coverings

Install exterior coverings stucco, plywood, vinyl or hardboard exterior siding; shingled or tiled roofs, etc. according to the material manufacturer's instructions. Do not cover the HUD label when applying any field exterior covering.

6.6 Telephone and cable TV

The walls and floors of the manufactured home contain electrical circuits, plumbing and duct work. Avoid contact with these home systems when drilling through and placing cables within these cavities. Only trained professionals should handle such work. Figure 6.5 on page 46 shows one procedure for telephone crossover connections in multisection homes.

WARNING

Careless installation of telephone and cable television lines can cause exposure to live electrical circuits, resulting in severe shock or possible electrocution.

6.7 Continuous Ridge Vent

See Fig. 6.6 on pages 47 & 48.

Figure 6.1 Hinged Roof, Set-up Procedure

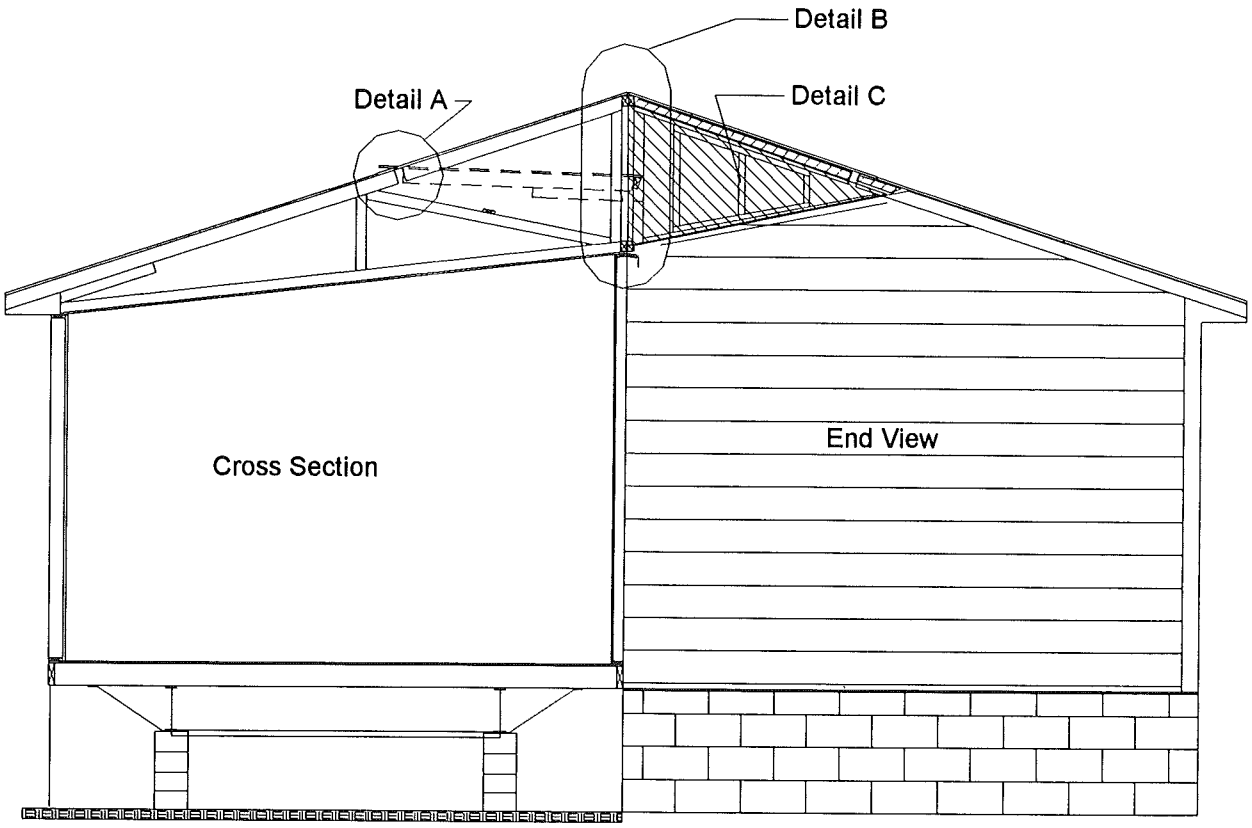

1. Carefully lift (jack) complete hinged roof up to full up-right position, then swing down end vertical and scab as shown in detail B. When all verticals are scabbed remove jacks.

2. Attach roof sheathing to 2 x 4 blocks as shown in detail A and add the missing 1 or 2 rows of shingles per manufacturer's specifications.

3. Install corner braces as shown in detail D.

4. Install end wall fill wedges as shown in detail C and sheath to match end of house.

5. From this point on, the connections are the same as a typical double - section.

6. Furnace/fireplace/wood burning stove/water heater vent stacks must be sized (for length) and installed per manufacturer installation instructions included with home.

7. Plumbing vent pipes must extend through the roof.

FOR DETAILS SEE FOLLOWING PAGE

Figure 6.1 Hinged Roof, Set-up Procedure (Continued.)

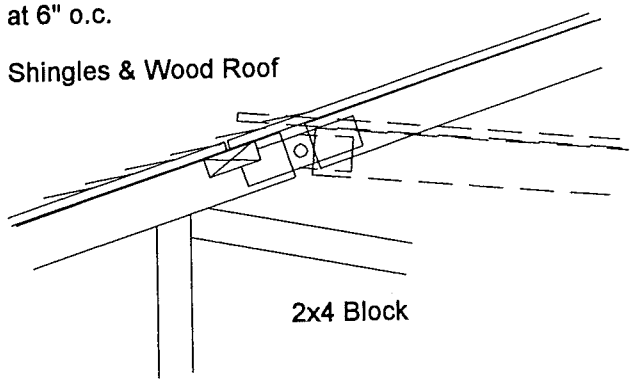

Detail A

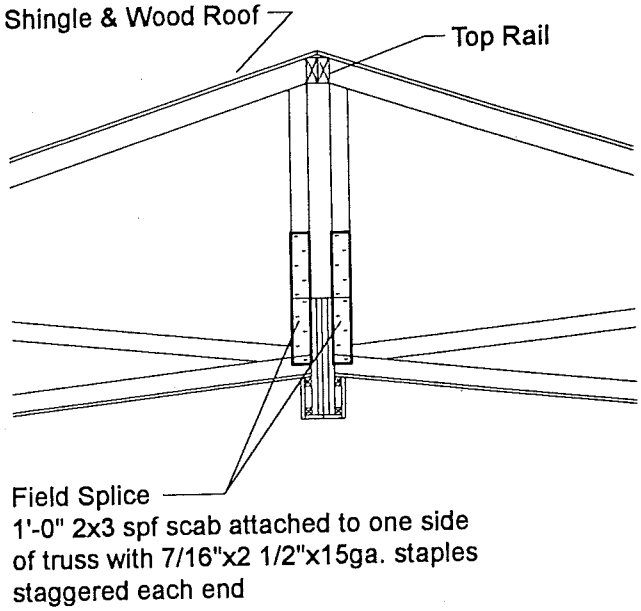

Detail B

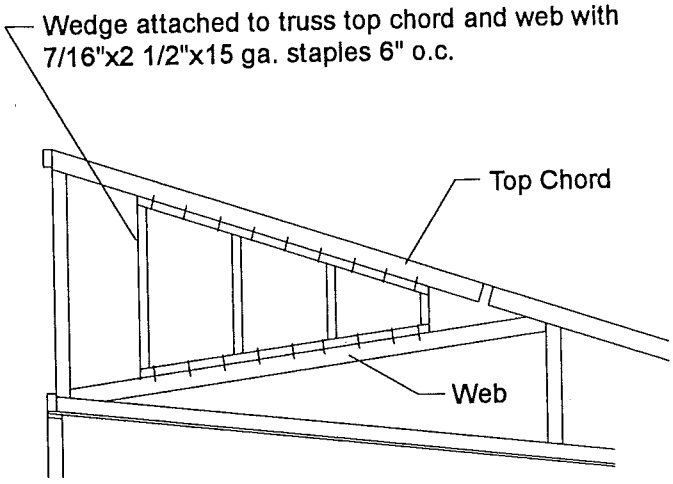

Detail C

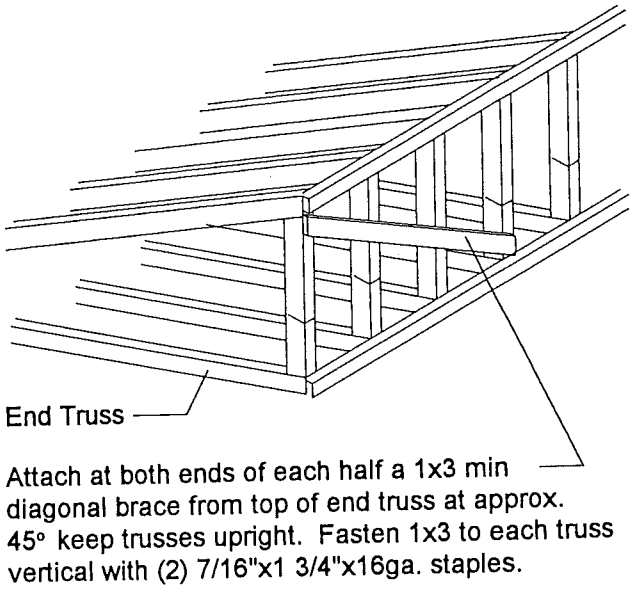

Detail D

Figure 6.3: Paddle Fan Installation

WARNING:
Live Electrical wires. Before installing a paddle fan, make sure that the breaker to the fan wire is off.

1. Remove the fan manufacturer's installation instructions from the package and determine the method of fan attachment to the beam. (Also, see Figure below.)
2. If the center beam (shipped loose) does not contain a precut hole for the electrical box, cut a hole with a hole saw approximately l/4" larger than the box diameter at the proper location (center line of hole should line up with location of supply wire through ceiling) and centered in the width of the beam.
3. Install the box in the hole and secure flange to the center beam with (4) - #6 x 1" screws.
4. a. Insert the ceiling wire through a knock out hole in the side of the electrical box. NOTE: It may be necessary to cut a notch from the top on the supply wire side of the center beam hole to allow the supply wire to be inserted in electrical box without binding against center beam during installation.
   b. Leave approximately 4" of wire free in the box.
5. Secure the center beam in place over the center line joint. Be sure that fan supply wire is not pinched or penetrated with beam fasteners.
6. Secure electrical box to ridge beam with #8x2 1/2" wood screws through the two holes in the top of the box.
7. Strip about 3/4" of insulation from the white and black conductor ends.
8. Position the non-combustible flash ring (provided) over the electrical box so that finished surface (adjacent electric box) which is to be covered by fan canopy is not exposed.
9. Follow the manufacturer's installation instructions for mounting the fan assembly to the box and for electrical wiring of the fan. Use provided electrical connectors for splicing wire. Be certain that fan is grounded as specified in manufacturer's instructions and that wires are connected properly (white-to-white and black-to-black).

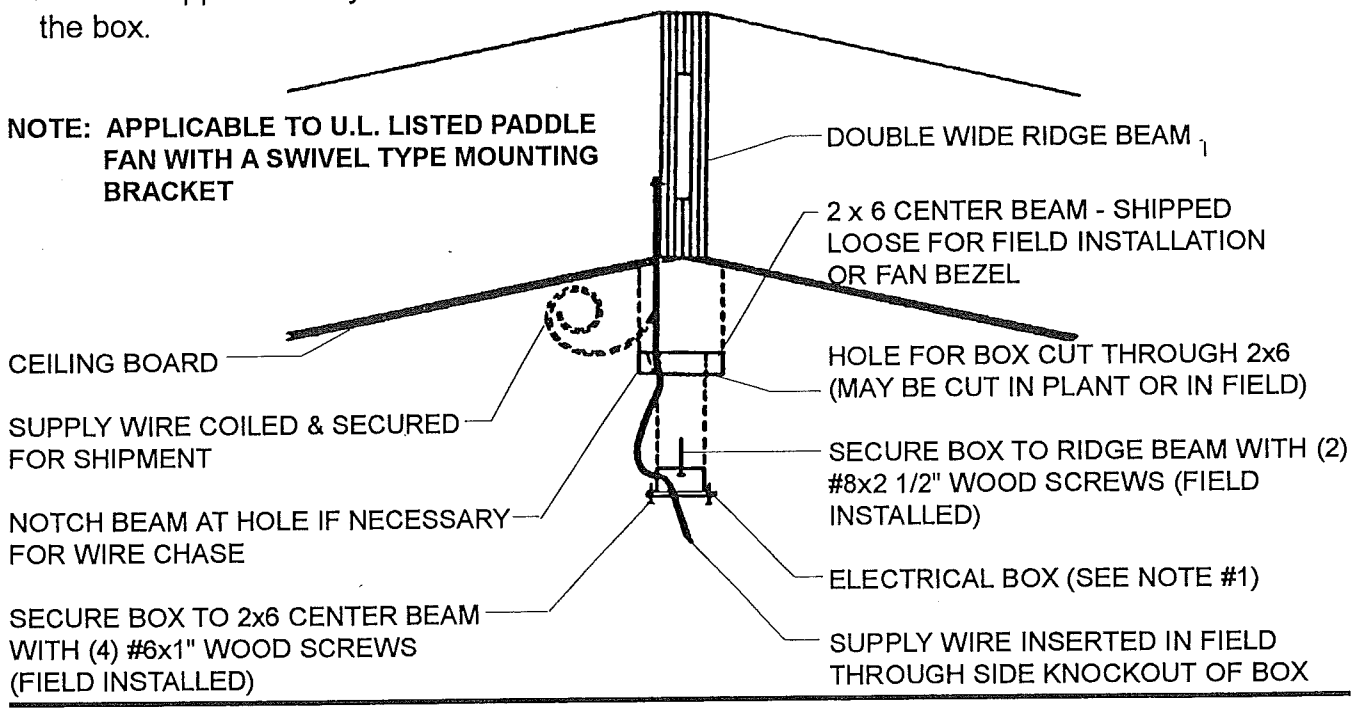

Figure 6.5: Telephone Wiring For Multi-Section Homes

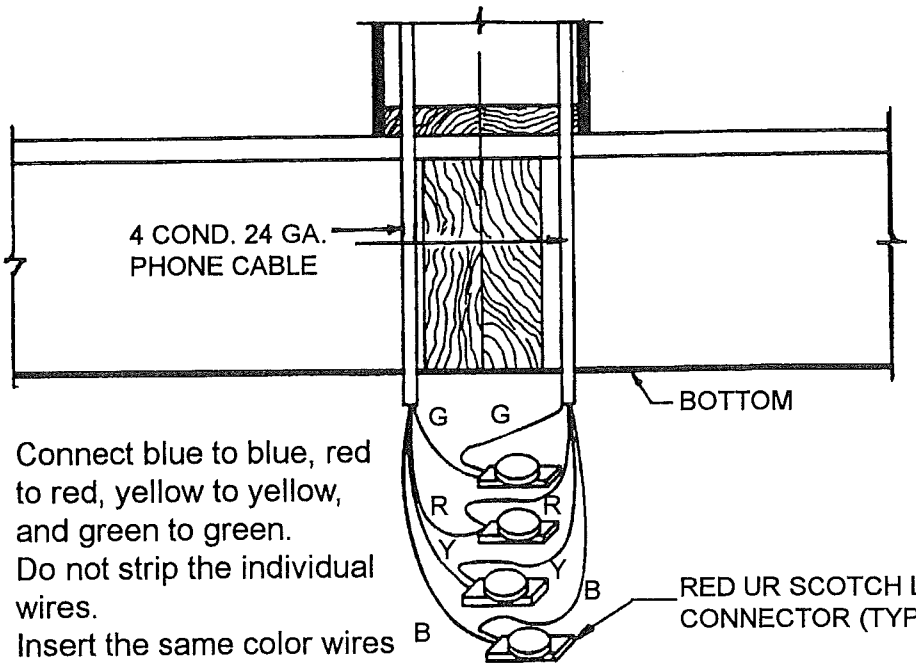

Notes: 1. Connect blue to blue, red to red, yellow to yellow, and green to green.

2. Do not strip the individual wires.

3. Insert the same color wires into the connector, then using channel lock pliers, press the round portion to make the connection.

Figure 6.6: Continuous Ridge Vent

Fasten ridge rail together with 3/8" x 5" lag screws 32" o.c. staggered from section to section for the entire length (Screws must be located at ridge blocking)

Install screws at 45° angle starting 3" from the end and 2 1/2" from center of double section. (Flush heads with roof sheathing).

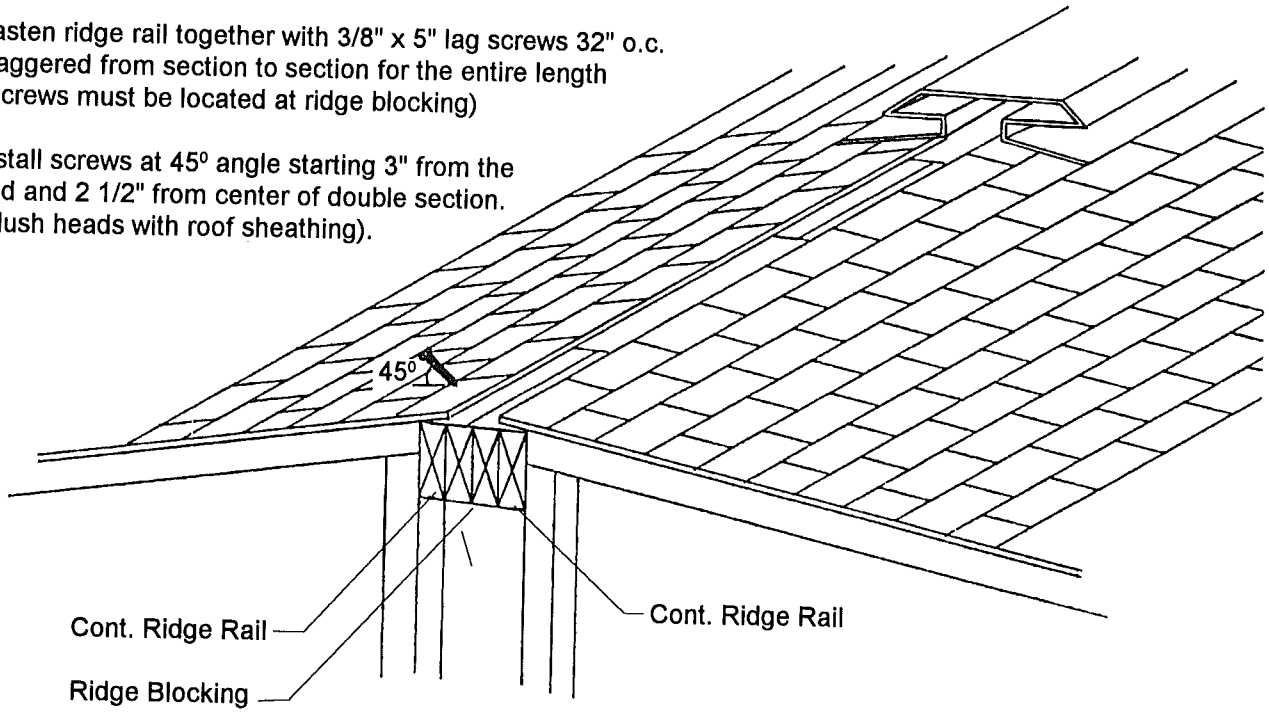

Ridge Vent Installation Instructions

Figure 1

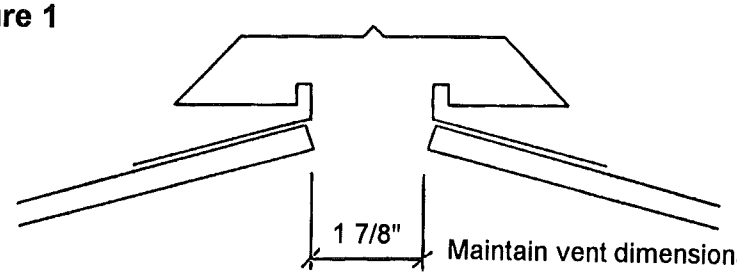

NOTE: Ridge vent may be cut to any length desired.
Center each ridge vent section over slot in roof. Mark edge of ridge vent on roof on both sides at each end.

Maintain vent dimensions at installation.

Figure 2

Insert "connect-or-seal" into end of ridge vent.

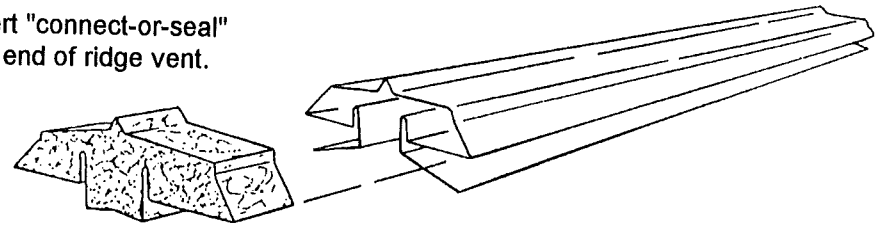

Model No. 656 "connect-or-seal" to be used at each end and as many connections as required.

Figure 3

Apply shingle cap same as std. double section roof connection.

Locate ends of ridge vent 1" min. from edge of roof.

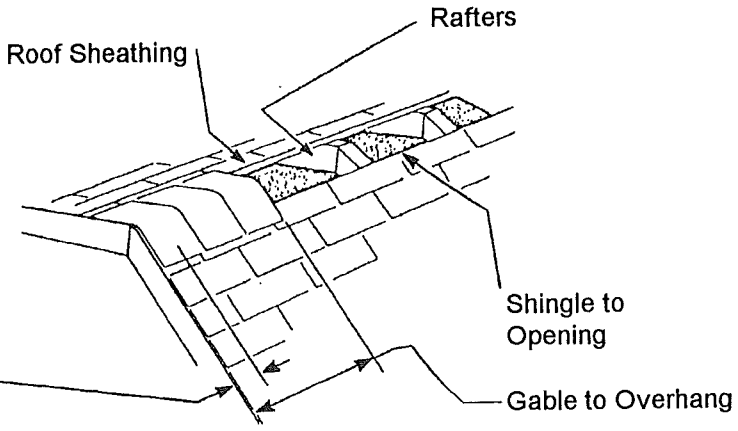

Figure 4

Nail 2 places on sealed end of ridge vent. Nail loosely until opposite end is sealed or adjoining vent is connected. Do not allow vent to "spread open" when nailing in place.

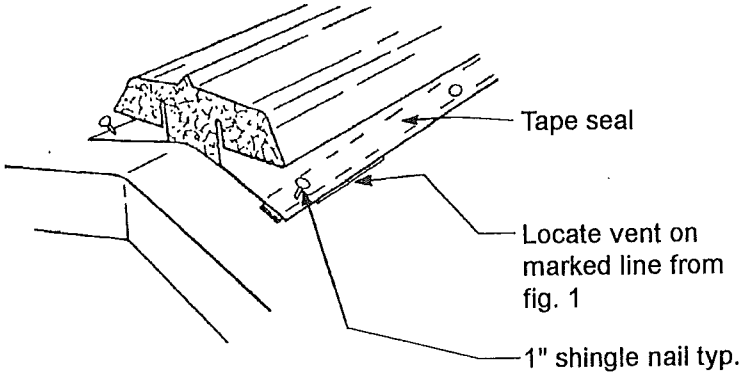

Figure 5

To make ridge vent connection, insert "connect-or-seal" approximately halfway into existing ridge vent. Insert by hand 2 nails into top of "connect-or-seal" to hold in place while an additional section is being added. For all subsequent connections repeat instructions.

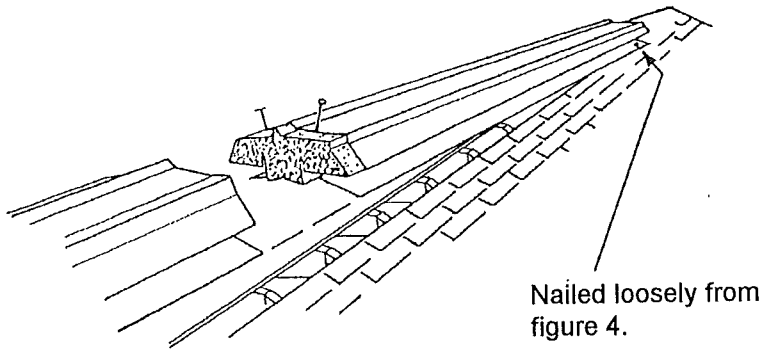

Figure 6

Remove nails from fig. 5 and and butt ridge vents tightly together and seal joint with caulking.

Insert final "connect-or-seal" in remaining open end before nailing down completely with 1" shingle nails.

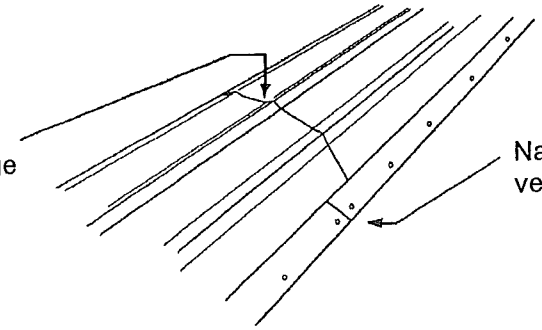

7.1 Clothes dryer vent

Your clothes dryer must exhaust to the exterior of the home, or outside of any perimeter skirting installed around it, through a moisture-lint exhaust system, as shown in Figure 7.1 on page 50.

WARNING

Flammable lint and dust can accumulate from dryer vents. Do not terminate the exhaust underneath the home or in a closed space.

Vent openings are located in either the wall or the floor. After the duct is installed, seal the openings, both inside and outside. Follow the dryer manufacturer's instructions for installing the exhaust system.

If the home did not come equipped with a gas dryer, remember that installing one requires substantial alteration to the home. You must provide gas supply piping and adequate venting as specified by the gas dryer manufacturer. Only a trained and experienced person should install a gas dryer. Cutting major structural elements (such as floor joists) to allow for gas dryer installation is not permissible. Champion is not responsible for any weakening of the home's structural soundness resulting from dryer installation.

7.2 Comfort Cooling systems

Only qualified personnel may install any comfort cooling system not provided with the home. Follow the manufacturer's installation instructions and conform to all local codes.

7.2.1 Air conditioners

The air distribution system of this home has been designed for a central air conditioning system. Equipment you install must not exceed the rating shown on the home's compliance certificate.

The home's electrical distribution panel may contain optional factory-installed circuits (Figure 7.2 on page 51) for air conditioning. The maximum full load ampere draw for the desired air conditioning unit must not exceed 80% of the circuit rating shown.

Existing electrical circuits within the home may not have been sized for the additional load of non-factory-installed air conditioning, and a separate, outside electrical supply may have to be provided.

Any field-installed wiring beyond the junction box must include a fused disconnect located within sight of the condensing unit. The maximum fuse size is marked on the condenser data plate. Local codes will determine the acceptability of the air conditioning equipment, rating, location of disconnect means, fuse type branch circuit protection, and connections to the equipment.

"A" coil air conditioning units must be compatible and listed for use with the furnaces in the home. Follow the air conditioner manufacturer's instructions.

If a remote (self-contained, packaged) air conditioner (cooling coil and blower located outside the home, Figure 7.3 on page 51) is to be connected to the heating supply duct, install an automatic damper between the furnace and the home's air duct system, and another between the remote unit and the home's air duct system. Secure the duct system leading from the remote unit to the home and do not allow it to touch the ground.

Figure 7.1: Dryer Exhaust System

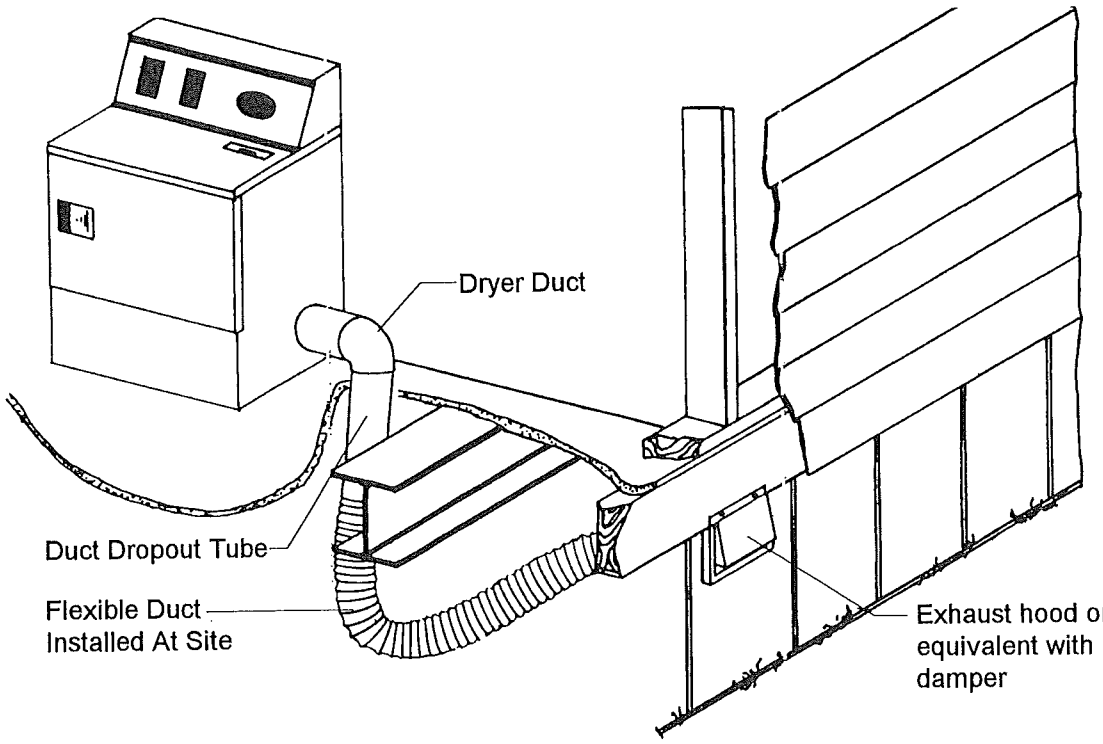

CAUTION: INSTALLATION OF THE EXHAUST SYSTEM MUST BE IN ACCORDANCE WITH THE DRYER MANUFACTURER'S INSTRUCTIONS. ALL COMPONENTS TO BE SUPPLIED BY HOME OWNER.

CAUTION: THIS SYSTEM MUST NOT TERMINATE UNDER THE HOME.

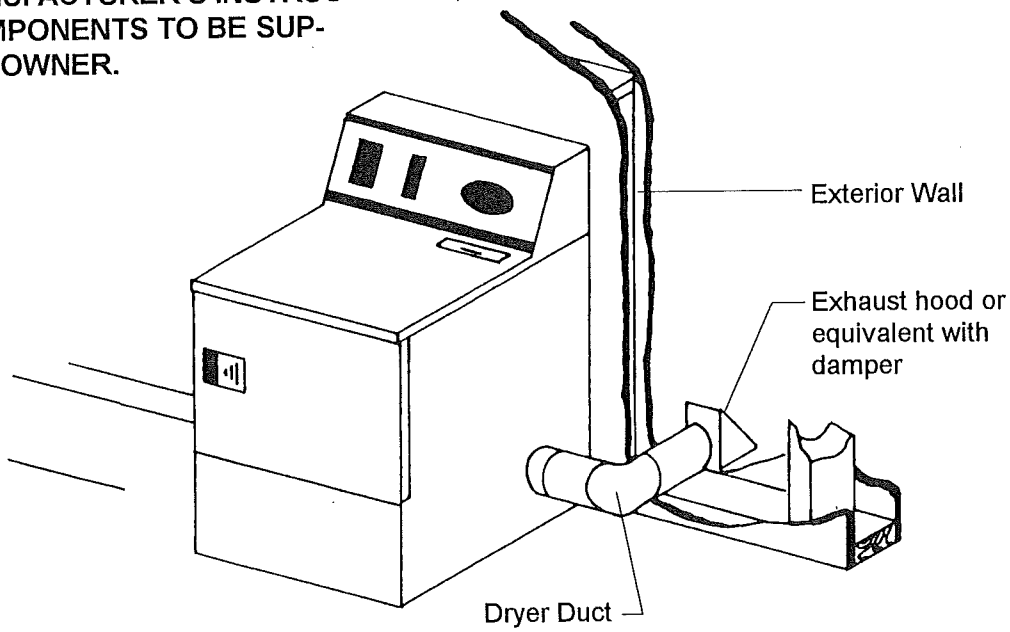

Figure 7.2: Optional Factory-Installed Air Conditioning Circuits

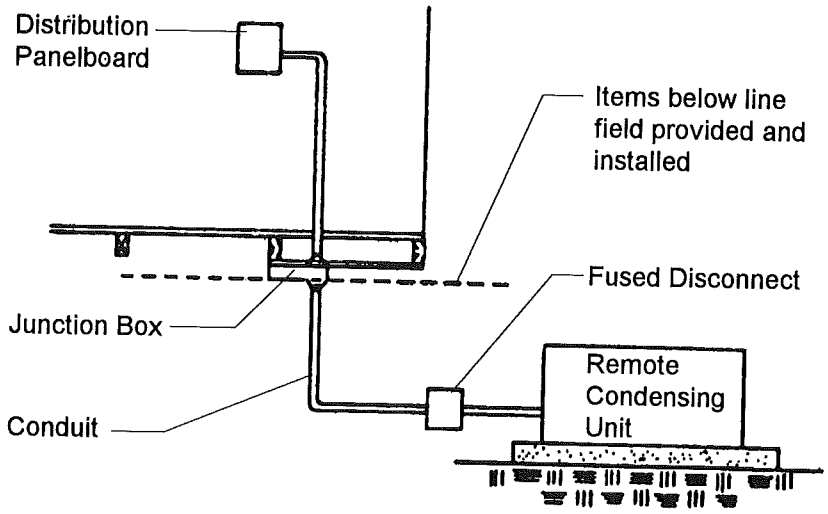

Figure 7.3: Typical Installation of Self-contained Heating or Air Conditioning Equipment

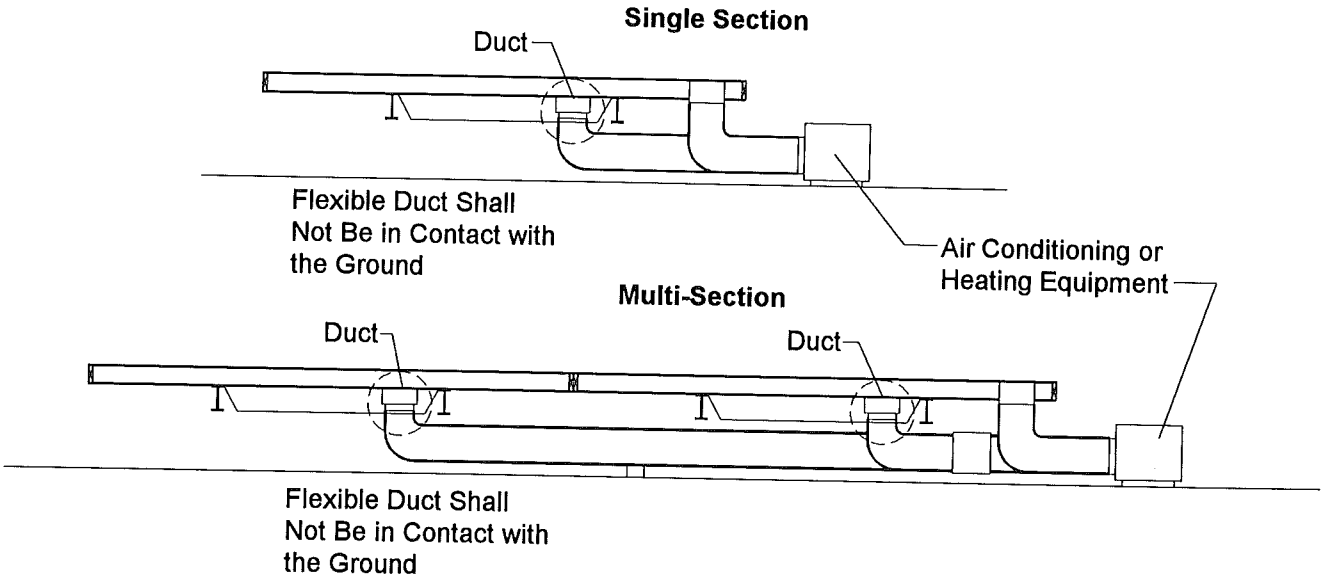

NOTE: Electrical connections made to energize air-conditioning equipment should be made only by qualified personnel. The completed installation must conform to Article 440 of the National Electric Code and applicable local codes. When the electrical connection is made at the junction box, the field installation wiring beyond the junction box must incorporate a disconnect (sized in accordance with NEC Article 440) located within sight of the condesing unit.

The acceptibility of all air-conditioning equipment and its installation are to be determined by the local inspection authorities.

Insulate ducts with material of thermal resistance (R) not less than 4, and a perm rating of not more than 1 perm. Connect the duct carrying air to the home to the main duct at a point where there are approximately as many registers forward of the connection as there are to the rear. Locate the return air duct in the center of the home.

Do not cut or damage floor joists. Return air and supply ducts should be sized to fit between floor joists. Replace insulation removed during the installation, and seal the bottom board around the duct connection.

Direct all condensation runoff away from the home by connecting a hose to the equipment runoff outlet or other means specified by the equipment manufacturer.

7.2.2 Heat Pumps

Install heat pumps according to the heat pump manufacturer's instructions.

7.2.3 Evaporative coolers

Install a roof-mounted cooler following the manufacturer's instructions. In the absence of the instructions, proceed as follows:

Connect the wires from the roof- mounted junction box following the color code scheme of Figure 7.4 below using wire nuts, and replace the cover on the box.

Check to be sure a rigid base has been provided to evenly distribute the cooler's weight over several trusses. Tightly seal all roof penetrations and the boot connecting the cooler to the--roof/ceiling opening to prevent leakage of water into, and cool air out of, the home.

Figure 7.4: Electrical Connection for Evaporate Cooler

NOTE: COOLERS RATED AT 16 AMPS TO BE INSTALLED ON A 20 AMP CIRCUIT. COOLERS RATED AT 12 AMPS TO BE INSTALLED ON A 15-AMP CIRCUIT.

NOTE: ONE REQUIRED FOR EACH COOLER.

COLOR CODE

White ..... Neutral
Yellow ..... Pump
Black..... Low Fan
Red ..... High Fan
Green..... Ground

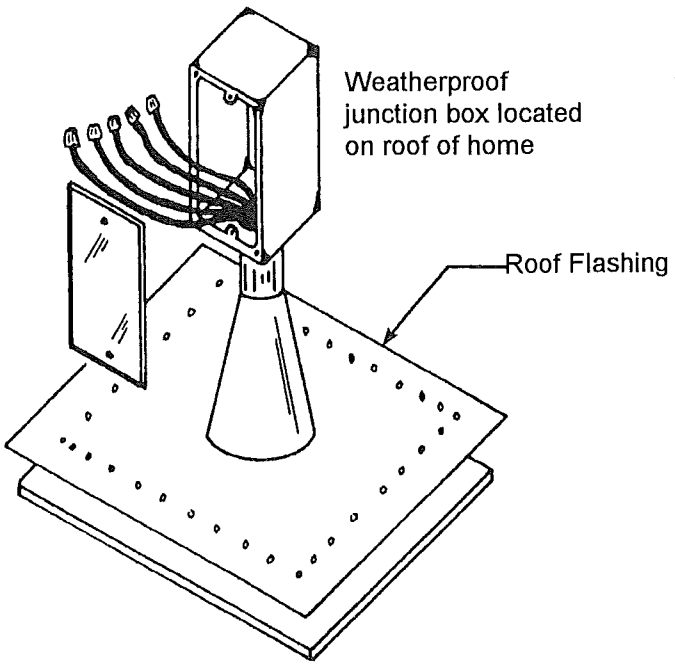

Connect the cooler to an external water supply and attach an overflow hose to its accumulation pan to route overflow water away from the home.

Champion suggests installing an insulated lightning protector, grounded directly to earth.

Champion recommends roof or window mounted evaporative coolers only.

7.3 Fireplace and wood stove chimneys and air inlets

Fireplaces and wood stoves require on-site installation of additional section(s) of approved, listed chimney pipe, a spark arrestor and a rain cap assembly. See Figure 7.5 on page 54.

7.3.1 Minimum extensions above roof

To assure sufficient draft for proper operation, extend the finished chimney at least 3' above the highest point where it penetrates the roof and at least 2' higher than any building or other obstruction located within a horizontal distance of 10'. If the site has obstructions extending higher than the home's peak within 10' of the chimney, the installer may have to provide an additional section of chimney pipe if required by local codes.

7.3.2 Required components

The required components of a correctly-installed chimney are as shown in Figure 7.5 on page 54.

7.3.3 Assembly and sealing sequence

Assemble and seal your fireplace or wood stove chimney per the fireplace manufacturers instructions. Avoid cutting any roof trusses or floor joists when installing chimney pipes or combustion air intakes.

7.3.4 Combustion air duct inlets

Combustion air intake ducts end just below the bottom covering of the floor. You must extend them to the outside when your home has a basement or crawl space. In addition extend heat pump intakes to outside. These added ducts are not supplied, and may be purchased at your local hardware store. The fireplace manufacturer's instructions for installing combustion air ducts are in the fireplace/stove or with the chimney parts. Do not allow the combustion air inlet to drop material from the hearth beneath the home. Locate its inlet damper above expected snow level, as shown in Figure 7.5 on page 54.

7.4 Range, cooktop and oven venting

If your home is equipped with a combination range (cook-top)/grill or oven that contains its own exhaust system, route the exhaust so that it does not exit under the home. Connect flexible metallic duct between the elbow protruding from the floor and the termination fitting, and support it according to the manufacturer's installation instructions.

Figure 7.5: Fireplace or Wood Stove Chimney and Air Intake Installation

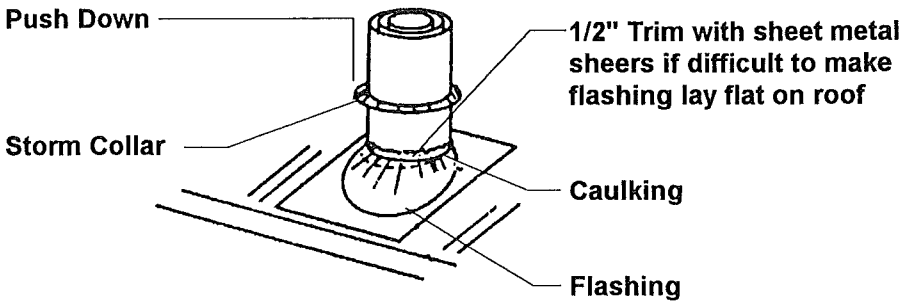

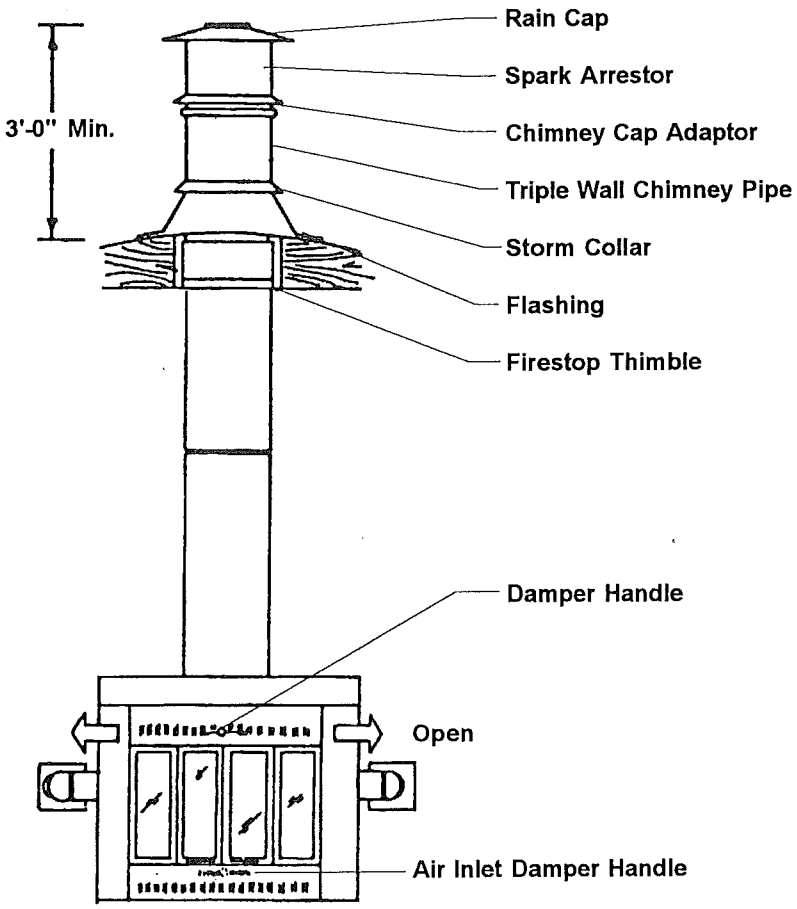

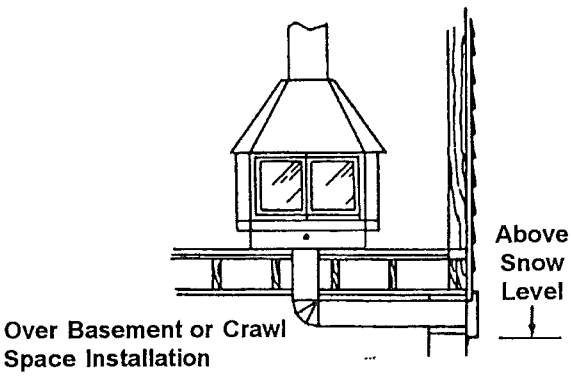

8.1 Proper procedures

Consult local, county or state authorities before connecting any utilities. Only qualified service personnel, familiar with local codes and licensed where required, should make utility connections and conduct tests.

8.2 Water supply

8.2.1 Maximum supply pressure and reduction

The water systems of your home were designed for a maximum inlet pressure of 80 psi. If the local water supply pressure exceeds 80 psi, install a pressure reducing valve.

8.2.2 Connection procedures

8.2.2.1 To supply mains

Connect the home's water system to the water source through the inlet located under the house, usually below the water heater compartment. A tag on the side of the home marks its location.

8.2.2.2 Mandatory shut-off valve

You must install an accessible shut-off valve between the water supply and the inlet, as shown in Figure 8.1 on page 56. It must be a full flow gate or ball valve.

8.2.2.3 Crossovers

Multisection homes with plumbing in both sections require water line cross connections, similar to Figure 8.2 on page 56. Remove the shipping caps from the water lines and install the crossover connectors provided with the home. If freezing can occur, wrap water connectors with insulation.

8.2.3 Freezing protection

8.2.3.1 Necessity

In areas subject to subfreezing temperatures, protect exposed sections of water supply piping, shut-off valves and pressure reducers, and pipes in water heater compartments with uninsulated doors, from freezing. Otherwise, costly damage may result.

8.2.3.2 Use of Heat tapes

Heat tapes (either automatic or nonautomatic) can protect exposed plumbing from freezing.

WARNING

Improperly designed or installed heat tapes can cause fire. Use only heat tapes listed by a recognized laboratory for use with manufactured homes, and install them in accordance with the manufacturer's instructions.

Champion recommends use of heat tapes with a 10 amp integral fuse. Plug the 3-wire, grounded cordset of the heat tape into the outlet located under the home near the water supply. (Figure 8.1 on page 56).

8.2.3.2.1 Automatic Heat Tape

This tape (with a thermostat) is approved for installation on all types of water pipe, including plastic. Secure it to the pipe, insulate it and weatherproof it, according to the manufacturer's instructions.

8.2.3.2.2 Non-Automatic Heat Tape

This tape (without a thermostat), may not be approved for plastic pipe unless it is left exposed with no outer wrap of insulation. Installation is otherwise the same as with automatic heat tape.

Figure 8.1: Typical Water Connection

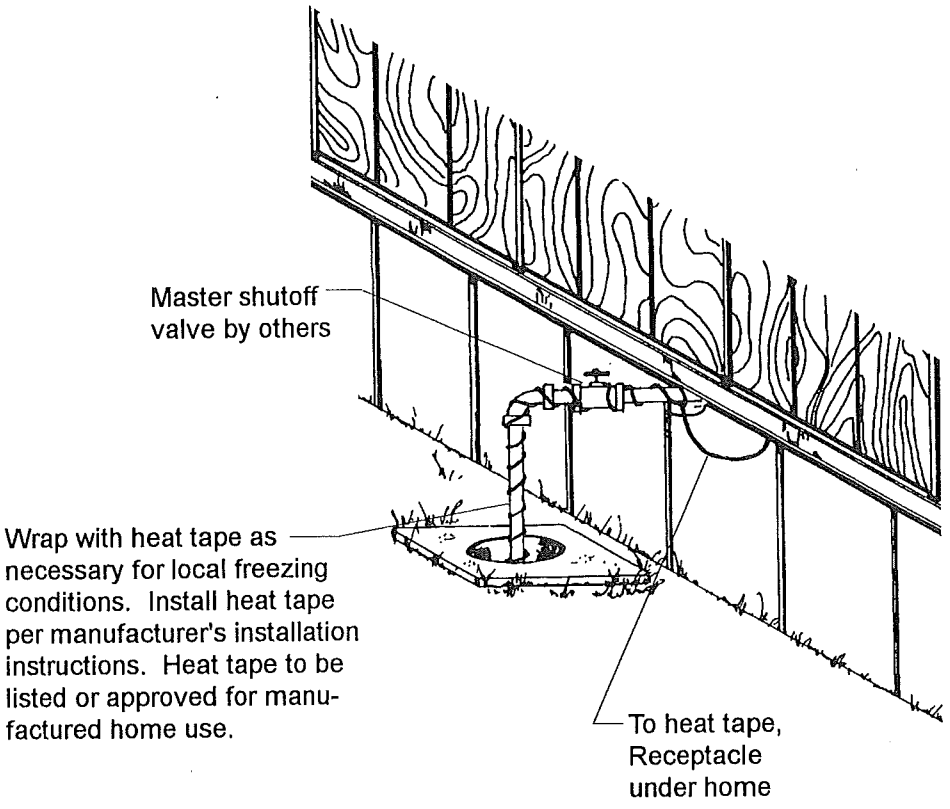

Figure 8.2: Typical Water Line Crossover

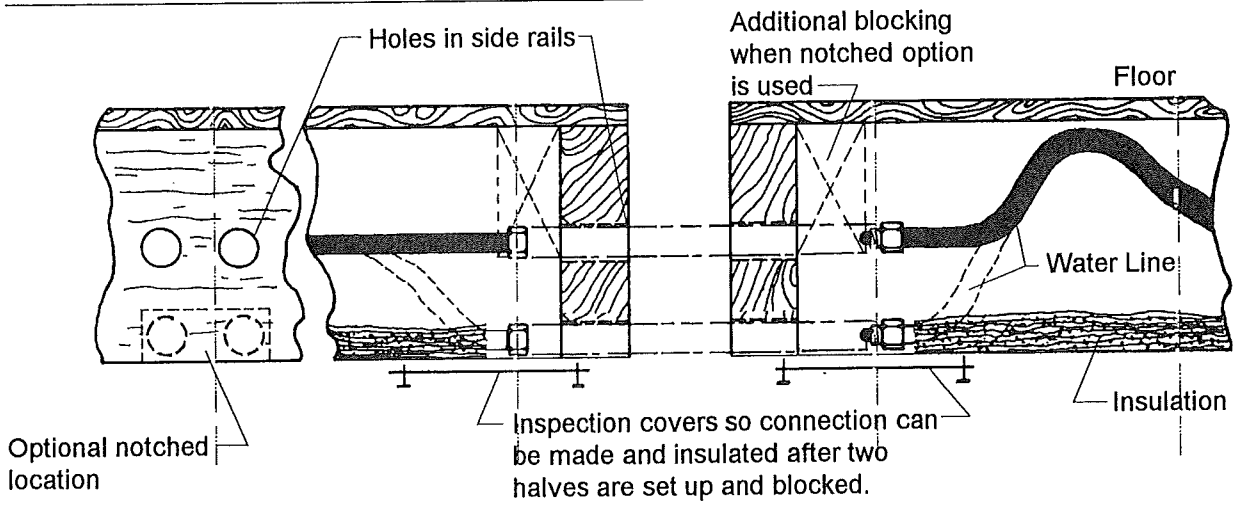

CAUTION: IF FREEZING CONDITIONS EXIST, WRAP WATER CONNECTOR WITH INSULATION. USE WATER CONNECTORS SUPPLIED BY MANUFACTURER WHERE APPLICABLE.

8.2.3.3 Freezing Protection for Unoccupied Homes

If the home is to be left unheated in cold weather, drain the water lines and blow them clear with compressed air to prevent damage from freezing.

8.2.4 Testing procedures

Even though the water system was tested at the factory, it must be rechecked for leaks at the installation site. Close all water faucets, spigots and stool tank float valves, and use one of the following procedures:

8.2.4.1 Hydrostatic

Be sure the water heater tank is full of water. Pressurize the system with water at 100 psi, and then isolate it from the pressure source. The system must hold this pressure for at least 15 minutes without any loss. If the pressure falls off, repressurize the system and locate and correct leaks.

8.2.4.2 Pneumatic

CAUTION: IF THIS PROCEDURE IS USED, YOU MUST BYPASS THE HOT WATER TANK BY HOOKING ITS COLD INLET AND HOT OUTLET LINES TOGETHER. THIS PROCEDURE WILL PROTECT THE APPLIANCE FROM DAMAGE AND PROTECT THOSE INVOLVED IN THE TEST FROM POSSIBLE INJURY. Connect an air pump and pressure gauge to the water inlet and pressurize the system to 100 psi. Isolate the pressure source from the system. The gauge must stand for at least 15 minutes with no drop in pressure. Correct any leaks indicated by bubbles from soapy water, repeating the procedure until all have been eliminated. Reconnect the water heater and the water supply.

8.3 Drainage System

8.3.1 Assembly and support

If portions of the drainage system were not installed at the factory, all materials required to complete it have been shipped as loose items in the home. Assemble the drainage system according to codes and Figures 8.3 through 8.6. Start at the most remote end and work toward the outlet, supporting the piping with temporary blocking to achieve the proper slope (see Section 8.3.2). When the entire system has been completed, install permanent drain line supports at 4' on center, as shown in Figure 8.3 on page 58.

8.3.2 Proper slopes and connector sizes

Drain lines must slope at least 1/4" fall per foot of run (see Figure 8.4 on page 58). Connect the main drain line to the site sewer hookup using an approved elastomer coupler (Figure 8.5 on page 59). Exception: 1/8" fall per foot is allowed when a cleanout is installed at the upper end of the run.

8.3.3 Crossovers

Connect multisection home drainage line crossovers as shown in Figure 8.4 on page 58.

8.3.4 Solvent welding procedures

The solvent cement used to connect drain lines must be compatible with the pipe installed in the home. Follow the manufacturer's instructions on the container.

8.3.5 Protection from Freezing

Champion Home Builders Co. has insulated fittings in the drainage system subject to freezing, such as P-traps in the floor. Replace this insulation if removed during assembly or testing. Insulate drain lines in-

Figure 8.3: Drainpipe Support Methods

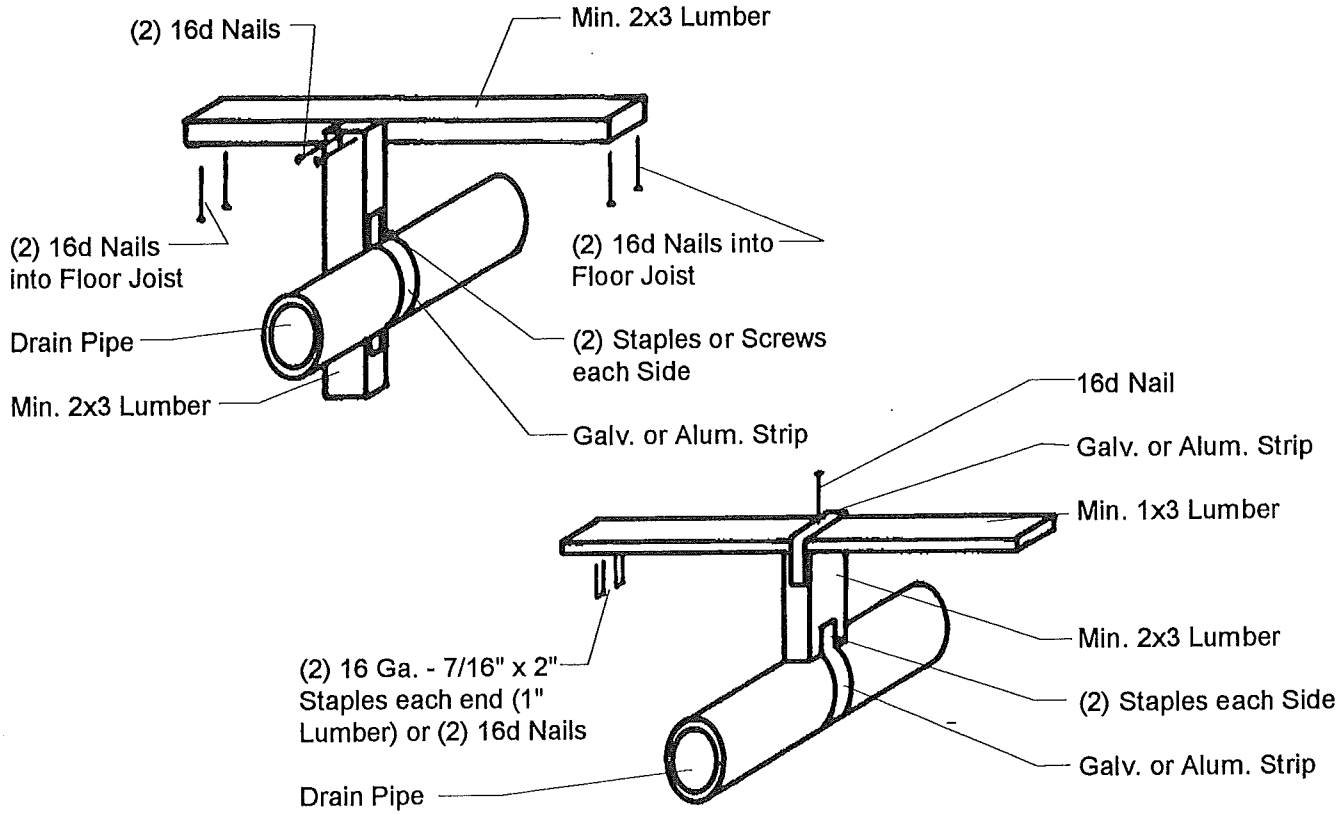

Figure 8.4: Drainpipe Crossovers, Slopes and Connections

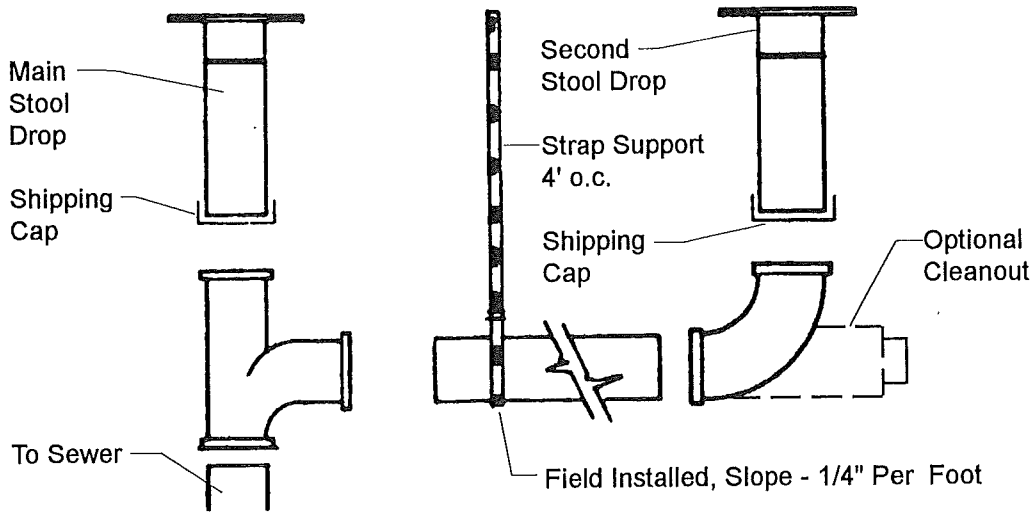

Figure 8.5: Connection to Site Sewer

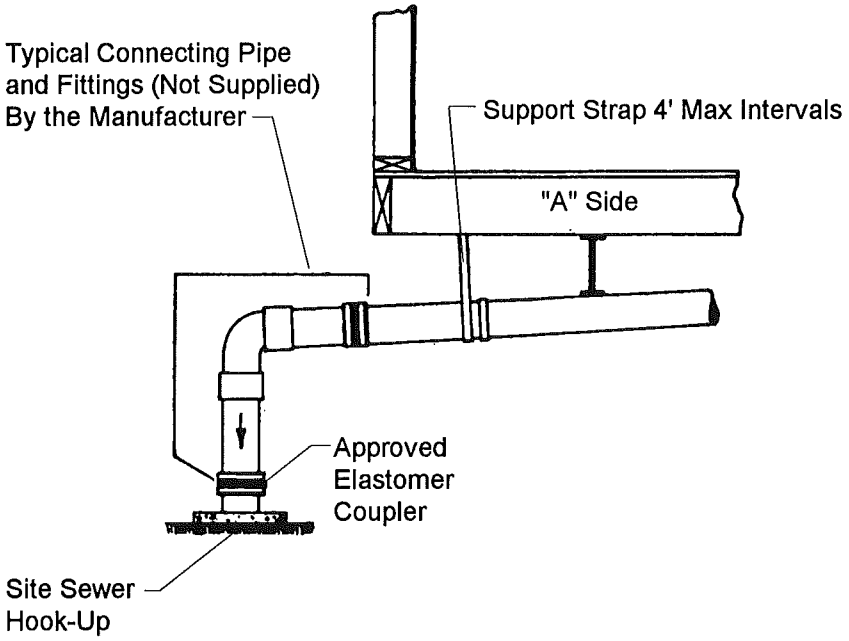

NOTE: FITTINGS IN THE DRAINAGE SYSTEM SUBJECT TO FREEZING, SUCH AS P-TRAPS IN THE FLOOR, HAVE BEEN PROTECTED WITH INSULATION BY THE MANUFACTURER. INSULATION MUST BE REPLACED IF REMOVED FOR ACCESS TO THE P-TRAP.

Figure 8.6: Drain Line Freeze Protection

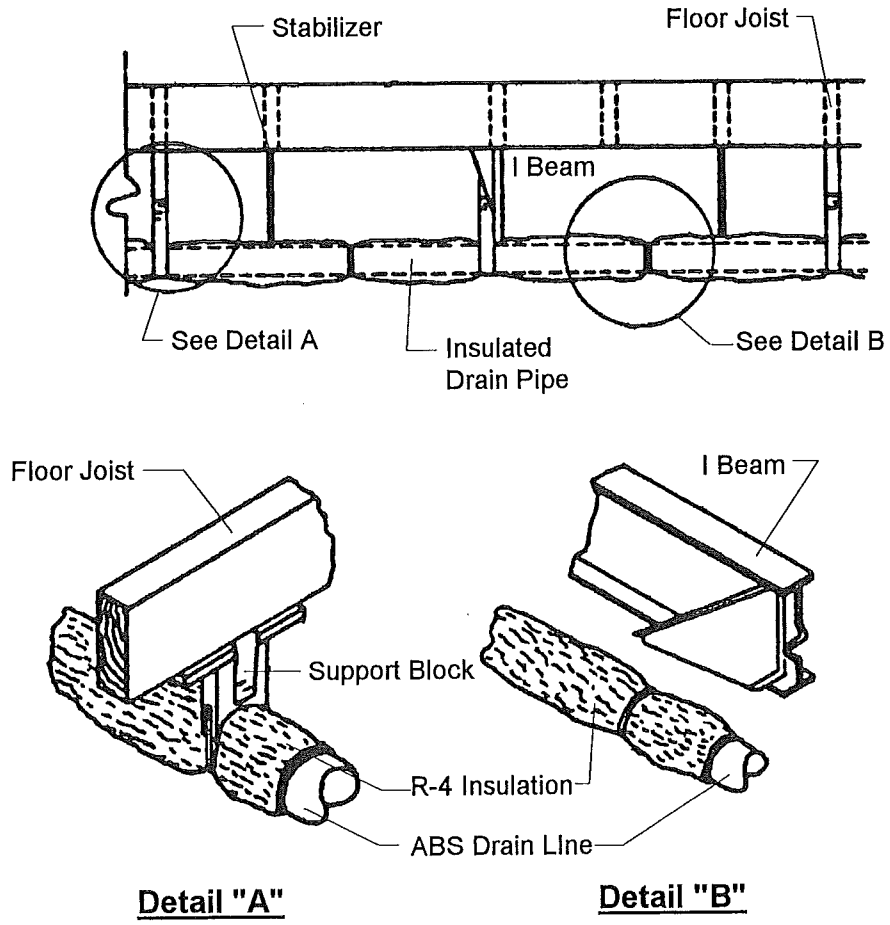

Figure 8.7: Typical Gas Line Crossover

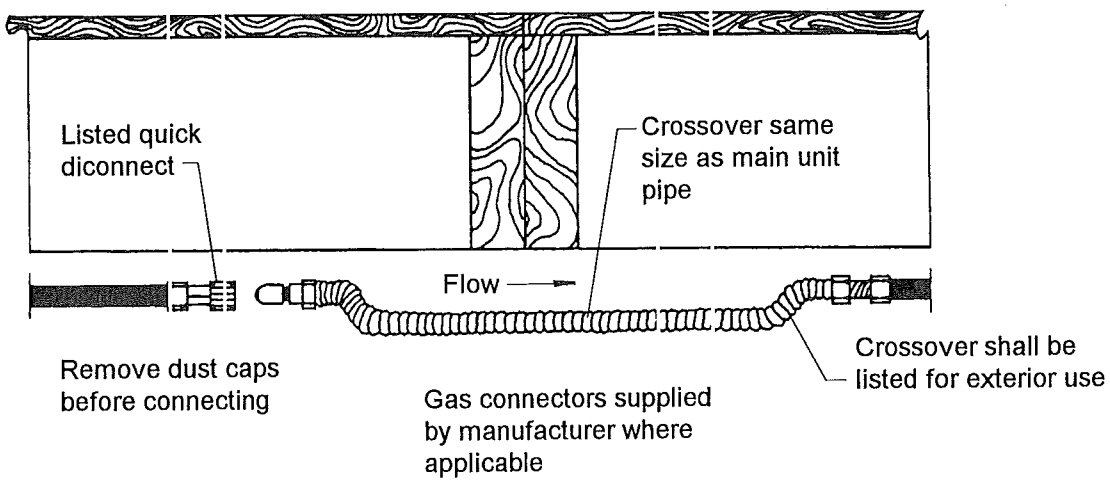

stalled below the bottom board in areas subject to freezing as shown in Figure 8.6 on page 60. If the home is to be left unheated in cold weather, pour an approved nontoxic antifreeze into P-traps at all fixtures and stools.

8.3.6 Flood level test procedure

You must conduct a flood level test on the completed drainage system before connecting it to the site sewer. With the home in a level position, all fixtures connected, and all tub and shower drains plugged, connect the drainage piping system to the site water inlet and fill the system with water to the rim of the toilet bowl. Release all trapped air. Allow the system to stand for at least 15 minutes. Check for leaks. Drain the system. Plug all fixtures, sinks, showers and tubs, and fill with water. Release the water in each fixture simultaneously to obtain the maximum possible flow in the drain piping. Check all P-traps and the drain system for possible leaks. Repair any leaks and retest.

8.4 Gas supply

WARNING

Improperly connected or modified fuel gas systems can cause fire or explosion. All connections to and alterations of fuel gas systems, including installation of appliances, must be done by qualified personnel.

8.4.1 Type of gas system furnished with home

All gas appliances in this home, including the heating system, are equipped for natural gas. If LP gas is to be used as the gas supply instead, a qualified service person must convert the appliances to LP gas following the instructions provided by each appliance manufacturer.

8.4.2 Proper supply pressure

THE GAS PIPING SYSTEM IN THE HOME HAS BEEN DESIGNED FOR A PRESSURE NOT TO EXCEED 14" OF WATER COLUMN (8 0Z.) IF GAS FROM ANY SUPPLY SOURCE MAY EXCEED THIS PRESSURE, INSTALL A PRESSURE REDUCING VALVE. To operate gas appliances safely and efficiently, do not exceed the design pressure limitations. For natural gas systems, the incoming gas pressure should remain between 6" and 8" of water column. For LPG systems, the pressure should remain between 12" and 14" of water column.

8.4.3 Orificing for specific gases

SPECIAL ORIFICES AND REGULATORS ARE REQUIRED FOR EACH KIND OF GAS AND AT ALTITUDES ABOVE 3,000 FEET. SEE THE INSTRUCTIONS ACCOMPANYING EACH GAS-BURNING APPLIANCE FOR MODIFICATION INSTRUCTIONS. BEFORE MAKING ANY CONNECTIONS TO THE SITE SUPPLY, CHECK THE INLET ORIFICES OF ALL GAS APPLIANCES TO ENSURE THEY ARE CORRECTLY SET UP FOR THE TYPE OF GAS TO BE SUPPLIED.

8.4.4 Crossovers

Install the gas line crossover in multisection homes as shown in Figure 8.7, on page 60, before performing any system tests or connecting the system to the gas supply. All crossovers and fittings must be listed for manufactured housing exterior use and be the same size as the main unit pipe. Do not use tools to connect or remove the flexible connector quick disconnect.

8.4.5 Testing prior to connection to mains

Even though the gas system was tested at the factory, it is essential that it be re-checked for leaks at the site. **DO NOT APPLY PRESSURE IN EXCESS OF THOSE SPECIFIED BELOW OR YOU MAY DAMAGE GAS VALVES AND/OR PRESSURE REGULATORS.** Conduct one of the following two tests when the air and piping temperatures are nearly equal and will remain stable.

8.4.5.1 Piping Only Test

Close all appliance shut-off valves. Attach a pressure gauge calibrated in ounces at the home gas inlet. Pressurize the system with air to at least 3 psi (48 oz.). Isolate the pressure source from the system. The gauge must stand for at least 10 minutes with no drop in pressure. If any pressure loss occurs, check all joints in the piping system and at all shut-off valves with soapy water or bubble solution until the leaks are located. **DO NOT BUBBLE CHECK WITH SOLUTIONS CONTAINING AMMONIA.** Repair the leaks and retest until the pressure holds.

8.4.5.2 Test of Entire System

Close all gas equipment controls and pilot light valves according to the individual gas equipment manufacturer's instructions. Assure that gas shut-off valves for all gas equipment are in the OPEN position. Attach a pressure gauge calibrated in ounces at the home gas inlet. Pressurize the system with air to at least 6 oz. but less than 8 oz. Check all gas shut-off valves and flex line connections to valves and appliances for leaks, using soapy water or bubble solution. **DO NOT BUBBLE CHECK WITH SOLUTIONS CONTAINING AMMONIA.** Repair any leaks found, and retest. Close all equipment shut-off valves upon completion of testing.

8.4.6 Connection procedures

Inspect gas appliance vents to ensure they have been connected to the appliance, and make sure that roof jacks are installed and have not come loose during transit. Have the gas system connected to the gas supply only by an authorized representative of the gas company.

8.4.7 Gas appliance start-up procedures

One at a time, open each equipment shut-off valve, light pilots and adjust burners according to each appliance manufacturer's instructions. MAKE SURE THE WATER HEATER IS FILLED WITH WATER BEFORE LIGHTING ITS PILOT. Check the operation of the furnace and water heater thermostats and set them to the desired temperatures. To help prevent scalding, set the water heater no higher than 120 F.

8.5 Heating oil systems

Homes equipped with oil burning furnaces must have their oil supply tank and piping installed on site. These items are not supplied by Champion. Consult the oil furnace manufacturer's instructions for proper pipe sizing and installation procedures. **ALL OIL STORAGE TANK AND PIPING INSTALLATIONS MUST MEET ALL APPLICABLE LOCAL REGULATIONS AND SHOULD BE MADE ONLY BY EXPERIENCED, QUALIFIED PERSONNEL.** Oil piping and materials completed on site shall be new and free from defects. The piping and materials shall have a melting point greater than 1450 degrees f. The steel, wrought iron, threaded copper, brass copper tubing or steel tubing must conform to applicable standards. Piping shall be sized in accordance with 24 CFR 3280. 706 (c). and constructed with joints con-

forming to 3280. 706 (d) through (g). The piping must also be graded to eliminate air locks and it must be supported 4' on center and secured within 6" of the supply connections. The entire system shall be tested for leakage.

8.5.1 Tank installation requirements

Unless the home is installed in a community with a centralized oil distribution system, you must install an oil storage tank outside the home. Locate the tank where it is accessible for service and supply and safe from fire and other hazards.

8.5.1.1 Vaporizing (gravity-feed) furnaces

Install oil tanks that feed vaporizing-type oil furnaces so that oil flows freely by gravity. To achieve efficient gravity flow, install the tank so that its bottom is at least 8" above the level of the furnace's oil control and its top is within 8' of the oil control level.

8.5.1.2 Gun (pump-fed) furnaces

Since the furnace includes a fuel pump, the tank may be installed above or below ground. For tanks installed below ground, do not exceed the lifting capacity of the pump, and extend the filler neck 1' above grade and provide a 1-1/4" dia. minimum vent pipe extending at least 2' above grade.

8.5.1.3 Sloping and draining requirements

Regardless of the type of oil furnace or the tank location, install the tank to provide a gradual slope toward the fill end or drain plug (if so equipped). This facilitates pumping or draining of water or sludge.

8.5.2 Shut-off valve and fuel line filter

Install an accessible and approved manually-operated shut-off valve at the oil tank outlet. Champion also recommends installing a suitable filter in the fuel line near the tank to trap dirt and water.

8.5.3 Leak test procedure

Before operating the system, check for leaks in the tank and supply piping. Fill the tank to capacity with fuel and examine all joints in the system for leakage.

8.5.4 Winterizing

Champion recommended using a fuel oil winterized to prevent the oil from jelling at low temperatures.

8.5.5 Hot Water Base Board Heat

All crossovers to be made with sweat fittings, copper unions or other approved metal connections.

8.6 Electricity

WARNING

Improperly connected or modified electrical systems can result in fire or injury from electrical shock. All connections to or modification of the home's electrical system, including installation of electric appliances, must be made by qualified personnel.

A large enough power supply must be available at the site. An inadequate power supply may result in improper operation of, and possible damage to, motors and appliances. It may also increase your electricity costs. The current rating in amperes of your home can be found on the tag located outside next to the feeder or service entrance and also on the electrical distribution panel.

8.6.1 Description and rating of house wiring

The home is designed for connection to an electrical wiring system rated at 120/240 volt AC. **PROPER AND SAFE CONNECTION DEPENDS ON THE TYPE OF SUPPLY SYSTEM THE HOME IS EQUIPPED WITH**. The connection to this home may be a feeder requiring wiring at the site, or the connection to this home may be a service equipment meter base. The following paragraphs describe the wiring and grounding of electrical feeders; if the home is equipped with a service equipment meter base, skip directly to Section 8.6.4.4.

8.6.2 Proper feeder wire and junction box material and size

The main breaker and the label on the electrical distribution panel give the feeder current capacity in amperes. Using this information, determine the required feeder size from the following tables. These sizes are based on an ambient temperature of 86°F. and do not take voltage drop into consideration.

8.6.2.1 Overhead Feeders

Homes equipped with overhead (mast weatherhead) feeder entrances contain all necessary conduit to the electrical distribution panel. However, you must install feeder conductors (not provided) on site. Refer to Fig. 8.8 on page 68.

8.6.2.2 Underground feeders

Homes with an under-the-floor entrance come with a permanently-attached conduit raceway that runs from the electrical distribution panel to a point under the floor. Install an approved conduit fitting or junction box at the termination point. Refer to Figure 8.9 on page 68.

8.6.3 Grounding of homes with feeder connections

8.6.3.1 Necessity

The home must be grounded properly to protect the occupants. The only safe and approved method of grounding your feeder-connected home is through the grounding bar in the electrical distribution panel. This bar grounds all noncurrent carrying metal parts of the electrical system at a single point.

8.6.3.2 Procedure

The ground conductor of the power supply feeder cable connects the grounding bar to a good electrical ground. The grounding electrode should be an 8' length of 1/2" dia. copper rod or 3/4" galvanized steel pipe. Drive it into the ground at least 12" below the surface and 2-1/2'-deep trench. Connect the grounding electrode with a grounding clamp.

Insulate the grounded circuit conductor (neutral or white wire) from the grounding conductors (green wires) and from equipment enclosures and other grounded parts. Insulate neutral circuit terminals in the distribution panel board, ranges, clothes dryers, and counter-mounted cooking units from the equipment enclosure. Bonding screws, straps or buses in the distribution panel board or in appliances should have been removed and discarded at the manufacturing facility.

You must provide the required continuity of ground between sections of multisection homes. This bonding connection is commonly made with a #8 AWG bare copper wire or other approved positive connection between the parts (Figure 8.10 on page 69), using approved grounding lugs with bolts, star washers and nuts, or self-tapping screws that are shipped with the home.

8.6.3.3 Unacceptable methods of grounding homes

Grounding to a water pipe, through the home's hitch caster will not satisfy the important grounding requirement. ***Never*** use the neutral conductor of the feeder cable as a ground wire. Do not ground the neutral bar in the electrical distribution panel.

8.6.4. Connection methods

Connections should be made only by a qualified electrician using one of the following methods:

8.6.4.1 30 A feeder cord

The home may be equipped with a permanently-connected 30 amp. feeder cord stored in a compartment under the floor. If so, it is ready to be plugged into a 30 amp., 2-pole, 3-wire, 120 volt grounding service receptacle after electrical tests have been completed (see Section 8.6.6). **MANY HOMES ARE EQUIPPED FOR 100 AMP. OR GREATER SERVICE. UNLESS THIS HOME IS EQUIPPED FOR ONLY 30 AMP SERVICE, DO NOT ATTEMPT TO USE A FEEDER CORD OR 'PIGTAIL' CONNECTION.** Connect homes equipped for 100 amp or greater service by one of the three following methods:

8.6.4.2 Mast weatherhead feeder

The routing, connection and support of the service drop must meet local codes. Homes equipped this way contain all necessary conduit to the electrical distribution panel. However, feeder conductors (not provided) must be installed on site in accordance with Fig. 8.8 on page 68. If the masthead is located above the roof overhang, allow a minimum 8' clearance above all roof points the conductors pass over. There are two exceptions to this rule: (1) The vertical clearance may be reduced to 3' if the roof has a minimum slope of 4 in 12; and (2) The vertical clearance may be reduced to 18" if no more than 4' of service-drop conductors pass above the roof overhang, and if they terminate at a through-the-roof raceway or approved support. A minimum clearance must also be provided from the final grade to the service-drop conductors. This measurement may vary from 10' to 18' depending on the types of traffic anticipated below the service drop (refer to the National Electric Code). Unless impractical, locate service heads above the point of attachment of the service drop conductors and make them rain-tight. If individual conductors do not extend downward, form drip loops.

8.6.4.3 Underside junction box feeder

A raceway from the main panelboard to the underside of the home allows for installing an approved junction box or fitting, which must be used to connect it to the supply raceway (see Figure 8.9 on page 68). Install properly sized conductors from the main power supply to the panelboard. Refer to Figure 8.9 for conductor and junction box requirements. The homeowner or installer must provide the supply connection including the feeder conductors, junction box and raceway connectors. Protect conductors emerging from the ground from a minimum 18" below grade to 8' above grade, or to the point of entrance to the home. The distance measured from the top surface of a buried cable, conduit or raceway to the finished grade must meet minimum burial requirements outlined in the National Electric Code. Use a moisture-proof bushing at the end of the conduit from which the buried cable emerges.

WARNING
This section must be completed by a licensed electrician or the power company.

8.6.4.4 Service equipment meter base

Either an overhead or underground entrance may be provided. The exterior equipment and enclosure must be weatherproof, and conductors must be suitable for use in wet locations. When a meter is provided on the home, connect the neutral (white) conductor to the system grounding (green) conductor on the supply side of the main disconnect. Refer to Fig. 8.11 on page 70 for typical meter base installations and one method of grounding the service equipment. The homeowner must provide the grounding electrode conductor(s). The grounding electrode should be an 8' length of 1/2" dia. copper rod or 3/4" galvanized steel pipe. Drive it into the ground at least 12" below the surface and 2' from the foundation, or bury it horizontally in a 2-1/2'-deep trench. Connect the grounding conductor wire to the grounding electrode with a grounding clamp.

8.6.5 Crossover connections

Refer to Figure 8.12 on page 71 for typical crossover wiring connections, for multisection homes (located along the centerline between the sections). Crossover locations can be distinguished by metal junction boxes or access cover panels. Remove these panels and connect the enclosed wires as illustrated. Some crossover connectors plug together and do not require junction boxes.

8.6.6 System test procedures and equipment

8.6.6.1 Pre-connection tests

Conduct both of the following tests before any electrical power is supplied to the home:

8.6.6.1.1 Circuit conductor continuity

Conduct a continuity test by placing all branch circuit breakers and switches controlling individual outlets in the "on" position. The test should give no evidence of a connection between any of the supply conductors (including the neutral) and the grounding circuit. You may use a flashlight continuity tester.

8.6.6.1.2 Grounding continuity

Using a continuity tester, test all noncurrent-carrying metal parts to assure continuity to ground. The parts to be checked include:

- appliance enclosures, including fans;
- fixture enclosures and canopies; metal
- siding and roofs;
- metal water supply and gas lines;
- metal ducts (except foil-covered insu lated ducts);
- the home's frame.

On multisection units, perform this test only after completing all electrical and bonding connections between the units. NOTE: GROUNDING IS NOT REQUIRED ON THE METAL INLET OF A PLASTIC WATER SYSTEM OR ON PLUMBING FIXTURES SUCH AS TUBS, FAUCETS, SHOWER RISERS, AND METAL SINKS WHEN THEY ARE CONNECTED ONLY TO PLASTIC WATER AND DRAIN PIPING.

8.6.6.2 Post-connection tests

Conduct the following three tests after turning on the main circuit breaker and each individual circuit breaker. **CAUTION; ALLOW THE WATER HEATER TO FILL COMPLETELY BEFORE ACTIVATING THE WATER HEATER CIRCUIT. FAILURE TO DO**

SO WILL CAUSE THE WATER HEATER ELEMENT TO BURN OUT, AN EVENT NOT COVERED BY THE WARRANTY.

8.6.6.2 .1 Polarity and grounding of receptacles

With receptacle and lighting circuits energized, check the polarity and grounding of each 120-volt receptacle and light socket using a polarity tester capable of determining an incorrect wiring configuration. A conversion device may be required to test various fixture bulb sizes and outlet configurations. Investigate any indication of reversed polarity, open grounds or shorts and correct it.

8.6.6.2.2 Ground Fault Circuit Interruption (GFCI)

Make certain that all receptacles requiring GFCI protection are in fact on the correct circuit(s). Check each ground fault circuit interrupter device by pushing the test button to determine if the power route to the receptacle has been interrupted, or follow the manufacturer's instructions. Replace any GFCI that does not operate properly.

8.6.6.2.3 Operational checks

Check all light fixtures by placing a bulb in the socket and turning the switch on and off. Using a pigtail light, check all 240 volt receptacles to determine if both legs of the circuit are powered. Check all 120 volt receptacles to be sure that each is operational. Switched receptacles require the switch to be turned on and off. It is not necessary to check appliances, but their power sources must be assured. Failure of electrical wiring or fixtures requires repair and retesting.

Figure 8.8: Typical Overhead Feeder Assembly

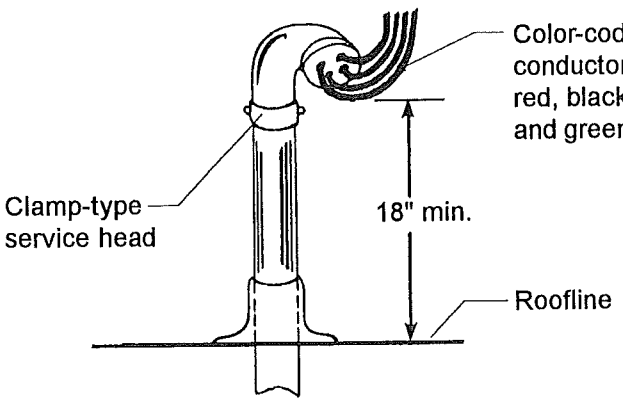

WARNING

BE SURE TO CONNECT DOUBLE-SECTION CHASSIS TOGETHER WITH BONDING WIRE WITH SCREW TERMINALS ON EACH END TO ONE I-BEAM ON EACH HALF OF THE DOUBLE-SECTION HOME. See Fig. 8-10.

Copper Conductor Size 75° Wire

Service (Amps)	Wire Size (Awg)			Conduit Size
	Feeder	Ground	Neutral	
100	#3	#8	#3	1 1/4"
150	#0	#6	#3	1 1/2"
200	#000	#6	#3	2"

Figure 8.9: Typical Underside Feeder Assembly

WARNING

BE SURE TO CONNECT DOUBLE-SECTION CHASSIS TOGETHER WITH BONDING WIRE WITH SCREW TERMINALS ON EACH END TO ONE I-BEAM ON EACH HALF OF THE DOUBLE-SECTION HOME. See Fig. 8-10.

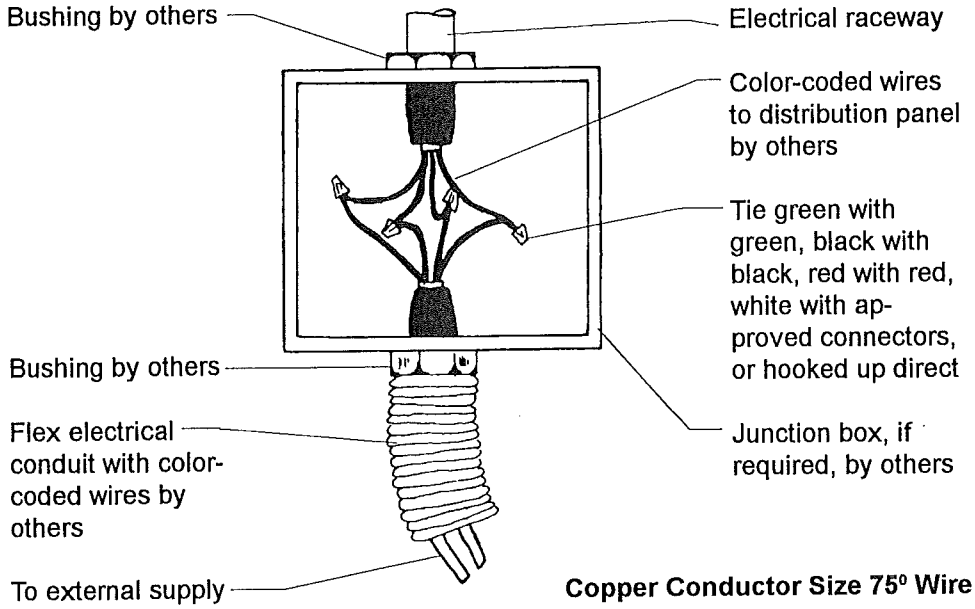

Copper Conductor Size 75° Wire

Service (Amps)	Wire Size (Awg)			Conduit Size	Box Size
	Feeder	Ground	Neutral		
100	#3	#8	#3	1 1/4"	10x10x4
150	#0	#6	#3	1 1/2"	10x12x4
200	#000	#6	#3	2"	12x12x4

Figure 8.10: Multisection Frame Bonding

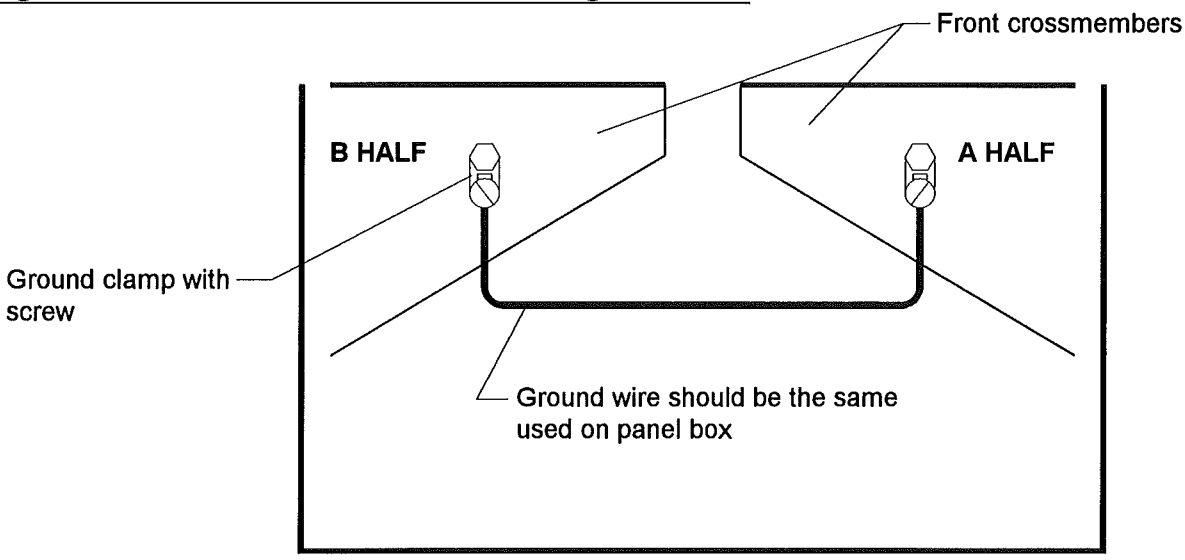

Figure 8.11: Typical Meter Base Installations and Grounding

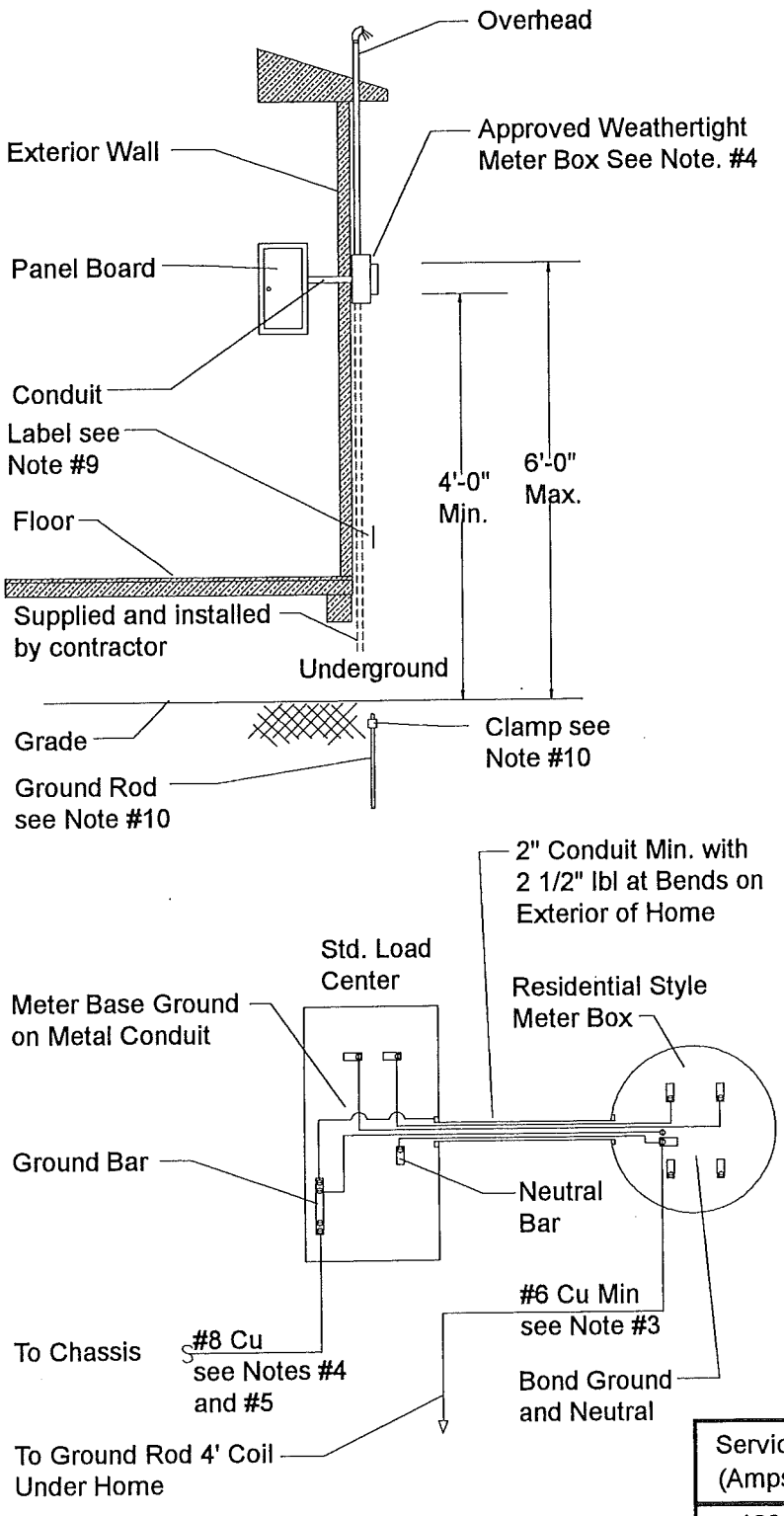

NOTES:

1. Wires must be installed from the panel box to the meter connections.
2. See wire chart for conductor size.
3. Install a #6 cu ground wire and coil approx. 4 ft.
4. Install a #8 cu bond wire from panel ground bar to chassis for bonding.
5. Install a bare #8 wire from panel bd. through decking to chassis for bond wire.
6. If the main breaker in the panel box is also the service disconnect, the panel box shall be mounted on an outside wall or interior partition within one stud bay of the outside wall. The service entrance conductors shall enter the home at this point. Otherwise the meter box shall contain a disconnect.
7. 2x6 blocking is required to support meter box.
8. Panel board may be inverted if necessary.
9. A red warning label shall be mounted on or adjacent to the service equipment. The label shall state:

> **WARNING**
> Do Not Provide Electrical Power Until the Grounding Electrode is Installed and Connected.(See Installation Instructions)

10. Grounding electrode & clamp for direct burial per section 250-83, 1993 NEC. Shall be supplied and installed by contractor.
11. The main electrical distribution panel may be mounted on the outside of an exterior wall. Such equipment shall be listed for exterior use and installed per the manufacturer's instructions.

Copper Conductor Size 75° Wire

Service (Amps)	Wire Size (Awg)			Conduit Size
	Feeder	Ground	Neutral	
100	#3	#8	#3	1 1/4"
150	#0	#6	#3	1 1/2"
200	#000	#6	#3	2"

Figure 8.12: Electrical Crossovers

Standard: Junction Box

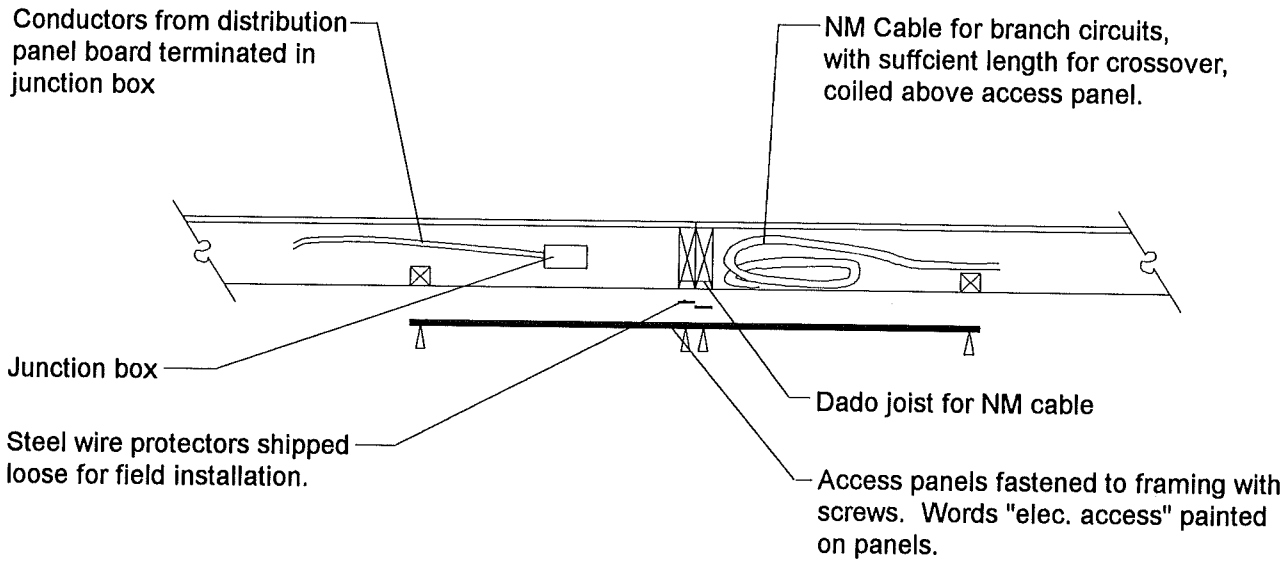

Alternate: NM Cable Connector

The AMP Industries NM Cable connector for 15 and 20 amp circuit crossovers may be made without junction box

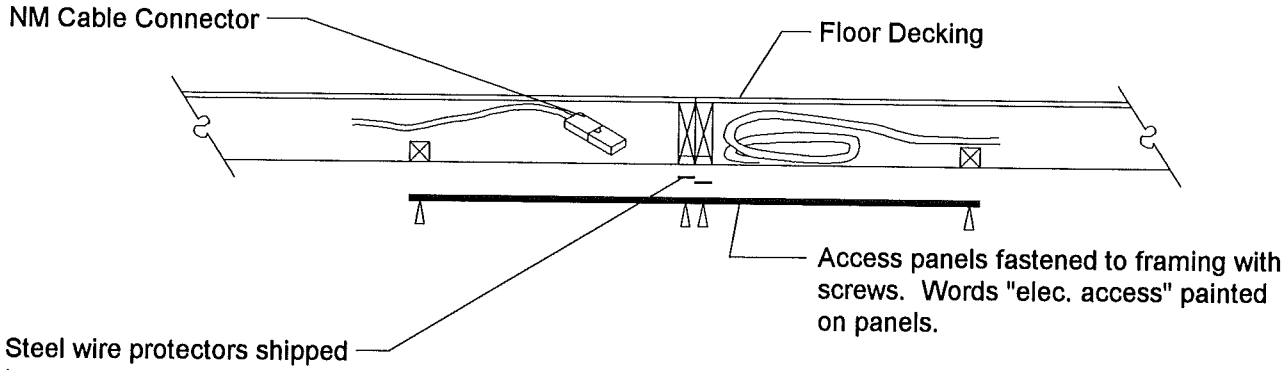

This home may be shipped with one or more plug-in connectors. These connectors are to be snapped together on set-up. Connectors will be color-coded and/or tagged to prevent mixing of circuits.

Chapter 9 - Final Inspection

Make a final inspection when home installation is complete to make sure that no items have been overlooked and that all work was done properly. Place special emphasis on the following "checklist" items:

9.1 Water and drain systems

All water and drain systems work properly and do not leak.

9.2 Appliance function and operation

Appliances have been tested and work properly.

9.3 Windows, doors and drawers

All windows, doors and drawers work properly; windows open & doors swing freely.

9.4 Exit windows

One window in each bedroom is designated as a secondary exit to be used in case of emergency. Each exit window is labeled as such with operating instructions. All shipping hardware should be removed, and the window should operate as explained in the window manufacturer's instructions.

9.5 Exterior siding and trim

There are no gaps, voids, or missing fasteners.

9.6 Stack heads and vent pipe flashings on roof

All stack head or vent pipe flashings are properly attached and sealed.

9.7 Composition roof

All shingles are properly attached, none are loose or missing, and all holes are filled.

9.8 Skirt venting

The skirting around the home has non-closing vents, located at or near each corner as high as possible to cross-ventilate the entire space under the home. The free area of these vents must be equal to at least one square foot for every 150 square feet of floor area of the home. The vent size must be increased to allow for insect screens, slats, louvres, etc., used over the open vent area.

9.9 Low-hanging trees and bushes

If there are any low-hanging trees or bushes near your home, trim or cut them. Think about the plants' possible movement during windy conditions or under snow or ice loads in limiting their future growth.

9.10 Exhaust fan operation and air flow

Check all exhaust fans for proper operation and air flow.

9.11 Bottomboard

Carefully inspect the bottom covering of the home for loosening or tears from installation of pipes or wires. Seal openings around the floor perimeter, pipes or pipe hangers and splits or tears with weather-resistant tape. Check for excessive "Bagging" indicating possibility of water from a leak.

9.12 Ground cover

Repair any cuts or tears in the ground cover with tape.

9.13 Anchors and straps

Be sure the correct number of anchors have been installed at the proper angle, and that all straps have been tightened.

9.14 Interior details

Inspect for, and correct, all interior finishing details, such as loose moulding, carpet seams etc. The retailer's representative should inspect the home with the homeowner, give the homeowner a copy of the Homeowner's Manual, and brief the homeowner about maintaining the home.

10.1 Relocation of the home

If it is necessary to move the home, **HAVE IT MOVED BY A PROFESSIONAL MANUFACTURED HOME MOVER, MAKE SURE ENOUGH TEMPORARY WOOD BLOCKING IS USED**, and check the following items:

10.1.1 New Zones

Check the roof and wind load and the temperature requirements at the new location. If the new requirements are greater than those shown on your home's compliance certificate, check the cost of adapting the home before moving. Otherwise, any resulting damages will not be covered under your warranty, and you may be held liable for any failures. Check with Champion, your home retailer, or a qualified manufactured home mover about making these home improvements.

10.1.2 Tires and axles

Replace any removed tires or axles as required by the manufacturer. Be sure that tires are inflated correctly, have at least 1/16" tread, and do not have any cracks or splits. Check and repair bearings and brakes as necessary.

10.1.3 Appliances

Secure appliances to prevent movement during transportation.

10.1.4 Dust caps

Place dust caps on the ends of all pipe connections.

10.1.5 Blocking during storage

Any home placed in storage, including those on sales lots, must be immediately blocked under each I-beam, both at the rear of the home and midway between axles and hitch, to prevent excessive deflection and possible structural damage.

10.1.6 Transit of furniture and belongings

Substantial damage may result if furniture, personal belongings, setup materials or other items are stored in the home during transit. **TRANSIT DAMAGE IS NOT COVERED UNDER YOUR WARRANTY.**

10.1.7 Multisection homes

Reinstall temporary structural supports and bracing materials before moving the home. Cover open sides of sections with weatherproof material such as 6-mil plastic sheeting. After the sections have been separated, secure 2" x 6" shipping braces at the front end and in the axle area. Place ridge beam supports in open areas at a maximum of 12' on center.

NOTES

NOTES

NOTES

Champion Home Builders Co.
Plant Locations

ALABAMA
Champion Home Builders Co.
Gateway Homes Division
P.O. Box 728
Guin, Alabama 35563
Phone: (205) 468-3191
Fax.: (205) 468-3336

CALIFORNIA
Champion Home Builders Co.
Champion Homes Division
P.O. Box 429
Lindsay, California 93247
Phone: (209) 562-4951
Fax: (209) 562-1463

COLORADO
Champion Home Builders Co.
Titan Homes Division
P.O. Box 10
Berthod, Colorado 80513
Phone: (303) 532-2632
Fax: (303) 532-4352

IDAHO
Champion Home Builders Co.
Tamarack Homes Division
P.O. Box 190
Weiser, Idaho 83672
Phone: (208) 549-1410
Fax: (208) 549-0060

INDIANA
Champion Home Builders Co.
Champion Homes Division
P.O. Box 57
Ridgeville, Indiana
Phone: (317) 857-2561
Fax: (317) 857-2996

NEBRASKA
Champion Home Builders Co.
Atlantic Homes Division
P.O. Box 148
Central City, Nebraska 68826
Phone: (308) 946-3021
Fax: (308) 946-3183

NEBRASKA
Champion Home Builders Co.
Champion Homes Division
P.O. Box 585
York, Nebraska 68467
Phone: (402) 362-4455
Fax: (402) 362-7724

NEW YORK
Champion Home Builders Co.
Titan Homes Division
P.O. Box 56
Sangerfield, New York 13455
Phone: (315) 841-4122
Fax: (315) 841-4660

NORTH CAROLINA
Champion Home Builders Co.
Champion Homes Division
P.O. Box 1148
Lillington, North Carolina 27546
Phone: (910) 893-5713
Fax: (910) 893-2065

NORTH CAROLINA
Champion Home Builders Co.
Titan Homes Division
P.O. Box 1389
Lillington, North Carolina 27546
Phone: (910) 893-2121
Fax: (910) 893-6649

PENNSYLVANIA
Champion Home Builders Co.
Atlantic Homes Division
P.O. Box 343
Claysburg, Pennsylvania 16625
Phone: (814) 239-5121
Fax: (814) 239-2870

TENNESSEE
Champion Home Builders Co.
Atlantic Homes Division
P.O. Box 100
Henry, Tennessee 38231
Phone: (901) 243-2041
Fax: (901) 243-2841

CHAMPION HOME BUILDERS CO.
Corporate Headquarters
2701 University Dr., Suite 300
Auburn Hills, Michigan 48326

© COPYRIGHT 1994 CHAMPION HOME BUILDERS CO.