MINUTE MAN ANCHORS, INC.

INSTRUCTIONS FOR USING MINUTE MAN STABILIZING DEVICE

Minute Man stabilizing devices are designed for use with Minute Man anchors and intended to restrict movement of the anchor laterally through the soil.

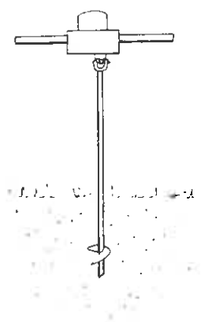

1. Install the anchor into the ground leaving 12"-18" of the shaft exposed.

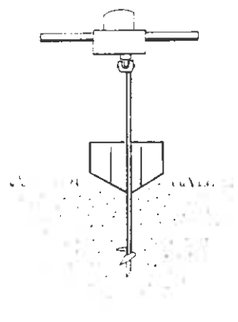

2. Place the stabilizing device next to the shaft in the direction of pull.

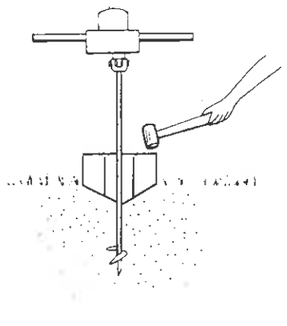

3. Drive the stabilizing device into the ground.

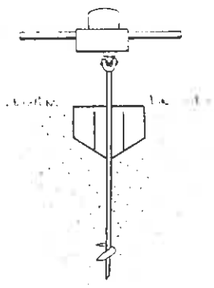

4. The anchor is then turned in the rest of the way into the soil until the head of the anchor is flush with the stabilizing device.

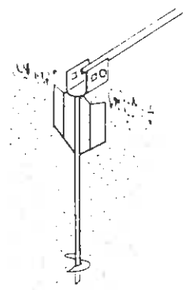

5. As the frame tie is tightened the anchor will be snugged against the stabilizing device for safe, secure protection against lateral movement.

Installation Instructions for Cross Drive Rock Anchor

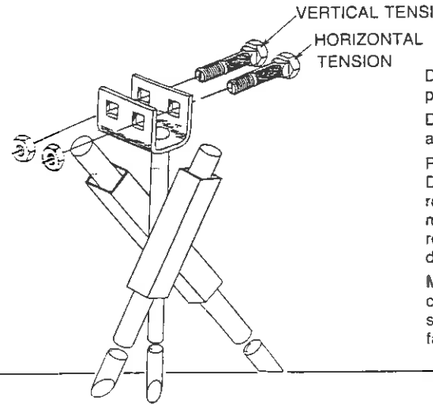

INSTALLATION INSTRUCTIONS

Drill 5/8" diameter hole 5½" deep for pilot stud. Insert pilot stud into hole.

Drill 2 - 3/4" diameter holes in rock at 45 degree angles, using anchor head as a locating guide.

Place rod through top of (1) square tube and into hole. Drive rod to desired depth. (Rod must be driven into rock at least 80% of its length in order to achieve minimum allowable pullout resistance.) Place second rod through top of remaining tube. Drive rod to desired depth to lock.

Maximum pullout resistance is developed when anchor head is low as possible and ground surface is solid rock. Distance from square tubing to rock surface should not exceed 1".

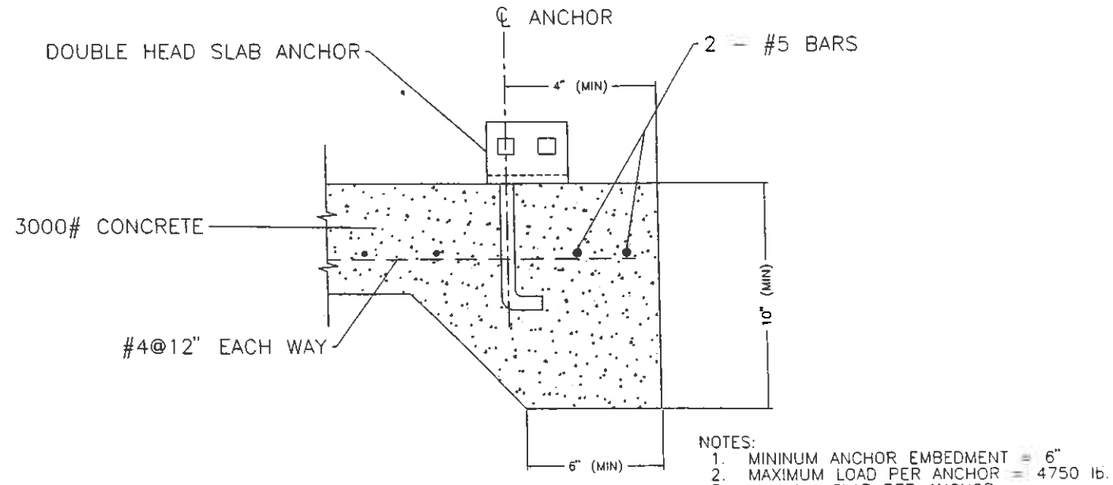

NOTES:
1. MININUM ANCHOR EMBEDMENT = 6"
2. MAXIMUM LOAD PER ANCHOR = 4750 lb.
3. MINIMUM SLAB PER ANCHOR:
   4" SLAB = 95 S.F.
   6" SLAB = 65 S.F.
   8" SLAB = 48 S.F.
4. MARK: MMA-14

TITLE: DOUBLE HEAD SLAB ANCHOR

MODEL: 210 - PDH

NOTE!
1. MININUM ANCHOR EMBEDMENT = 6"
2. MAXIMUM LOAD PER ANCHOR = 4750 lb.
3. MINIMUM SLAB PER ANCHOR:
   4" SLAB = 95 S.F.
   6" SLAB = 65 S.F.
   8" SLAB = 48 S.F.
4. MARK: MMA 42

NORTH CAROLINA PROFESSIONAL 4672 ENGINEER ROBERICK M. HUDGINS

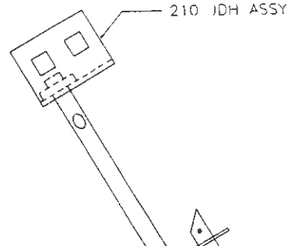

TITLE: DBL. HEAD SLAB ANCHOR INSTALLATION DETAILS

MODEL: 210 JDH

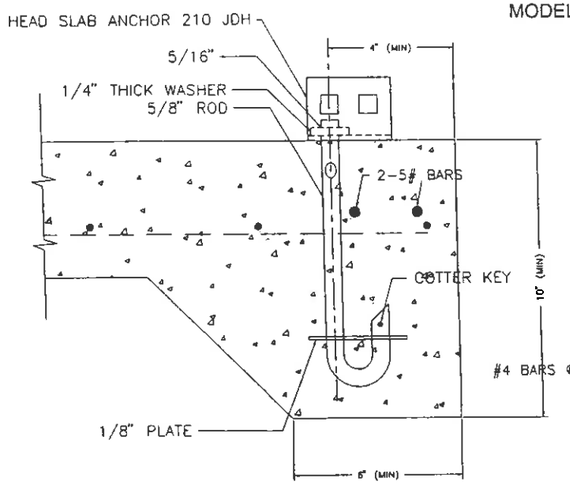

ALT.#1 — ANCHOR PLACED IN FRESH CONCRETE

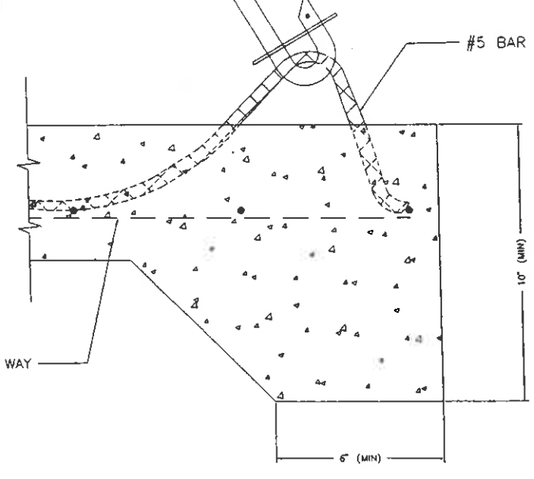

ALT.#2 — ANCHOR HOOKED TO REBAR LOOP

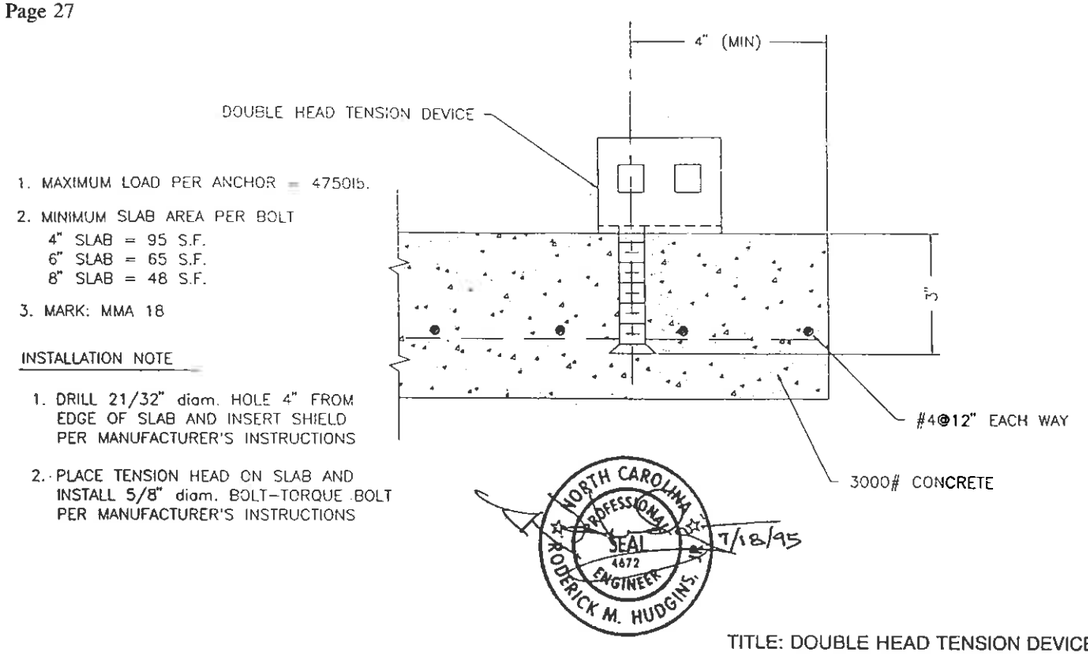

TITLE: DOUBLE HEAD TENSION DEVICE

MODEL: THDHLS

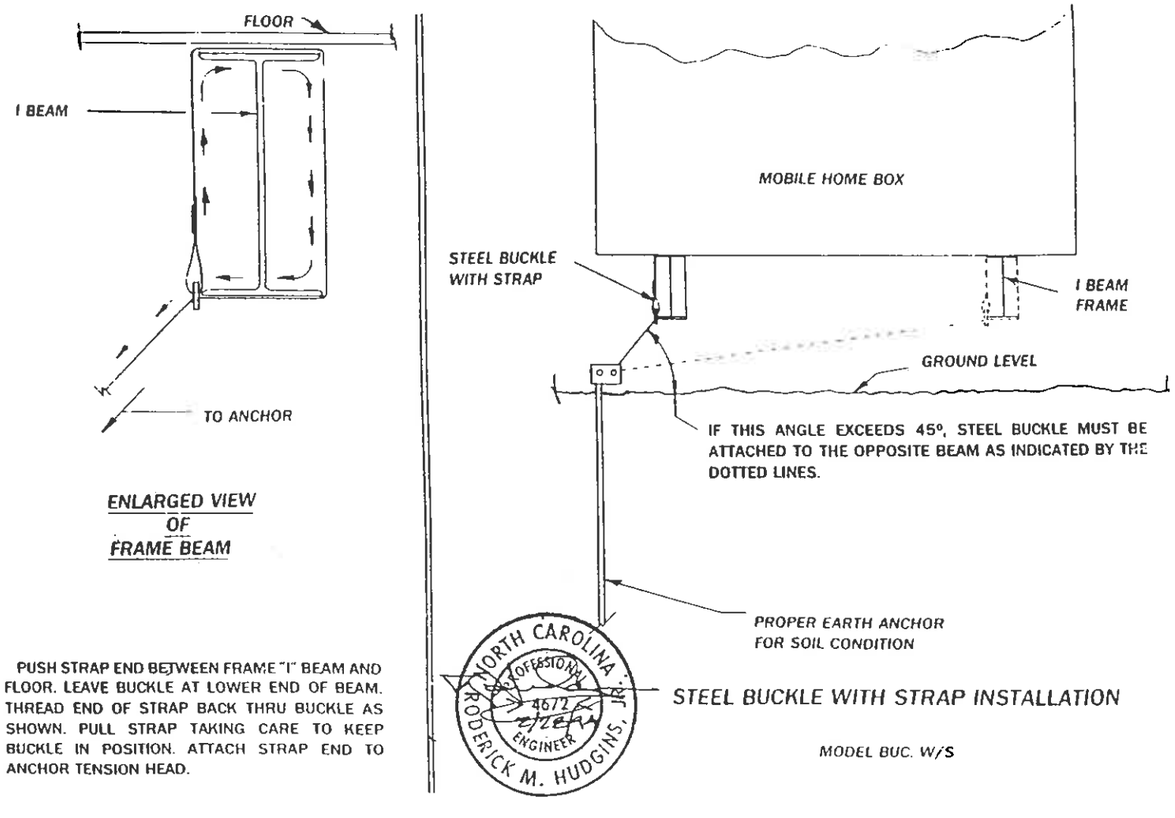

STEEL BUCKLE WITH STRAP INSTALLATION

MODEL BUC. W/S

PROPERLY INSTALLED AND CONNECTED GROUND ANCHOR AND FRAME CONNECTION

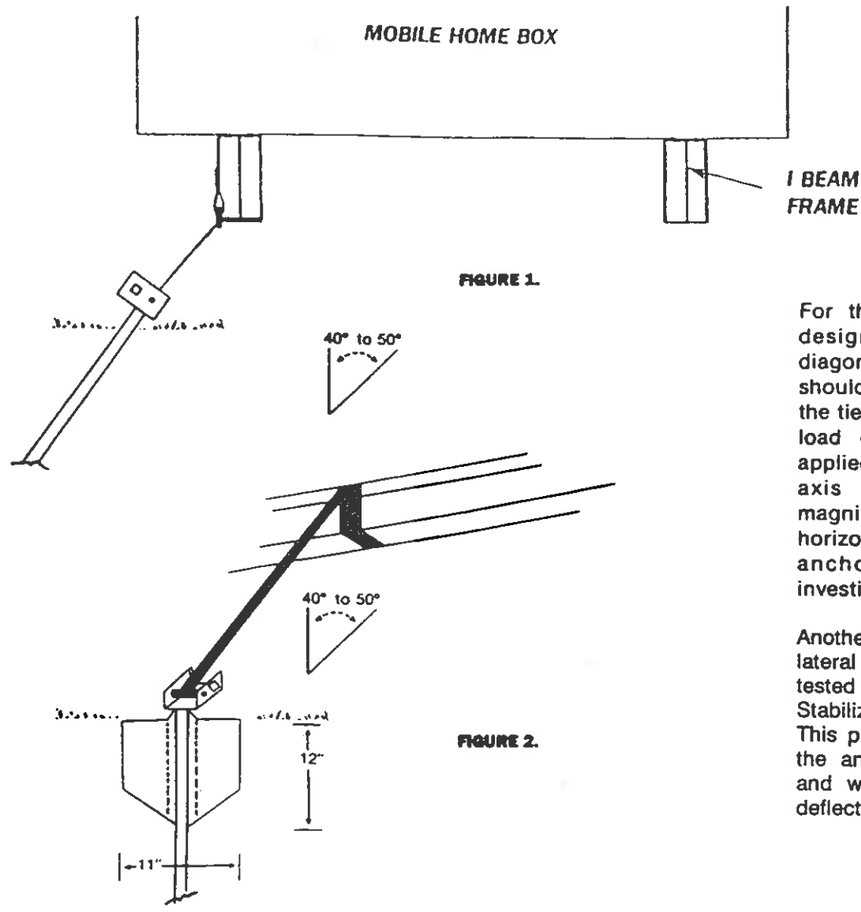

FIGURE 1.

FIGURE 2.

For those homes which are designed to require only diagonal frame ties, the anchor should be installed in line with the ties. (FIGURE 1) When the load on the anchor is not applied in line with the long axis of the anchor, the magnitude and effect of the horizontal movement of the anchor head should be investigated.

Another accepted way to limit lateral deflection is by use of a tested and approved "Metal Stabilizing Device" (Figure 2). This plate is driven in front of the anchor's direction of pull and will act to minimize rod deflection.

PROPER TENSIONING OF STRAP TO ANCHOR HEAD

Note: The tensioning bolt can be inserted in the head from either side.

Notice: In areas of severe cold weather where possible damage could occur from frost heave, the homeowner should release some of the tension from the vertical tie each fall.

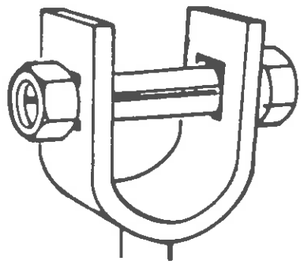

1. Insert bolt into head; attach nut loosely.

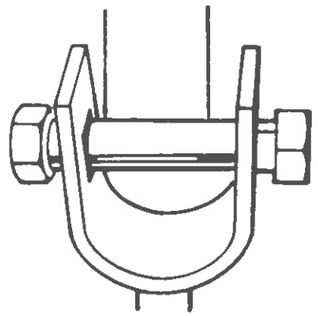

2. Insert strap in slot of bolt 5/8", or until strap is flush with far side of bolt.

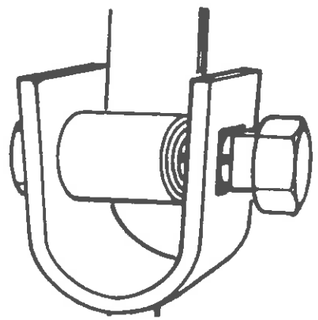

3. Bend strap 90° and take at least four complete turns on bolt until strap is taut.

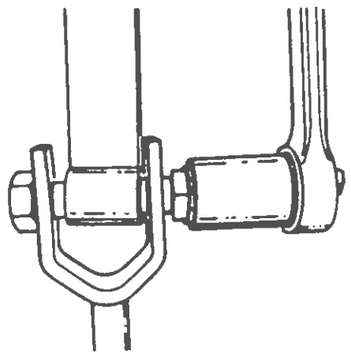

4. Bolt is turned with 15/16" socket wrench, or adjustable wrench, on hex head.

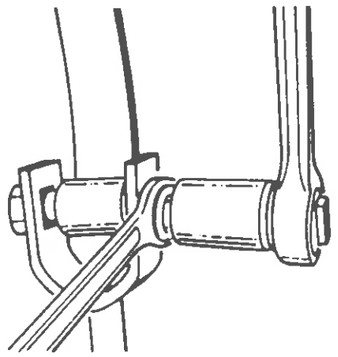

5. To hold bolt under tension while re-positioning wrench, an open-end wrench is placed on 5/8" square shoulders of bolt.

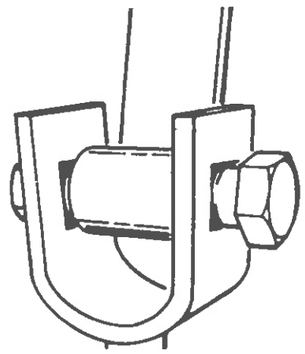

6. Align square shoulders of bolt with square hole in anchor head.

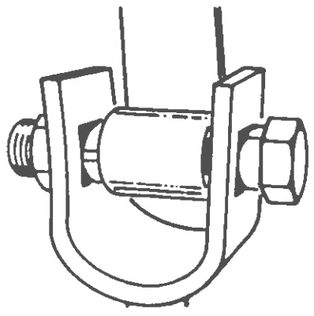

7. Holding hex head of bolt in position, tighten nut to draw square shoulders into square hole.

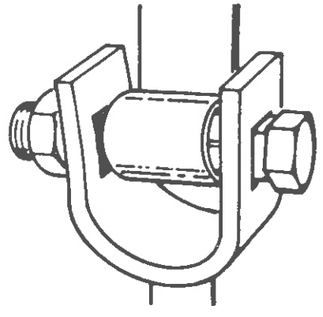

8. Shoulders are now in locking position; continue to tighten nut.

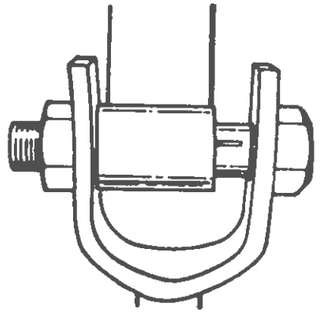

9. Tensioning device is now in locked, secure position.

For clarity, tools not shown on most photos above.

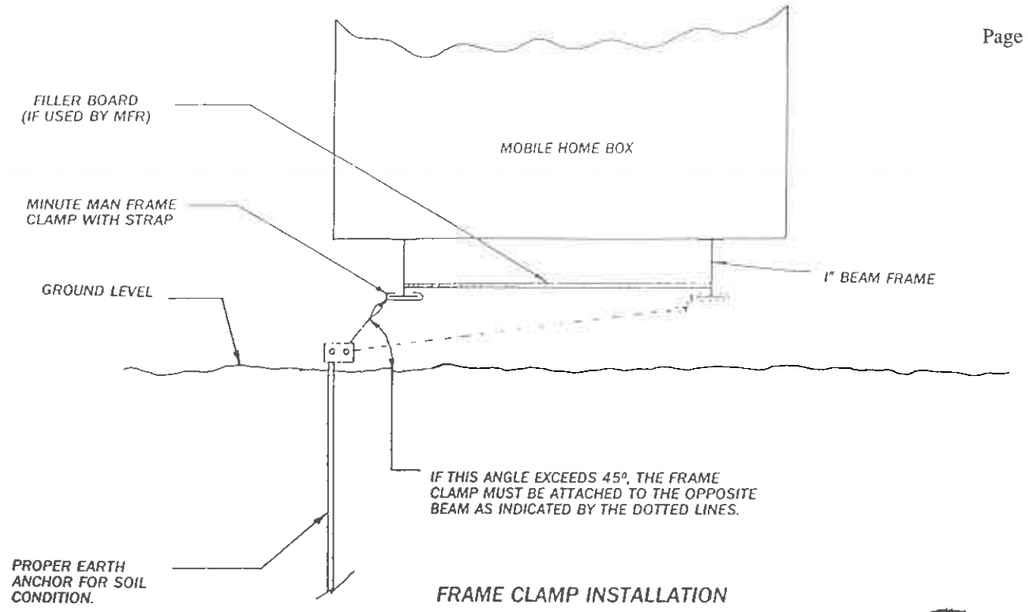

FRAME CLAMP INSTALLATION

MODEL FCW/S

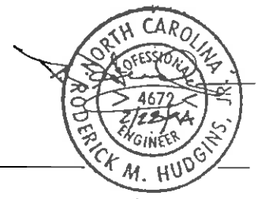

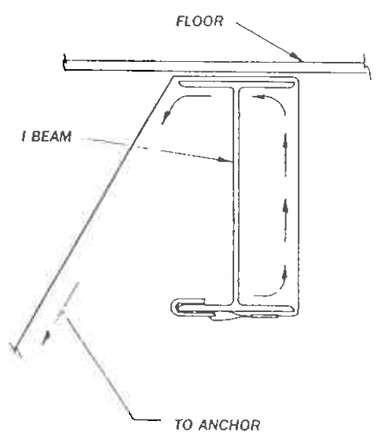

ENLARGED VIEW
OF
FRAME BEAM

HOOK FRAME CLAMP ON OUTSIDE BOTTOM FLANGE OF MOBILE HOME FRAME. PLACE STRAP BETWEEN FRAME AND HOME AS SHOWN IN SKETCH. PULL STRAP TIGHT AND ATTACH TO ANCHOR TENSION HEAD.

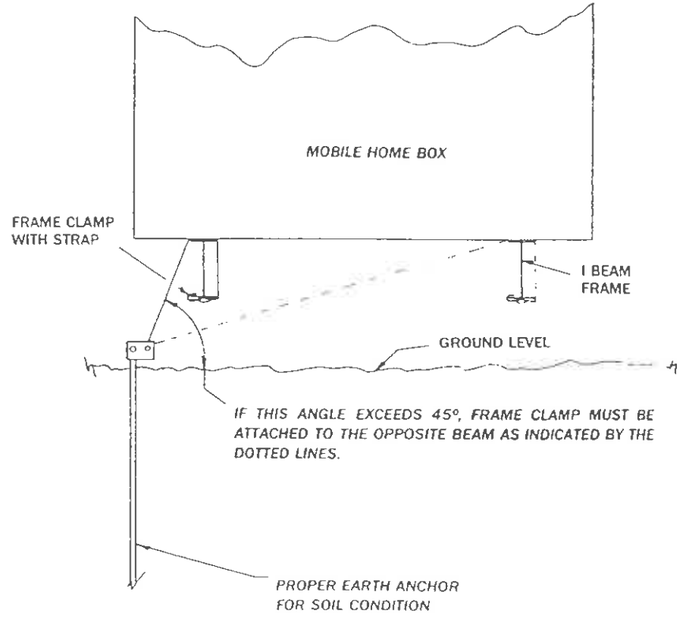

FRAME CLAMP WITH STRAP INSTALLATION

MODEL FCIIW/S

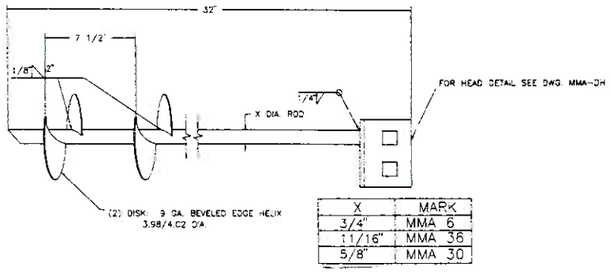

X	MARK
3/4"	MMA 6
11/16"	MMA 36
5/8"	MMA 30

MODEL: 4430 – DH

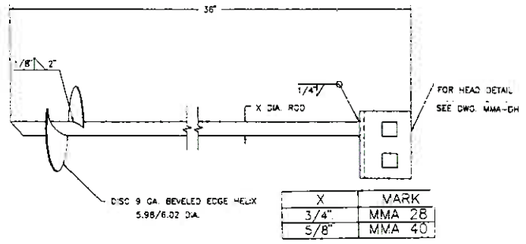

X	MARK
3/4"	MMA 28
5/8"	MMA 40

MODEL: 636 – DH

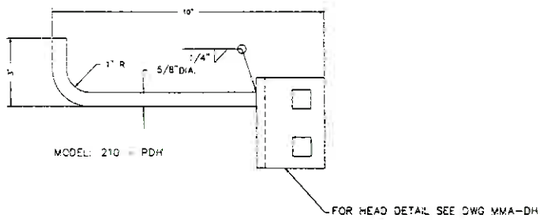

MODEL: 210 – PDH

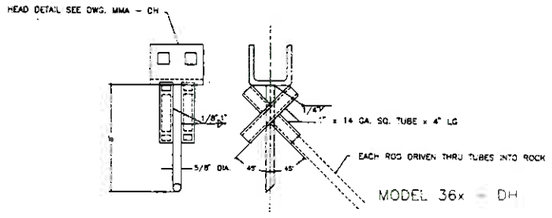

MODEL 36x – DH

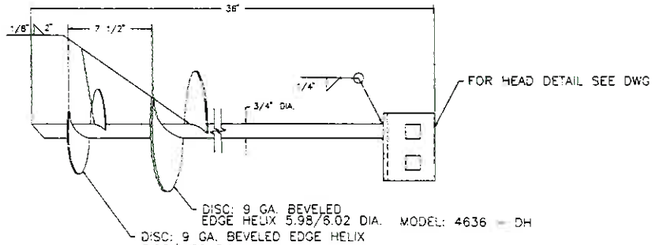

MODEL: 4636 – DH

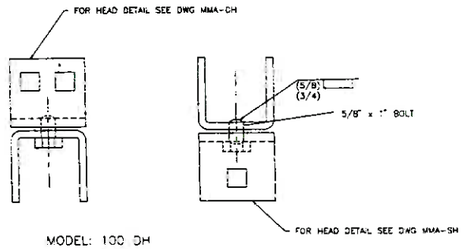

MODEL: 100 DH

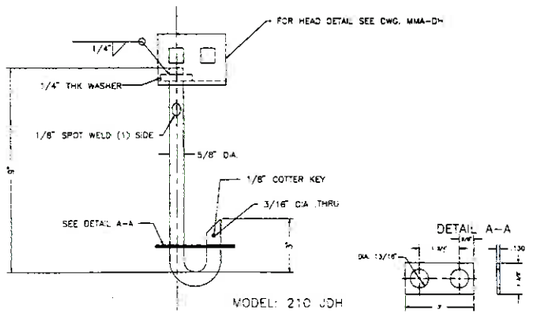

MODEL: 210 JDH

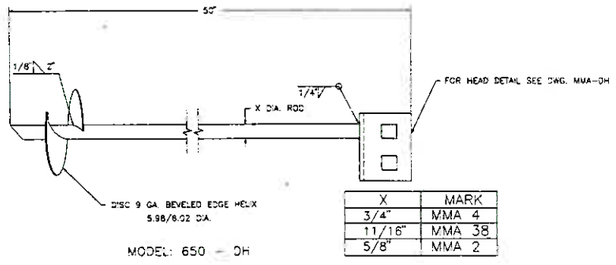

X	MARK
3/4"	MMA 4
11/16"	MMA 38
5/8"	MMA 2

MODEL: 650 – DH

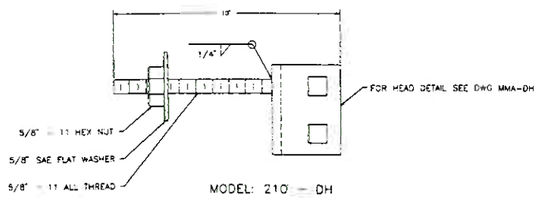

MODEL: 210 – DH

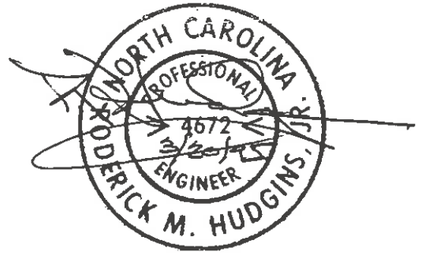

Minute Man anchors®

POSITIONING FRAME TIE

FRAME TIE INSTALLATION INSTRUCTIONS

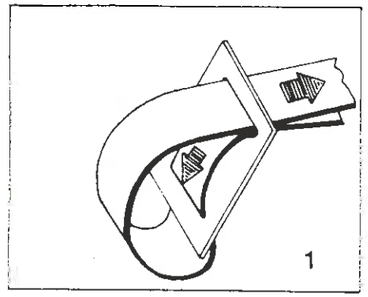

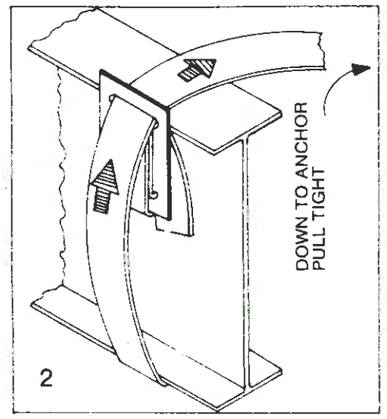

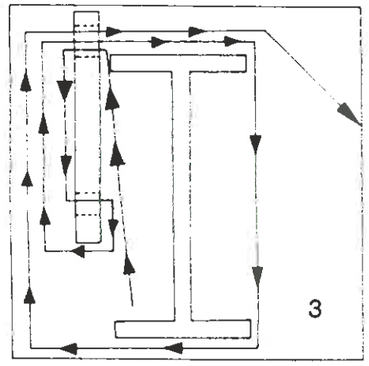

1. Thread 7' length of frame tie strap through buckle as shown.
2. Next, thread long end of strap between frame and floor of home. Bring strap through buckle as shown in diagram and fasten to anchor head.
3. Diagram showing strap in position around frame and through buckle. It is important to remove all slack from system.

1. See step one in installation instructions.

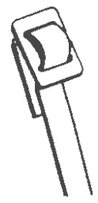

2. Insert strap in position through buckle.

3. Strap should be through buckle in this configuration before installation on frame.

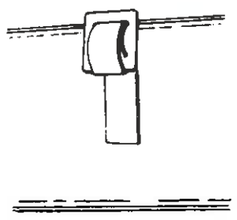

4. Strap should be passed over frame from inside, and buckle pulled into position as shown.

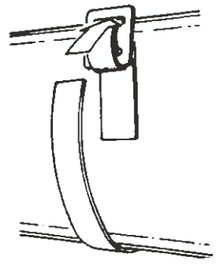

5. Strap should encircle frame and pass through buckle for the second time and over the frame.

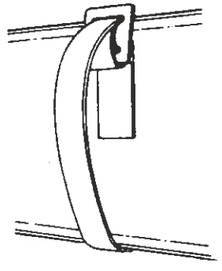

6. Strap is pulled tight from outside, or anchor side, of frame.

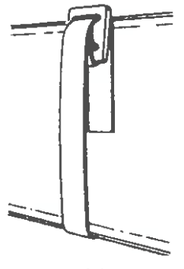

7. Inside of frame tie, properly installed.

Minute Man anchors®

INSTALLATION

There are two basic methods of installing anchors, each equally effective in properly securing mobile homes to the ground.

MACHINE INSTALLATION

In this method, the anchor is turned four feet (or to full depth) into the ground by an anchor drive machine.

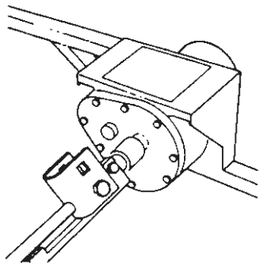

1. Attach anchor to machine.

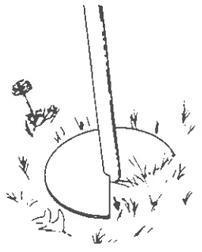

2. Auger is placed in proper position in line with strap, and machine started.

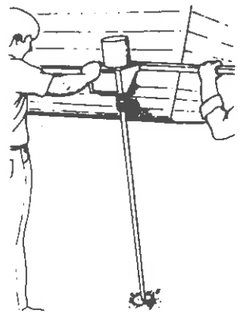

3. Anchor should be installed at a slight angle as shown to assure head being positioned behind future skirting.

CAUTION: The installation of anchors with a drive machine is a two person operation.

INSTALLATION WITH MANUAL OR MECHANICAL POST HOLE DIGGER

In this method, anchors can be installed with equipment available to the average homeowner.

1. A hole is dug to a depth of approximately two feet in the proper position as explained under machine installation.

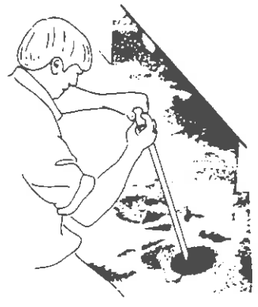

2. After the hole is dug to 24" depth, the anchor is turned into the ground by hand, using a rod or length of pipe for leverage.

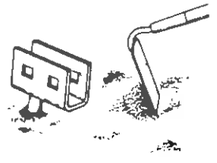

3. After anchor is installed to **full depth,** earth is repacked, six inches at a time.

WARNING: Be careful to avoid underground water lines, phone lines and power lines using either method.

R.M. Hudgins, Jr., P.E.
P.O. Box 5070
Asheville, N.C. 28813
704-274-9244

August 3, 1994

Mr. Tom Hackney
Minute Man Anchors, Inc.
305 West King Street
East Flat Rock, N.C. 28726

Dear Mr. Hackney:

I have analyzed design drawings,physical testing reports, and installation instructions for the Minute Man products listed below:

650-DH 5/8	4636-DH 3/4	36X-DH	THDH
650-DH 3/4	4430-DH 5/8	48X-DH	THDHLS
650-DH 11/16	4430-DH 11/16	36-DH	FCI W/S
636-DH 5/8	4430-DH 3/4	210-DH	FCII W/S
636-DH 3/4	4450-DH 5/8	210-PDH	BUC W/S
672-DH 3/4	4450-DH 11/16	210-JDH	SBNB
860-DH 3/4	4450-DH 3/4	100-DH	MMASD2
			MMA STRAP

My analysis and the physical test reports define the breaking strength of each of these anchors and their components to be in excess of 5,000 pounds. The strapping meets Federal Specification QQ-S-781H for Type I, Class B, Grade 1 strapping. The strapping also meets with ANSI 225.1 standards and ASTM D 3953-91 standards. The strapping is 1 1/4 X .035 minimum, hot dip galvanized steel.

On file are testing reports of the direct withdrawal strength of these anchors. These tests evaluate the anchorage strength of Minute Man Anchors installed resisting an axial and 45 degree angle applied withdrawal load. For the anchors listed on the attached sheet, the average ultimate holding power is not less than 5,433 pounds when installed in accordance with manufacturer instructions in the soil types indicated in the "table".

Very truly yours,

NORTH CAROLINA PROFESSIONAL SEAL ENGINEER RODERICK M. HUDGINS JR.

9/19/94

R.M. Hudgins, Jr., P.E.

LIST OF CERTIFIED MINUTE-MAN ANCHORS WITH A MINIMUM HOLDING POWER OF 4,725 POUNDS (2143 kg).

1. Sound Hard Rock.
2. Very-dense and/or cemented sands, coarse gravel and cobbles, preloaded silts, clays, and corals. (Probe torque value range-greater than 550 inch pounds).
3. Medium-dense coarse sands, sandy gravels, very-stiff silts and clays, (Probe torque value range- 350-550 inch pounds).
4. Loose to medium dense sands, firm to stiff clays and silts, alluvium fill. (probe torque value range- 200-349 inch pounds).

MARK	MODEL	DESCRIPTION	USE IN SOIL TYPE*
MMA-2	650-DH 5/8	Double Head, Earth Auger Anchor	2,3,4
MMA-4	650-DH 3/4	Double Head, Earth Auger Anchor	2,3,4
MMA-38	650-DH 11/16	Double Head, Earth Auger Anchor	2,3,4
MMA-40	636-DH 5/8	Double Head, Earth Auger Anchor	2,3,4
MMA-28	636-DH 3/4	Double Head, Earth Auger Anchor	2,3,4
MMA-30	4430-DH 5/8	Double Head, Double Disk, Earth Auger Anchor	2
MMA-36	4430-DH 11/16	Double Head, Double Disk, Earth Auger Anchor	2
MMA-6	4430-DH 3/4	Double Head, Double Disk, Earth Auger Anchor	2
MMA-52	4636-DH 3/4	Double Head, Double Disk, Earth Auger Anchor	2,3,4
MMA-53	4450-DH 5/8	Double Head, Double Disk, Earth Auger Anchor	2,3
MMA-54	4450-DH 11/16	Double Head, Double Disk, Earth Auger Anchor	2,3
MMA-55	4450-DH 3/4	Double Head, Double Disk, Earth Auger Anchor	2,3
MMA-35	36-XDH	36" Double Head Cross Drive Anchor	1
MMA-8	48-XDH	48" Double Head Cross Drive Anchor	1
MMA-18	THDH	Double Tension Head	SLAB
MMA-18	THDHLS	Double Tension Head W/Lag & Shield	SLAB
MMA-10	36-DH	Double Head Coral Anchor	CORAL
MMA-12	210-DH	Double Head Threaded Concrete Anchor	SLAB
MMA-14	210-PDH	Double Head Anchor for Concrete	SLAB
MMA-42	210-JDH	Swivel Double Head Anchor W/base for Concrete	SLAB
MMA-22	100-DH	Double Head Tension Device Adaptor	CONNECT
MMA-SD2		Stabilizing Device	2,3,4

*NOTE: MANY ANCHORS ARE DESIGNED FOR PARTICULAR SOIL CONDITIONS AND ARE UNACCEPTABLE FOR USE IN OTHER TYPE SOILS. WE HAVE THEREFORE LISTED THE SOILS FOR WHICH EACH ANCHOR IS DESIGNED AND APPROVED. SOIL CLASSIFICATIONS ARE TAKEN FROM THE "STANDARD FOR THE INSTALLATION OF MOBILE HOMES".THE ANCHORS LISTED MEET ANSI A225.1 AND ASTM 3953.91 CODES.

TIE.MMO
Patriot Homes, Inc.
12-1-95
rev 9-23-96

Tie-Down information

The FMHCSS requires manufacturers to include a tie-down system in their installation manuals. The entire Minute-Man system is included in this manual. However, due to unique design and/or construction methods used by Patriot Homes, Inc., other details are included to suppliment the Minute-Man information and are identified as Patriot Homes, Inc.

There may be conflicting information between the "generic" Minute-Man and Patriot Homes, Inc. details. In all cases the Patriot Homes, Inc. details are to be followed and supercedes any of the Minute-Man.

The following information applies to homes being sited within Wind Zone 1 and II. Please verify the appropriate Wind Zone and carefully review the appropriate information. No home is to be sited within Wind Zone 3.

Any Minute-Man details that utilize the words "should" or "recommended" must be considered a REQUIRED reference.

Some Minute-Man details illustrate the ground anchor installed vertically. Patriot Homes, Inc. details must supercede and be followed which indicate the ground anchors must be installed diagonally.(ref pages 14 thru 18)

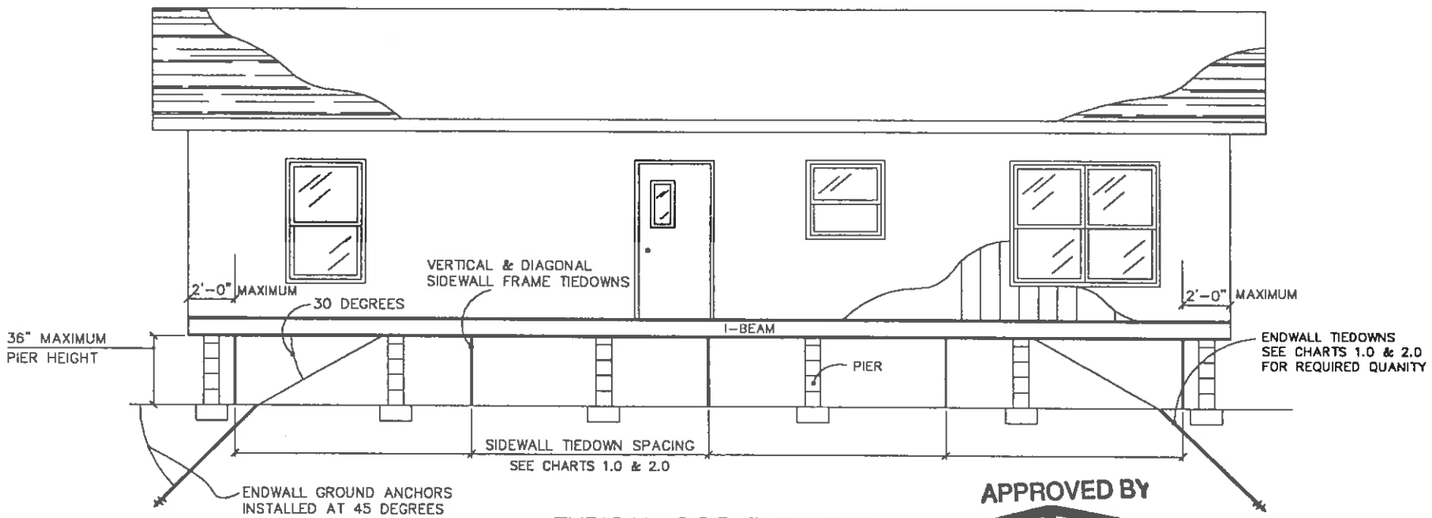

TYPICAL SIDE ELEVATION SHOWING TIEDOWN LOCATIONS

wind zone II

APPROVED BY NTA INC. SEP 2 1 1994
FEDERAL MANUFACTURED HOME CONSTRUCTION AND SAFETY STANDARDS

Notes:

1. Use this sheet for TIEDOWN information only. Pier construction shall be as specified elsewhere in this manual.
2. Refer to the Data Plate installed in the home to determine which wind zone the home has been designed for. Space TIEDOWNS for this zone as the charts specify.
3. Ground anchors and frame ties shall be certified by a Professional Engineer, Registered Architect or nationally recognized testing agency as capable of resisting ultimate tension loads of 4725# for straps and 6000# for anchors when tested in accordance with ASTM D3593-91.
4. Ground anchors and frame ties shall be installed in accordance with the manufacturer's instructions, and shall be appropriate for the soil conditions at the home site.
5. Ground anchors shall be embedded below the maximum frost penetration depth and 12" above the water table. Ground anchors shall be installed to their full depth and stabilizer plates shall be installed to provide added resistance to overturning and/or sliding.
6. Vertical and diagonal frame ties may be installed to the same ground anchor by using the equipment and installation methods specified by the anchor manufacturer.
7. Endwall TIEDOWNS shall be positioned just inside the chassis beams at a cross member.
8. Any foundation or TIEDOWN system not inaccordance with this manual shall be designed and certified by a licensed Professional Engineer familar with local conditions.
9. Steel anchoring equipment exposed to the weather shall be protected with a coating of at least 3.0 ounces of zinc per square foot.

PATRICK M. McGUIRE REGISTERED NO. 17446 STATE OF INDIANA PROFESSIONAL ENGINEER

Patrick M. McGuire 9/20/94

1180.1

COPYRIGHT © 1994 PATRICK M. McGUIRE, P.E. ALL RIGHTS RESERVED
SEPTEMBER 20, 1994

CLIENT: PATRIOT HOMES

305 West King Street • East Flat Rock, North Carolina 28726 • Telephone 704/692-0256

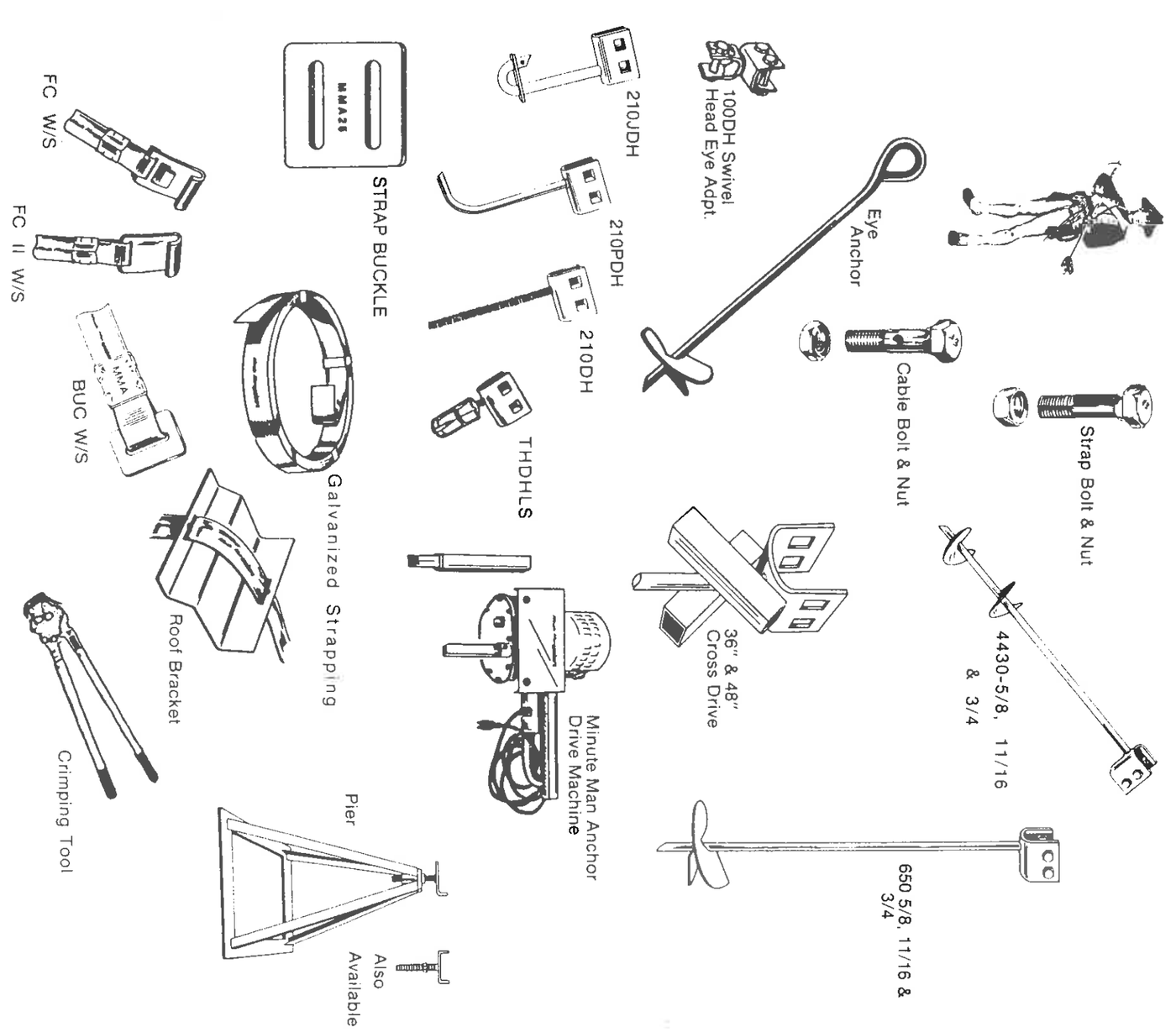

USE THIS SHEET FOR TIEDOWN INFORMATION ONLY. SEE TYPICAL SIDE ELEVATION SHEET FOR REQUIRED INFORMATION. FRAME TIES AND THE HEAD OF THE GROUND ANCHOR SHALL NOT EXTEND BEYOND THE WALL LINE OF HOME.

	NUMBER OF ENDWALL TIEDOWNS			MAX S/W SPACE
	ZONE 2	ZONE 3		ZONE 2
	2			22
	2			44'
	2			44'

PATRICK M. McGUIRE REGISTERED No. 17446 STATE OF INDIANA PROFESSIONAL ENGINEER

Patrick M. McGuire 9/20/94

MAXIMUM ROOF SLOPE LESS THAN 20 DEGREES

APPROVED BY NA INC FEDERAL MANUFACTURED HOME CONSTRUCTION AND SAFETY STANDARDS

SEP 2 1 1994

WIND ZONE II
TYPICAL CROSS SECTIONS
SHOWING TIEDOWN DESIGNS
FIGURE 1.0

SIDEWALL TIEDOWN SPACING

HOME WIDTH	SIDE OVERHANG	I-BEAM O.C. SPACING	SIDEWALL HEIGHT	ZONE 2 SPACING
164"	5"	99.5"	90"	8'
184"	5"	99.5"	90"	8'

CHART 1.0

COPYRIGHT © 1994
PATRICK M. McGUIRE, P.E.
ALL RIGHTS RESERVED

CLIENT: PATRIOT HOMES

1180.2

SEPTEMBER 20, 1994

PATRIOT HOMES

DESCRIPTION: TIE-DOWN BUCKLE/STRAP VERTICAL TIE-DOWN INSTALLATION DETAIL

REV. DATE:		APPROVED BY:	DRAWN BY: KAG DATE: 9/23/1994 REV. DATE:
REV. DATE:			
REV. DATE:		CAD SIZE:	LINE: STRAPRAP
REV. DATE:			

APPROVED BY NA INC FEDERAL MANUFACTURED HOME CONSTRUCTION AND SAFETY STANDARDS DEC 6 1995

EXTERIOR / MARRIAGE WALL

FLOOR

1 1/2" X 9" 11 Ga STEEL ANGLE

VERTICAL STRAP TO ANCHOR

TIE-DOWN BUCKLE (MINUTE MAN # MMA 25)

ANGLE INSTALLED BY MFGR. MAY NEED BE LOOSENED FOR STRAP AND BUCKLE INSTALLATION AND RE-TIGHTENED WHEN COMPLETED. STRAP AND BUCKLE SUPPLIED BY INSTALLER.

INSTALLED PER MINUTE MAN'S INSTRUCTIONS

NOTE: VERTICAL TIE-DOWNS REQUIRED FULL LENGTH OF SIDEWALL AND AT MARRIAGE WALL UNDER COLUMN STUDS WHEN REQUIRED. ANGLE INSTALLED BY MFGR UNDER MARRIAGE COLUMNS WHEN VERTICAL TIE-DOWN REQUIRED.

PATRICK M. McGUIRE REGISTERED No. 17446 STATE OF INDIANA PROFESSIONAL ENGINEER

Patrick M. McGuire 12-6-95

APPLICABLE TO WIND ZONE 2 ONLY

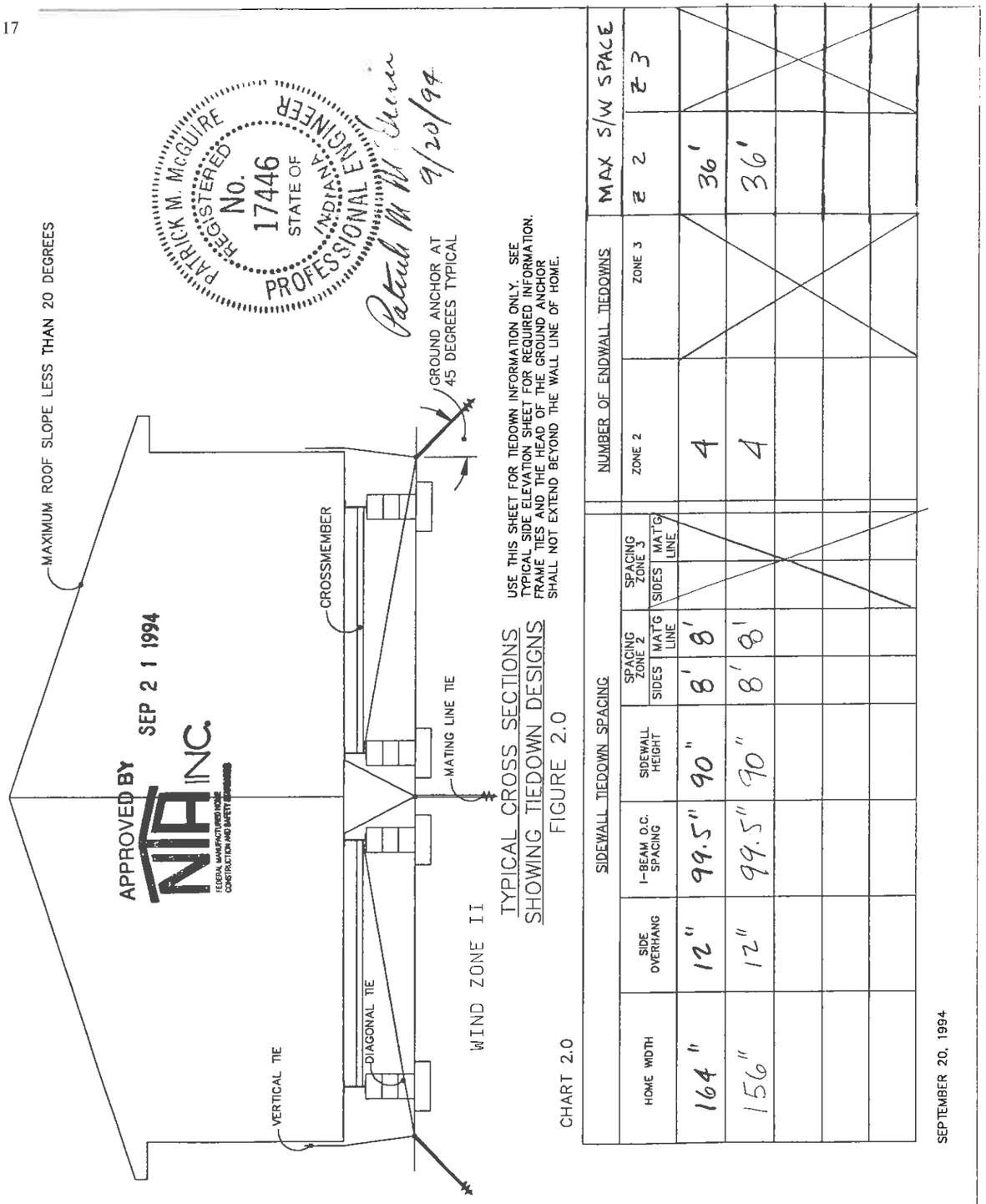

TYPICAL CROSS SECTIONS SHOWING TIEDOWN DESIGNS
FIGURE 2.0

USE THIS SHEET FOR TIEDOWN INFORMATION ONLY. SEE TYPICAL SIDE ELEVATION SHEET FOR REQUIRED INFORMATION. FRAME TIES AND THE HEAD OF THE GROUND ANCHOR SHALL NOT EXTEND BEYOND THE WALL LINE OF HOME.

CHART 2.0

SIDEWALL TIEDOWN SPACING								NUMBER OF ENDWALL TIEDOWNS		MAX S/W SPACE	
HOME WIDTH	SIDE OVERHANG	I-BEAM O.C. SPACING	SIDEWALL HEIGHT	SPACING ZONE 2 SIDES	SPACING ZONE 2 MAT'G LINE	SPACING ZONE 3 SIDES	SPACING ZONE 3 MAT'G LINE	ZONE 2	ZONE 3	ZONE 2	ZONE 3
164"	12"	99.5"	90"	8'	8'			4		36'	
156"	12"	99.5"	90"	8'	8'			4		36'	

SEPTEMBER 20, 1994

PATRICK M. McGUIRE REGISTERED No. 17446 STATE OF INDIANA PROFESSIONAL ENGINEER
9/20/94

APPROVED BY NTA INC. SEP 21 1994
FEDERAL MANUFACTURED HOME CONSTRUCTION AND SAFETY STANDARDS

COPYRIGHT © 1994
PATRICK M. McGUIRE, P.E.
ALL RIGHTS RESERVED

CLIENT: PATRIOT HOMES

1180.3

PROCEDURE FOR ERECTING HINGED ROOF

Note: Roof must be in upright position before joining units.

1. Remove fasteners that hold the hinged kingpost member to the fixed section of the kingpost. Care should be taken to not damage any lumber members or hinge plates.
2. Using car bumper jacks or similar equipment, lift roof into upright position. Jacks must be capable of 36" of lift. Care should be taken to jack the roof evenly, do not jack any area higher than another or damage will occur. Jacks should be placed 10' from ends and approximately 16' between.
3. As the roof is raising, the hinged kingpost member should start dropping into position. Raise the roof until the hinged member rests on top of the lower fixed section of the kingpost.
4. Using a 1x4x16" splice block, join the hinged kingpost section to the fixed. Fasten the 1 splice block to each truss with (4) 8d nails each side of the joint.
5. Splice gable fascia board with 1x6x16" at hinge joint area fastened with (4) 8d nails each side of joint.
6. Complete standard set-up procedure.

Note: If the hinge on the kingpost of the truss becomes damaged for any reason, the hinge must be repaired with a 4" x 8" piece of CDX plywood fastened to the top chord and kingpost with (2) 8d nails into each. Apply this splice block to each side of the truss. If any trusses are damaged by the manufacturer, the plywood splices will be shipped with the home. Please inspect each roof for damaged hinges and make corrections prior to mating the home.

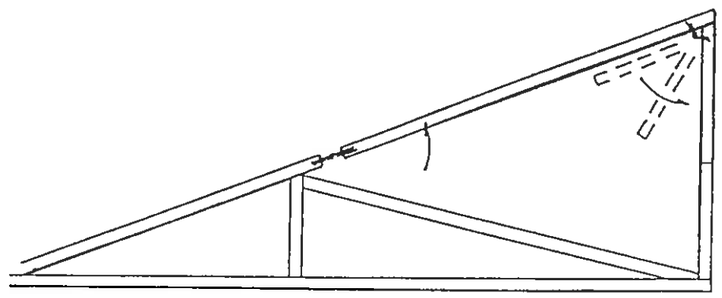

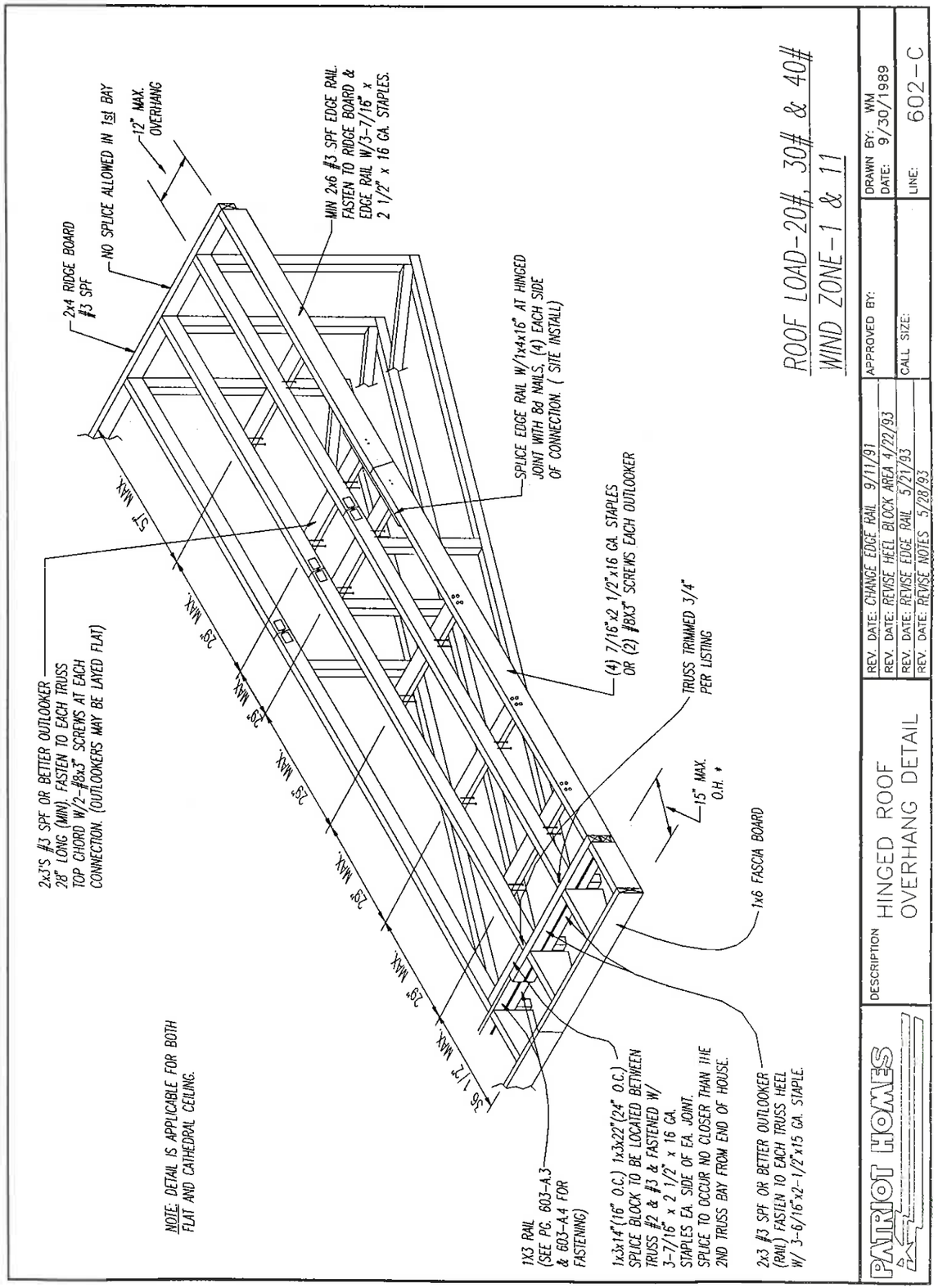

PATRIOT HOMES

CHART OF TIE-DOWN INSTALLATION DIMENSIONS
VERSION 1.2 03/18/91 PATRICK M. MCGUIRE
04-15-1991 COPYRIGHT (C) 1988

Zone I
(All Units)

50 DEGREES MAXIMUM SPECIFIED ANGLE FROM VERTICAL

45 DEGREES MINIMUM SPECIFIED ANGLE FROM VERTICAL

PIER HEIGHT	X MAXIMUM	X MINIMUM
8	9	7
10	11	9
12	14	11
14	16	13
16	19	15
18	21	17
20	23	19
22	26	21
24	28	23
26	30	25
28	33	27
30	35	29
32	38	31
34	40	33
36	42	35

COMMONWEALTH OF PENNSYLVANIA
REGISTERED PROFESSIONAL ENGINEER
PATRICK M. McGUIRE
No. 32011-E

ALL DIMENSIONS ARE IN INCHES

PIER HEIGHT is the vertical distance from the top of the tie down strap to the ground

X (MAX OR MIN) is the level horizontal distance from the edge of the I beam to the head of the anchor

THE HEAD OF THE ANCHOR SHALL NOT BE INSTALLED OUTSIDE THE SKIRT

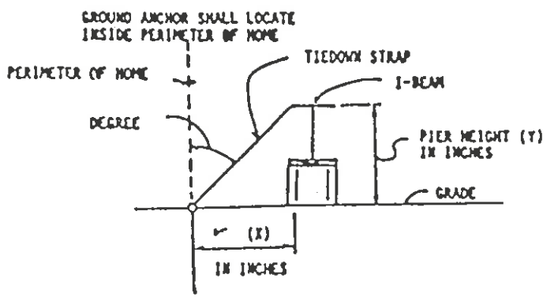

NOTE: IF PIER & TIEDOWN INSTALLATION CAN NOT BE INSTALLED PER THE ABOVE CRITERIA, A LOCAL PROFESSIONAL ENGINEER SHALL BE CONSULTED FOR THE APPLICATION USED.

APPROVED BY
NTA INC.
MAY 14 1991
FEDERAL MANUFACTURED HOME CONSTRUCTION AND SAFETY STANDARDS.

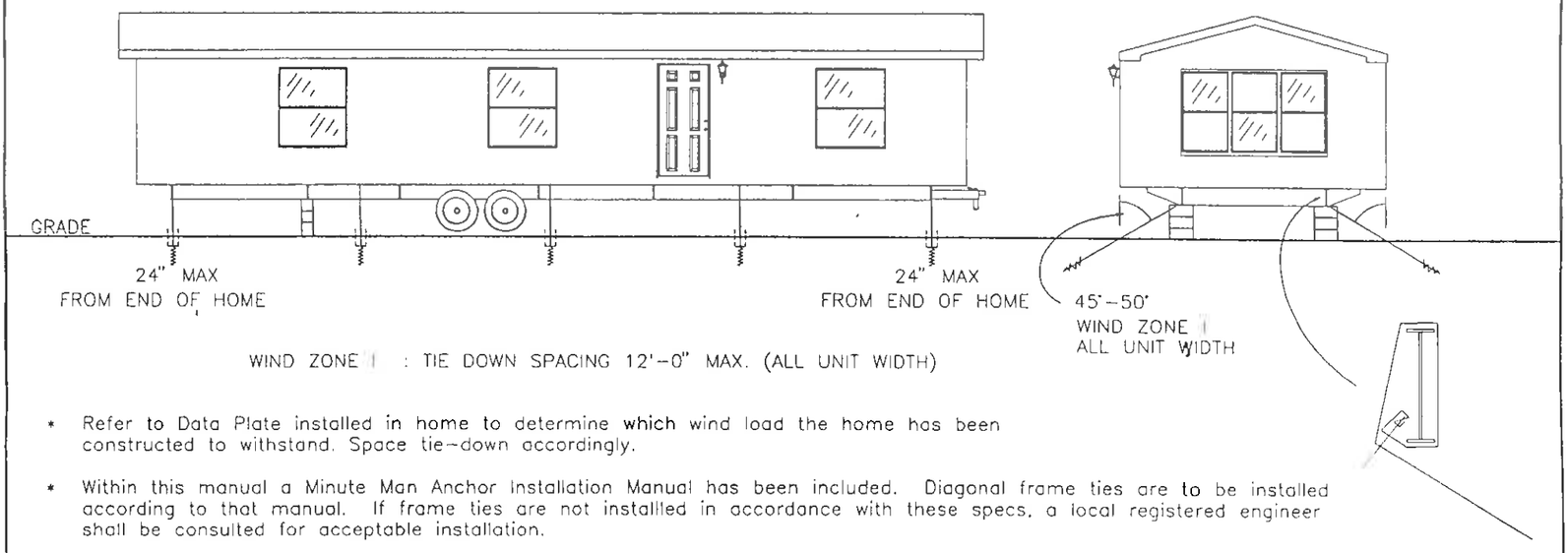

WIND ZONE I : TIE DOWN SPACING 12'-0" MAX. (ALL UNIT WIDTH)

* Refer to Data Plate installed in home to determine which wind load the home has been constructed to withstand. Space tie-down accordingly.
* Within this manual a Minute Man Anchor Installation Manual has been included. Diagonal frame ties are to be installed according to that manual. If frame ties are not installed in accordance with these specs, a local registered engineer shall be consulted for acceptable installation.
* Anchors are to be installed per instructions; to full depth, below frost line and augers of tiedowns are to be minimum of 12" above water table. Stabilizer plates to be installed to maximize tie-down holding power.
* Over the roof tie-down straps may be installed in addition by either the manufacturer or the installer. These straps are to be located over the roof truss and sidewall studs beneath the exterior finish material of the home. Straps are to be secured in a manner to hold in position over the truss and sideewall studs without penetrating or damaging the strap. Over the roof ties and diagonal ties can attach to the same anchor provided the anchor is designed withstand the combined forces and installed in a manner that the design requirres. Over the roof tie-down strap material must be of the same material as requried for diagonal ties. Protection is to be provided at sharp corners to prevent straps from damaging home.
* Singlewides requrie both I-beam diagonal tied as illustrated is cross section drawing above. Doublewides require only I-beams tied nearest the sidewalls only. Marriage wall ties are not required to be tied.

NOTE: Any foundation and tie-down system other than these shown shall be designed by a local professional engineer familiar with site conditions.

PATRICK M. McGUIRE REGISTERED No. 17446 STATE OF INDIANA PROFESSIONAL ENGINEER

1179

APPROVED BY NTA INC. FEDERAL MANUFACTURED HOME CONSTRUCTION AND SAFETY STANDARDS JUL 13 1994

Patrick M. McGuire 7/12/94

PATRIOT HOMES	DESCRIPTION: TIE-DOWN DESIGN WIND ZONE I ALL UNIT WIDTH	REV. DATE:	APPROVED BY:	DRAWN BY: JBS REV. DATE: DATE: 7/11/1994
		REV. DATE:		
		REV. DATE:	CALL SIZE:	LINE: PG1179.DWG
		REV. DATE:		

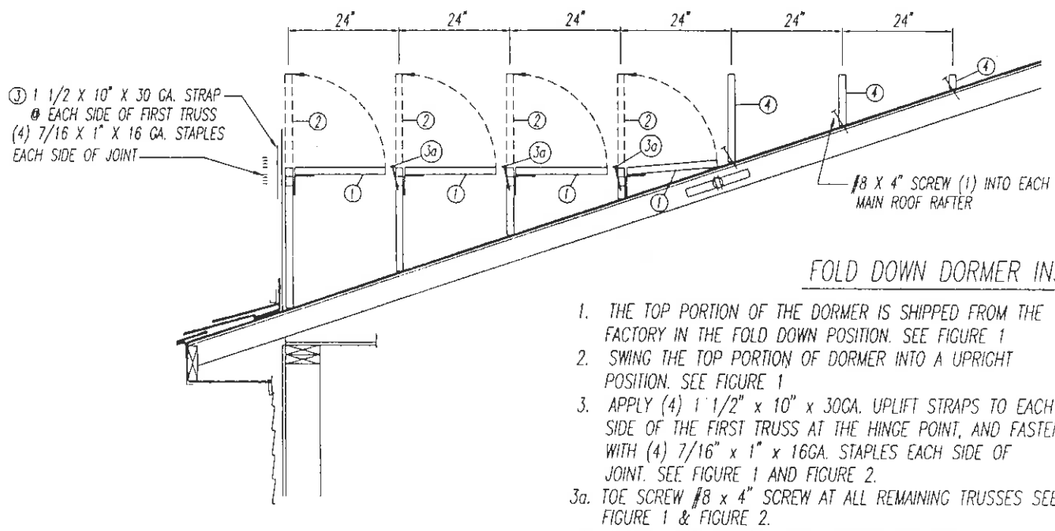

FIGURE-1

APPROVED BY NTA INC. FEDERAL MANUFACTURED HOME CONSTRUCTION AND SAFETY STANDARDS FEB 10 1995

FOLD DOWN DORMER INSTALLATION INSTRUCTIONS

1. THE TOP PORTION OF THE DORMER IS SHIPPED FROM THE FACTORY IN THE FOLD DOWN POSITION. SEE FIGURE 1
2. SWING THE TOP PORTION OF DORMER INTO A UPRIGHT POSITION. SEE FIGURE 1
3. APPLY (4) 1 1/2" x 10" x 30GA. UPLIFT STRAPS TO EACH SIDE OF THE FIRST TRUSS AT THE HINGE POINT, AND FASTEN WITH (4) 7/16" x 1" x 16GA. STAPLES EACH SIDE OF JOINT. SEE FIGURE 1 AND FIGURE 2.

3a. TOE SCREW #8 x 4" SCREW AT ALL REMAINING TRUSSES SEE FIGURE 1 & FIGURE 2.

4. INSTALL THE SHIPPED LOOSE DORMER RAFTERS (QUANTITY OF 3) TO THE TOP HINGED PORTION OF THE MAIN ROOF. SEE FIGURE 1 FOR FASTENING AND SPACING. SEE FIGURE 1
5. INSTALL UPPER PORTION OF DORMER OVERHANG. SEE FIGURE 2.
6. INSTALL 2 x 4 #2 SPF OR BETTER OUTLOOKER. SEE FIGURE 2.
7. INSTALL 7/16" BLANDEX ROOF SHEATING TO UPPER PORTION OF DORMER WITH 7/16" x 1 1/2' X 16GA. STAPLES AT 4" ON EDGES AND 8" INTERMEDIATE. SEE FIGURE 2.
8. INSTALL DRIP EDGE. SEE FIGURE 2.
9. INSTALL UNDERLAYMENT IN THE VALLEY. FIRST CENTER A 36-INCH WIDE STRIP OF ASPHALT SATURATED FELT IN THE VALLEY AND SECURE IT WITH ONLY ENOUGH NAILS TO HOLD IT IN PLACE. THEN TRIM THE HORIZONTAL COURSES OF FELT UNDERLAYMENT APPLIED ON THE ROOF TO OVERLAP THE VALLEY STRIP AT LEAST 6 INCHES. SEE FIGURE 3.
10. WITH VALLEY FLASHING ALREADY IN PLACE, APPLY THE FIRST COURSE OF SHINGLES ALONG THE EAVES OF ONE OF THE INTERSECTING ROOF PLANES AND ACROSS THE VALLEY. FOR PROPER FLOW OF WATER OVER THE TRIMMED SHINGLE, ALWAYS START APPLYING THE SHINGLES ON THE ROOF PLANE THAT HAS THE LOWER SLOPE OR LESSER HEIGHT. EXTENED THE END SHINGLES AT LEAST 12 INCHES ONTO THE ADJOINING ROOF. APPLY SUCCEEDING COURSES IN THE SAME MANNER, EXTENDING THEM ACROSS THE VALLEY AND ONTO THE ADJOINING ROOF. PRESS THE SHINGLES TIGHTLY INTO THE VALLEY. USE NORMAL SHINGLE FASTENING METHODS EXCEPT THAT NO FASTENER SHOULD BE WITHIN 6 INCHES OF THE VALLEY CENTERLINE AND TWO FASTENERS SHOULD BE PLACED AT THE END OF EACH SHINGLE CROSSING THE VALLEY.

THEN APPLY SHINGLES ON THE ADJOINING ROOF PLANE, STARTING ALONG THE EAVES AND CROSSSING THE VALLEY ONTO THE PREVIOUSLY-APPLIED SHINGLES. TRIM THE SHINGLES BEING INSTALLED NO LESS THAN 2 INCHES BACK FROM THE VALLEY CENTERLINE. FOLLOWING A CHALK LINE SNAPPED OVER THE SHINGLES TO ENSURE A NEAT INSTALLATION. TRIM ONE INCH ON A 45-DEGREE ANGLE FROM THE UPPER CORNER OF EACH END SHINGLE TO DIRECT WATER INTO THE VALLEY. FINALLY, EMBED EACH END SHINGLE IN A 3-INCH-WIDE STRIP OF ASPHALT PLASTIC CEMENT. SEE FIGURE 4.

11. INSTALL SIDING, SOFFIT AND ALUMINUM FASCIA. SEE FIGURE 2.

1183

PATRIOT HOMES	DESCRIPTION: FOLD DOWN DORMER INSTALLATION	REV. DATE: REVISED FASTENING @ HINGE 12-27-94	APPROVED BY:	DRAWN BY: EES REV. DATE: DATE: 12/15/1994 12/27/1994
		REV. DATE:		
		REV. DATE:	CALL SIZE:	LINE: DMRINSTL
		REV. DATE:		

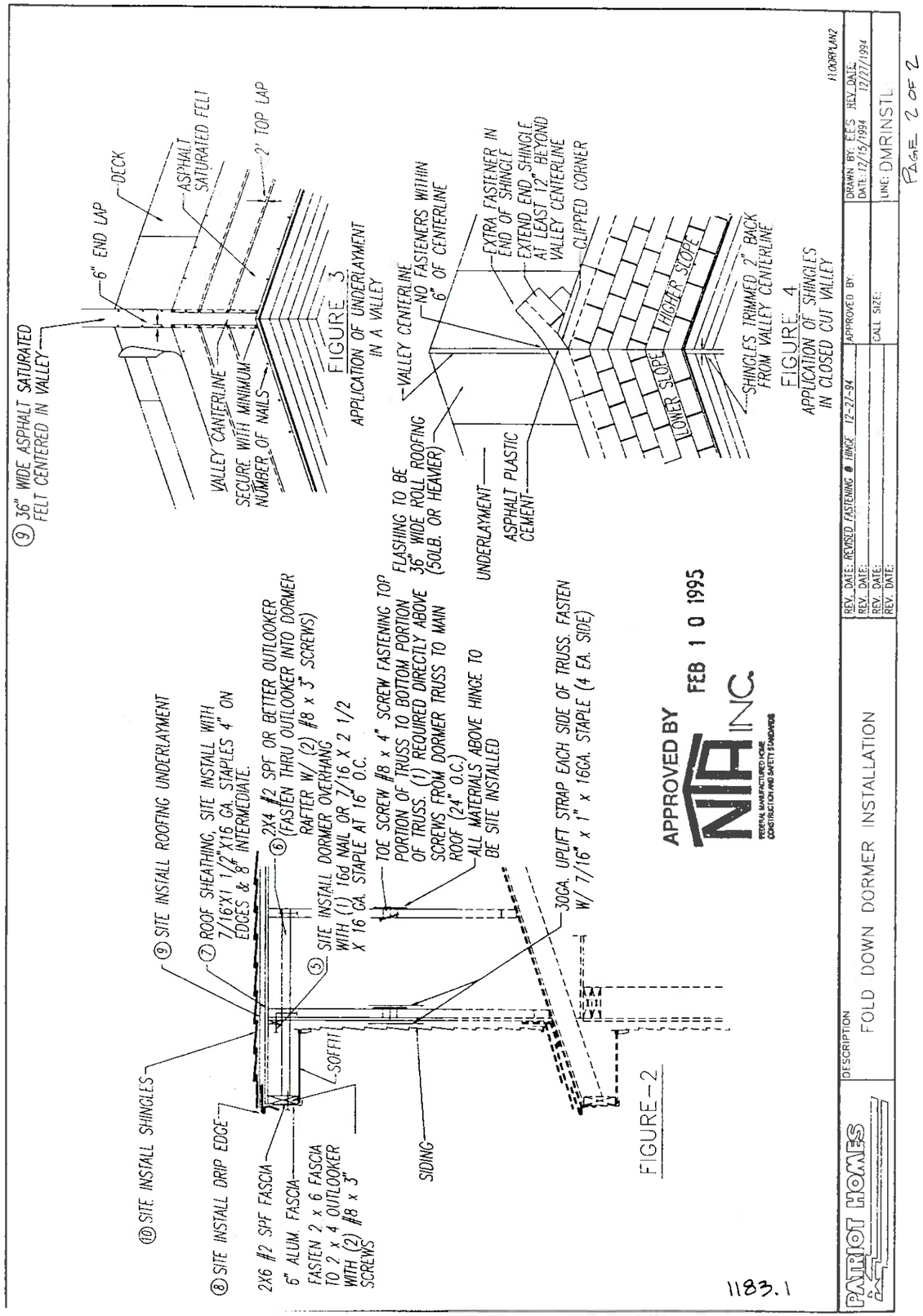

7. At six months and one year after permanent set-up, the home should be checked at the exterior door area to insure it is level and plumb. Check and re-caulk around exterior outer frame screw flange, if necessary.

8. Another area that is quite often the result of unwarranted service is the misunderstanding of the home owners in regard to "pre-set camber" in exterior doors.

   We set approximately a 3/16" to 1/4" bend on the core of our door system which is called "pre-set camber". This feature allows the core to seal tightly against the jamb frame. The top and bottom edge of the core hits the jamb first and then because of the small pressure applied at the lockset, the door seals tight against light and air leakage.

   Many customers confuse this small pre-set camber bend with warpage. Communicating this feature to the home owner would also reduce the number of requests for service as well.

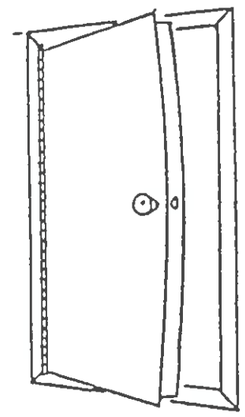

Warp or Reverse Camber

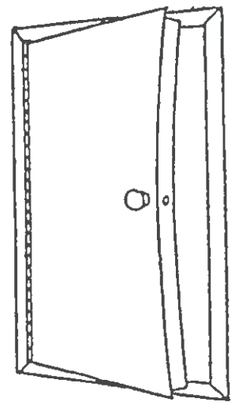

Proper Camber

SPECIAL PIER BLOCKING OF EXTERIOR DOORS

Failure or damage to the door, as a result of improper leveling/support around the door areas on the "Sales Center" dealer lot would void the door warranty.

"At the Retail Customer Final Set-Up."

The following recommendations for pier location, only applies to the door area. There are other piers the home manufacturer recommends. The manufacturers instructions should be followed as regards other piers, as to the number and their location.

1. **Piers should be located under the jamb stud on the hinge side of any exterior door over 24" wide. Failure to do so would void the warranty. Piers shall have footings that extend below the frost line. Piers installed without footings are not acceptable.**

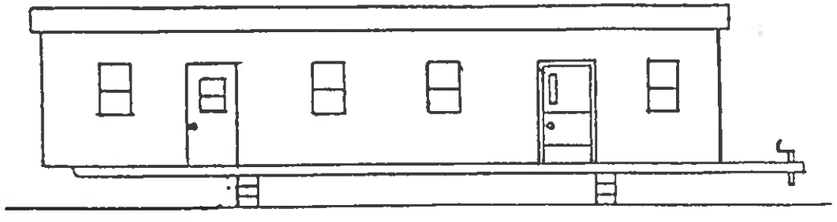

2. **Piers should be used under jamb studs on both side of sidewall openings larger than 4 feet wide. Failure to do so would void the warranty.**

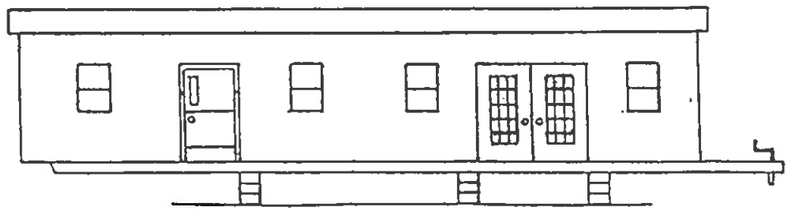

3. **Exterior doors should be checked to see that they operate freely without binding after completion of leveling and set-up.**

4. **After completion of the leveling and set-up, the floor must be level and the walls must be plumb in all areas around exterior doors.**

5. **Make the necessary adjustments to the door strike plates, threshold (if adjustable), hydraulic closures or safety chain, to assure proper operation and seal after completion of leveling and set-up.**

6. **The door system must be caulked around exterior of door outer frame, screw flange. Special caution must be given to insure top outer frame screw flange is heavily caulked.**

INST35.MAN ELECTRICAL CONNECTION (MAIN)

The following information is to be reviewed to determine the junction box size, raceway size and conductor size required in hook-up to an electrical supply.

JUNCTION BOX SIZE

For angle pulls the distance between each raceway entry inside the box and the opposite wall of the box shall not be less than six times the trade diameter of the largest raceway.

For straight pulls, the length of the box shall not be less than eight times the trade diameter of the largest raceway.

Note - For angle pulls: if one of the raceway entries is opposite a cover the distance between the entry and the cover may be less than indicated above, but shall not be less than given in the following table:

Size of Feeder Conductors to Be Installed, AWG or MCM	Distance Raceway Entry to 'Cover, In.
4-3	2
2	2-1/2
1	3
1/0-2/0	3-1/2
3/0-4/0	4
250	4-1/2
300-350	5

RESIDENTIAL MANUFACTURED HOME FIXED FEEDER SUPPLY (Base on 1993 NEC) REQUIRED FEEDER RACEWAY SIZE AND MARKING FOR CONDUCTOR SIZE.

Feeder raceway sized for copper, 75C rated conductors, Types RH, RHH, RHW, THW, THWN, THHN OR XHHW, size no. SEE BELOW Awg circuit conductors and size no. SEE BELOW Awg grounding conductor.

Feeder Raceway Size

Maximum Load and Main Breaker or Fuse, Amp	Minimum Conduit Trade Size, In.
100	1-1/4
200	2

Conductor Size

Maximum Load and Main Breaker of Fuse, Amp	Two Line and One Neutral Conductor Size, AWG or MCM	Grounding Conductor Size, AWG
100	4	8
200	2/0	6

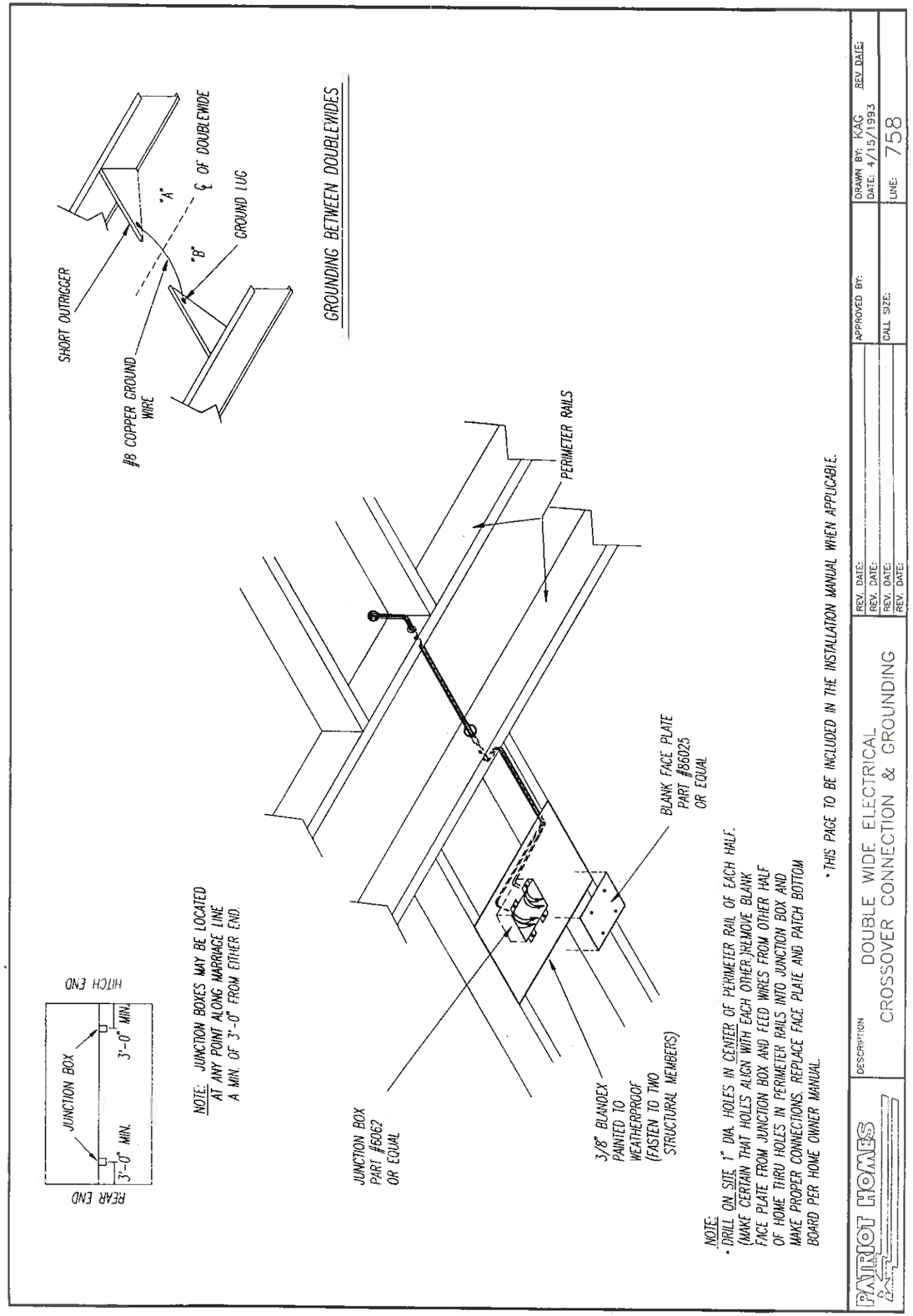

INST14.MAN

APPROVED BY NTA INC. REV. SEP 1 4 1994
FEDERAL MANUFACTURED HOME CONSTRUCTION AND SAFETY STANDARDS

BLOCKING & LEVELING

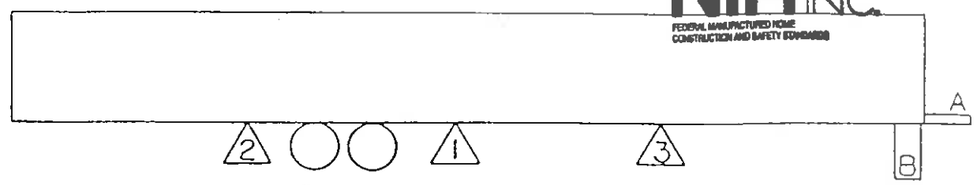

FIG. III

1. Position unit "A" in area where it is to be set up.
2. Place level (A) on hitch.
3. Place jack (B) approx. 2' from front of home raising home 2"-4" above level.
4. Place support (1) as indicated and level from side to side.
5. Lower front end of home and place support (2) as indicated and level. Insulate around ends, floors, and ceiling line with the insulation provided in the unit.
6. With front end raised, place support (3) and level.
7. By raising and lowering home place remaining supports.
8. Adjustments for leveling may be made with the use of wedges.
9. Remove protective shipping vinyl.
10. Move unit (B) into position as close to (A) as possible and remove shipping vinyl.
11. Slide (B) closely to (A) using come-a-longs. Paneling and/or visqueen under tires assist sliding.
12. Place jacks under (B) and raise to same level as (A). Align floors both end to end and flush decking to match (A) to (B). Tighten floor together with come-a-longs and lag perimeter joist of (A) to (B) with 3/8"x6" lag, toe fastened with 1 1/2" min. penetration of lag at spacing: Wind Zone I : 58" max.
    Wind Zone II: 22" max.
13. Shim blocks/piers as required. Slight racking of (A) and (B) may be required to align roof and endwalls. Fasten endwalls together with 16d nails at 2 1/2" o.c. or #8x3" screws at 3 1/2" o.c. with penetration to be 1 1/2".
14. Check (B) for levelness. Adjust as necessary. Do not over adjust blocking as structure could be damaged.
15. Lag 2x4 at roof peaks together with 3/8"x6" lag, toe fastened with min. 1 1/2" penetration of lag.
    Spacing: Wind Zone I : 32" o.c. maximum
    Wind Zone II: 20" o.c. maximum

NOTE: Singlewide units; use steps 1 thru 8.

PERIODIC RE-LEVELING OF HOME

There is always the possibility that a manufactured home may settle after it has been in position for a period of time. When settling does occur, it can affect the proper closing of doors, windows and cabinets as well as place undue strain on structural portions of the home. When these conditions are apparent, releveling of the home will give the desired results and alleviate future problems.

The local inspection authorities are to examine all structural interconnection of the two halves of the double wide units.

PATRICK M. McGUIRE
REGISTERED
No. 17446
STATE OF INDIANA
PROFESSIONAL ENGINEER

Patrick M. McGuire
8/30/95

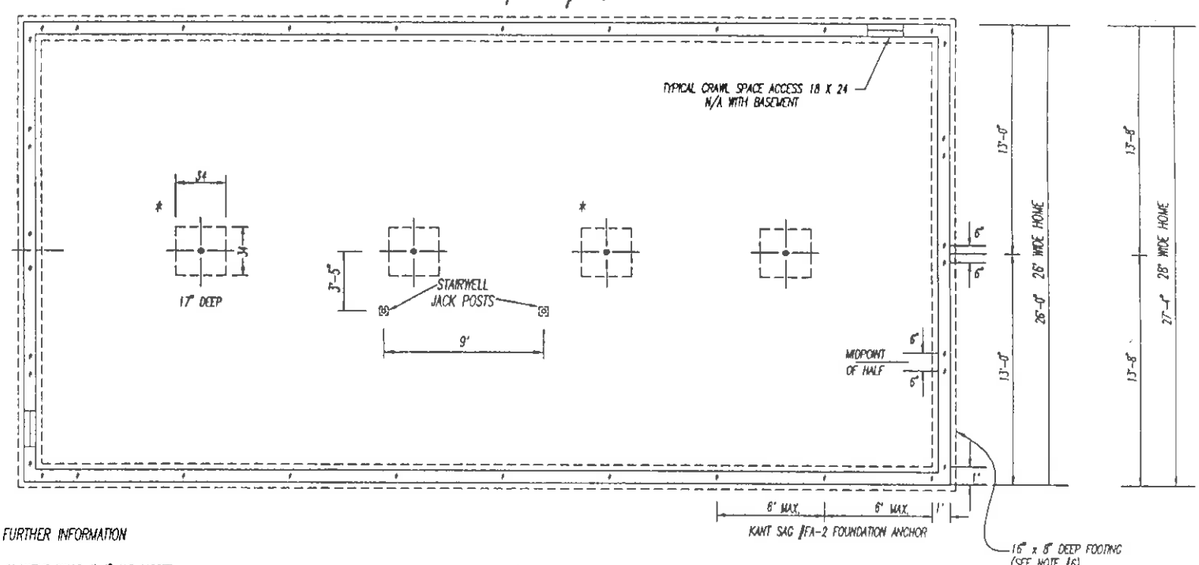

1175.6

SEE CROSSECTION DRAWING FOR FURTHER INFORMATION

NOTES:
1.) COLUMNS LOCATED UNDER EACH SIDE OF OPENINGS IN MATING WALLS 4'-0" AND LARGER.
2.) KANT SAG #FA-2 FOUNDATION ANCHOR @1' FROM CORNER & @6'-0" O.C. AROUND PERIMETER. (SEE ENDWALL)
3.) PROVIDE POSITIVE UNDERFLOW DRAINAGE MIN. 4" PEA GRAVEL & 8 MIL POLY VAPOR BARRIER.
4.) TYPICAL 8" X 16" FOUNDATION VENTS OR BASEMENT WINDOWS LOCATED WITHIN 3'-0" OF EACH CORNER OF CRAWL SPACE. OPENINGS SHALL BE COVERED WITH A CORROSIVE RESISTANT WIRE MESH NOT GREATER THAN 1/2" NOR LESS THAN 1/4" IN ANY DIRECTION.
5.) VENTILATION PROVIDED EQUAL TO OR GREATER THAN 1 S.F. FOR EACH 150 S.F. OF FLOOR AREA.
6.) DUE TO VARIANCES IN LOCAL CODES, SOIL CONDITIONS AND FROST LEVELS, ALL FOUNDATION AND FOOTINGS TO BE REVIEWED BY LOCAL ENGINEER AND APPROVED BY LOCAL BUILDING COMMISSION.
* DENOTES CONCENTRATED COLUMN SUPPORT LOADS. THESE COLUMNS ARE NOT TO BE RELOCATED. NON-COLUMNS MAY BE RELOCATED WITH MAXIMUM SPANS AS INDICATED ON CROSSECTION DRAWING.

FOOTING SIZES GIVEN ARE BASED UPON 2000 PSF SOIL CAPACITY.

APPROVED BY NTA INC.
REV AUG 3 0 1995
FEDERAL MANUFACTURED HOME CONSTRUCTION AND SAFETY STANDARDS

PATRIOT HOMES	DESCRIPTION 26' & 28' WIDE SPANFLOOR FOUNDATION	REV. DATE: REV. DATE: REV. DATE: REV. DATE:	APPROVED BY: CALL SIZE:	DRAWN BY: DS REV DATE: DATE: 7-24-95 DWGNAME: SPANFOUN

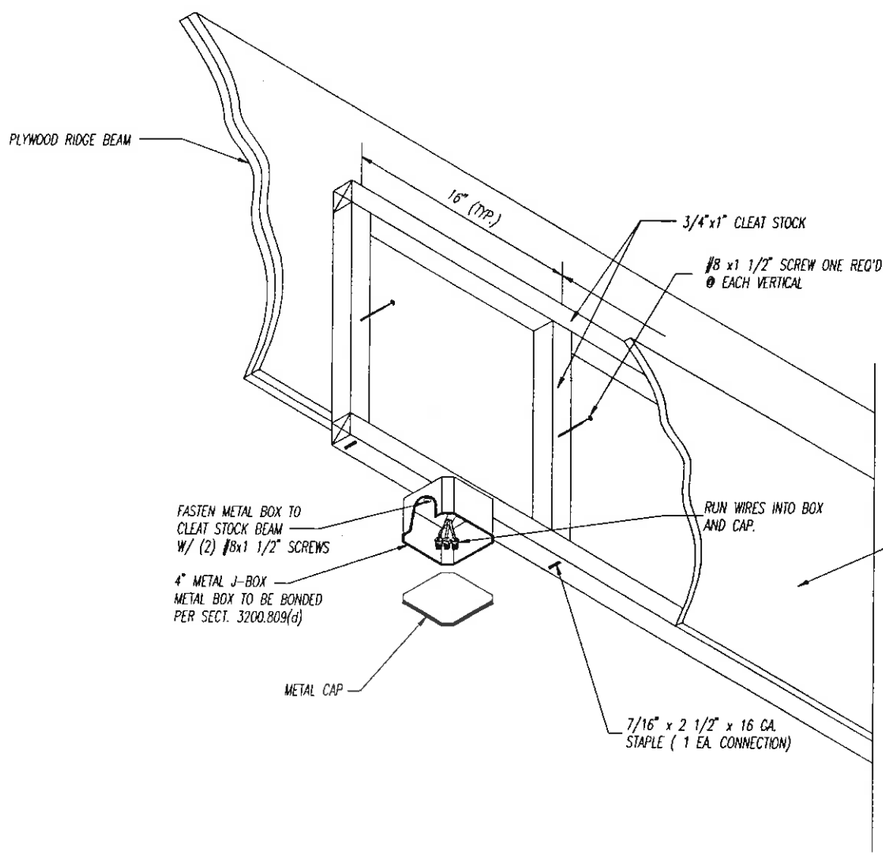

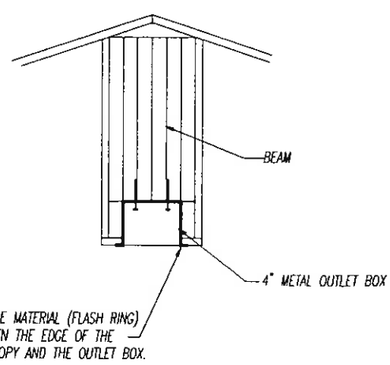

NOTES:
THE OUTLET BOX MUST BE RELOCATED AND SECURED TO A STRUCTURAL MEMBER BEFORE THE FAN IS INSTALLED.

1.) IN ORDER TO INSURE PROPER SUPPORT, USE (4) WOOD (#8x3") SCREWS TO SECURE THE OUTLET BOX TO THE BEAM OR STRUCTURAL MEMBER.
2.) OUTLET BOX MUST BE ABLE TO SUPPORT A HANGING WEIGHT OF 40 LBS. MINIMUM.
3.) FAN SHOULD BE MOUNTED WITH AT LEAST A 6'- 4" OF BLADE CLEARANCE FROM FLOOR.
4.) FOLLOW INSTALLATION INSTRUCTIONS SUPPLIED WITH CEILING FAN.

PATRIOT HOMES	TEMPORARY MOUNTING OF METAL BOX FOR SITE INSTALLATION OF CEILING FAN	REV. DATE: REV. DATE: REV. DATE: REV. DATE:	APPROVED BY: CALL SIZE:	DRAWN BY: B.F. REV DATE: DATE: 4/27/1993 LINE: HOME37

GAS CONNECTION

The gas piping supply system is designed for a pressure not exceeding 14 in. water column and not less than 11 in. water column for LP gas and not to exceed 10.5 in. water column and not less than 7 in. water column for natural gas.

On some double wide manufactured homes, a gas cross-connection is required. When required, use an approved quick-disconnect for external use.

WATER CONNECTION

The manufactured home is designed for inlet water pressure of 80 PSI and when the water pressure exceeds 80 PSI, a pressure reducing valve shall be installed.

If not supplied with home, a master cold water shutoff valve is to be installed in the water supply line.

All water supply plumbing that is exposed to freezing shall have a heat tape installed on site. A receptacle is located at the inlet location for this purpose. The heat tape must be listed for use for manufactured homes and only installed per the instructions supplied with the heat tape.

CLOTHES DRYERS (Vent Installation)

1. If a clothes dryer is to be installed, the dryer vent must be extended to the outside of the home.
2. A 4" flex duct is to be installed after the home is set-up at the site.
3. The 4" flex duct is to be held in place with metal straps spaced 24" o.c. and secured to the bottom of the floor joists or frame.
4. The termination cap is to be fastened to the bottom of the home or skirting.

EXTERIOR LIGHT FIXTURE INSTALLATION

* Be sure that all pertaining circuit breakers are in "OFF" position.

1. Pull wires from wiring box, making sure there is always 4" of free conductor to make connection.
2. Strip wire, being sure not to scratch or mar coating on wire.
3. Connect black and white wires in box to two insulated wire on fixture, twisting wire together to insure a good connection, and twist on appropriate wire connector.
4. Pigtail two ground wires together and use appropriate copper connector and crimp wires together. Leave one ground wire longer so that only one wire is fastened to ground screw.
5. Mount fixture to side of unit, using putty tape to seal inside from weather.

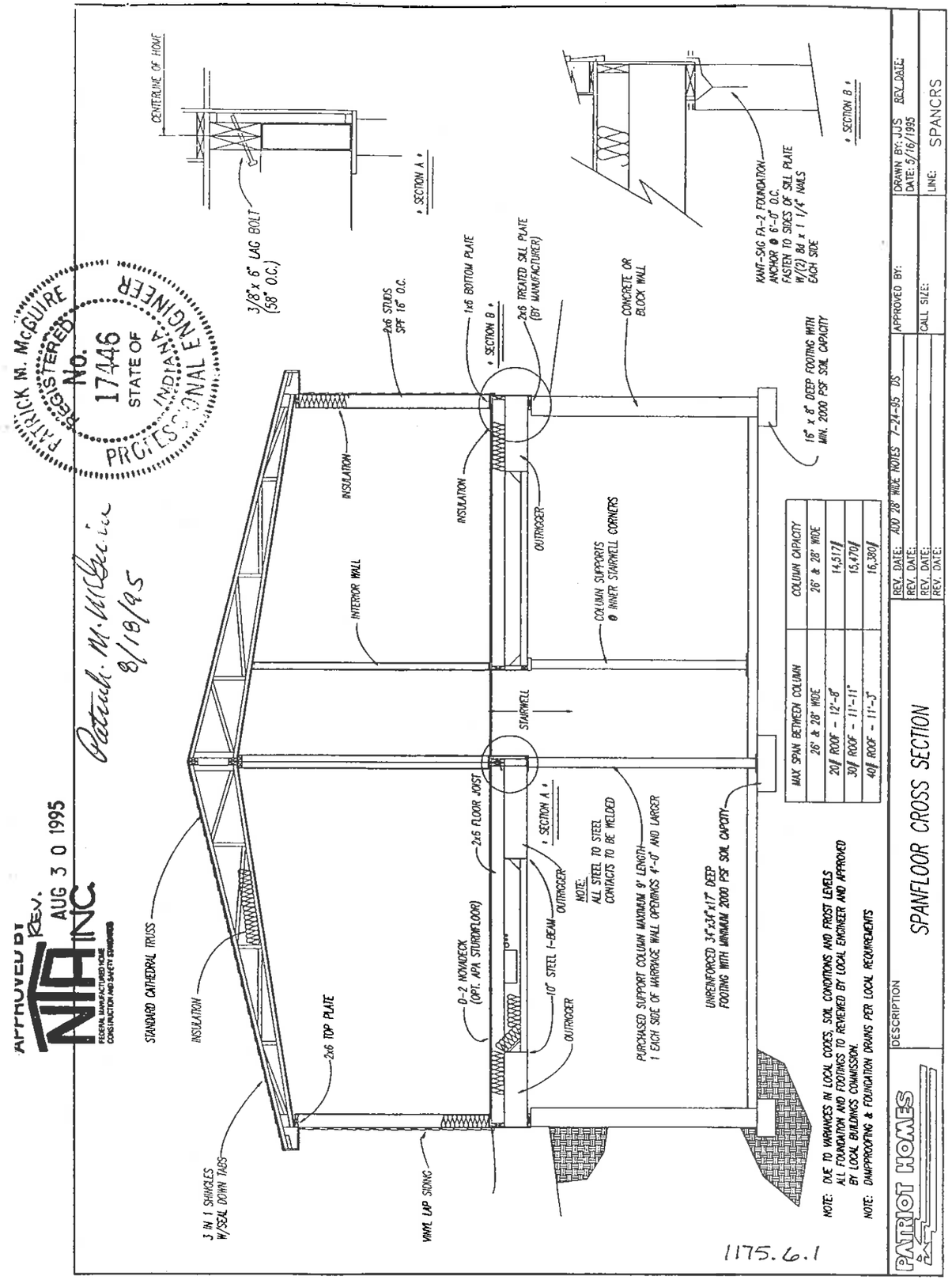

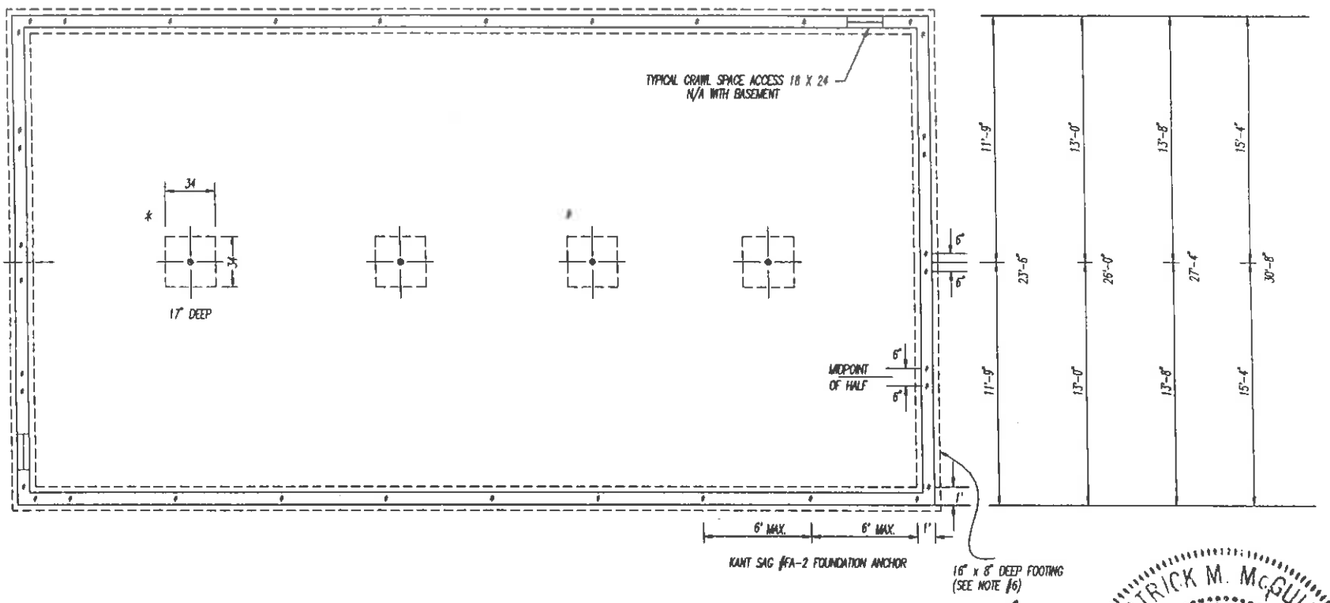

NOTES:
1.) COLUMNS LOCATED UNDER EACH SIDE OF OPENINGS IN MATING WALLS 4'-0" AND LARGER.
2.) KANT SAG #FA-2 FOUNDATION ANCHOR @1' FROM CORNER & @6'-0" O.C. AROUND PERIMETER. (SEE ENDWALL)
3.) PROVIDE POSITIVE UNDERFLOW DRAINAGE MIN. 4" PEA GRAVEL & 6 MIL POLY VAPOR BARRIER.
4.) TYPICAL 8" X 16" FOUNDATION VENTS OR BASEMENT WINDOWS LOCATED WITHIN 3'-0" OF EACH CORNER OF CRAWL SPACE. OPENINGS SHALL BE COVERED WITH A CORROSIVE RESISTANT WIRE MESH NOT GREATER THAN 1/2" NOR LESS THAN 1/4" IN ANY DIRECTION.
5.) VENTILATION PROVIDED EQUAL TO OR GREATER THAN 1 S.F. FOR EACH 150 S.F. OF FLOOR AREA.
6.) DUE TO VARIANCES IN LOCAL CODES, SOIL CONDITIONS AND FROST LEVELS, ALL FOUNDATION AND FOOTINGS TO BE REVIEWED BY LOCAL ENGINEER AND APPROVED BY LOCAL BUILDING COMMISSION.
* DENOTES CONCENTRATED COLUMN SUPPORT LOADS. THESE COLUMNS ARE NOT TO BE RELOCATED. NON-COLUMNS MAY BE RELOCATED WITH MAXIMUM SPANS AS INDICATED ON CROSSECTION DRAWING.

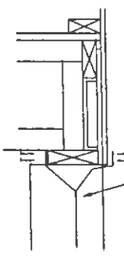

Patrick M. McGuire
1-24-95

KANT-SAG FA-2 FOUNDATION ANCHOR @6'-0" O.C. FASTEN TO SIDES OF SILL PLATE W/(2) 8d X 1 1/4" NAILS EACH SIDE

PATRICK M. McGUIRE REGISTERED No. 17446 STATE OF INDIANA PROFESSIONAL ENGINEER

SEE CROSSECTION DRAWING FOR FURTHER INFORMATION

PATRIOT HOMES	DESCRIPTION: PERIMETER FRAME TRUSS FLOOR TYPICAL FOUNDATION	REV. DATE: ADD 32 WIDE 1-95 DS REV. DATE: REV. DATE: REV. DATE:	APPROVED BY: CALL SIZE:	DRAWN BY: DATE: LINE: PHFOUND

DWV PIPE SYSTEMS–SOLEVENT WELDING INSTRUCTIONS FOR ABS

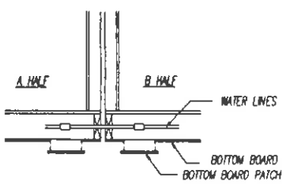

REMOVE BOTTOM BOARD PATCH FROM BOTH HALVES OF HOUSE- LOCATE WATER LINES AND FEED LINE THRU PRE-DRILLED HOLES IN SIDE RAIL INTO FLOOR CAVITY OF MATING HALF. MAKE CONNECTIONS AND CHECK FOR LEAKS AND THEN RE-APPLY PATCHES

INSTALLATION: ABS

JOINT STRENGTH–PROPERLY JOINED, ABS PIPE AND FITTINGS PRODUCE PRESSURE TIGHT JOINTS, EITHER IN SHOP OPERATIONS OR IN THE FIELD. HOWEVER, SKILL AND KNOWLEDGE ARE REQUIRED IN ORDER TO OBTAIN GOOD QUALITY JOINTS. THE FOLLOWING IS AN INSTALLATION PROCEDURE THAT, WHEN CLOSELY, WILL HELP INSURE A PRESSURE TIGHT JOINT.

APPROVED BY NTA INC. REV. OCT 1 9 1994

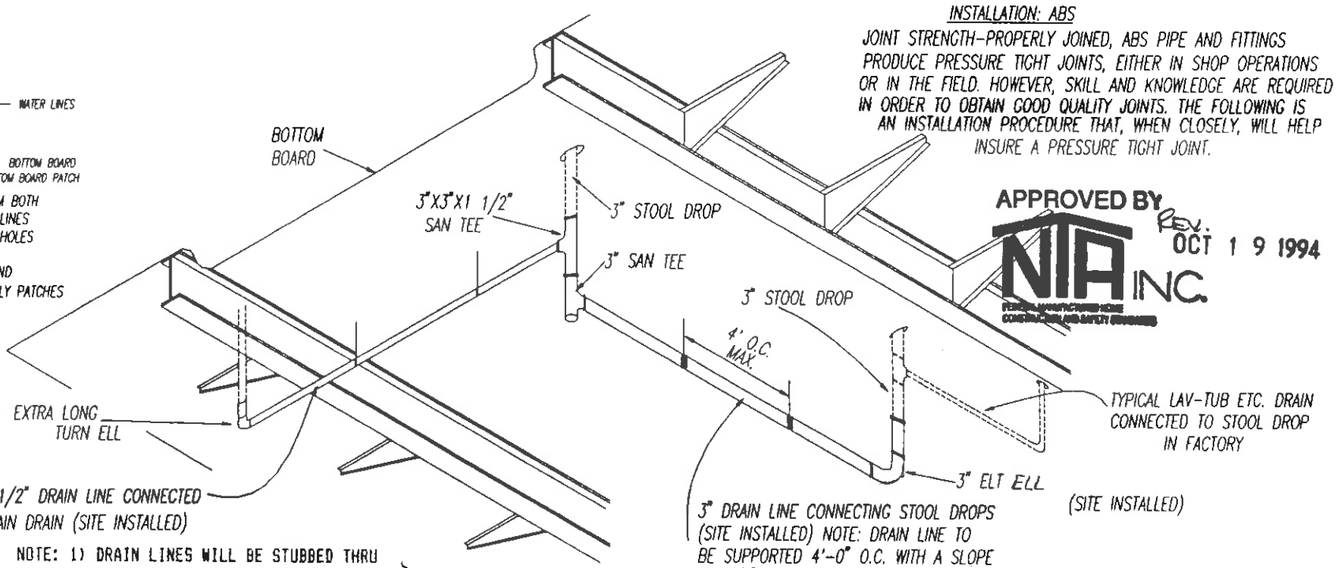

NOTE: 1) DRAIN LINES WILL BE STUBBED THRU BOTTOM BOARD AND CAPPED. REMOVE CAPS AND CONNECT DRAIN LINES AS SHOWN USING PIPE, FITTINGS, CEMENT AND SUPPORTS SHIPPED LOOSE WITH THE HOUSE.

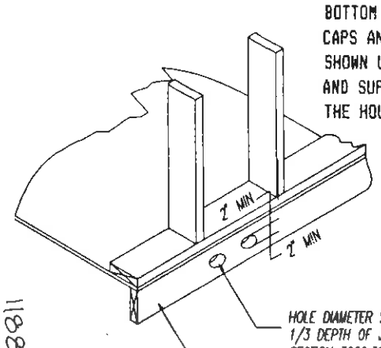

HOLE DIAMETER SHALL NOT EXCEED 1/3 DEPTH OF JOIST PER SECTION 3280.305(g)(3)(iii) DRILL ROUND HOLES. ELONGATED HOLES ARE NOT ACCEPTABLE.

1188

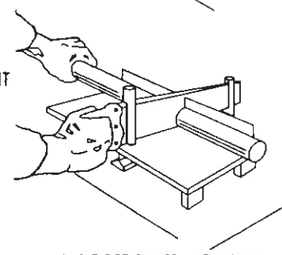

1. CUT PIPE SQUARE. USE SAW AND MITRE BOX OR PLASTIC TUBE CUTTER. REMOVE ALL BURRS FROM BOTH THE INSIDE AND OUTSIDE OF THE PIPE WITH A KNIFE, FILE OR REAMER. REMOVE DIRT, GREASE, AND MOISTURE. A THOROUGH WIPE WITH A CLEAN RAG IS USUALLY SUFFICIENT. CHECK DRY FIT. FOR PROPER INTERFERENCE FIT, PIPE SHOULD GO EASILY INTO FITTING 1/4 TO 3/4 OF THE WAY.

2. USING A SUITABLE APPLICATOR, APPLY A MODERATE EVEN COAT OF CEMENT TO THE FITTING SOCKET. (CARE SHOULD BE TAKEN NOT TO ALLOW SOLVENT CEMENT TO PUDDLE IN FITTING SOCKET.) APPLY A LIBERAL COAT OF CEMENT TO THE PIPE EQUAL TO THE DEPTH OF THE FITTINGS SOCKET. CEMENT MUST BE APPLIED IN SUFFICIENT QUANTITIES TO FILL THE JOINT.

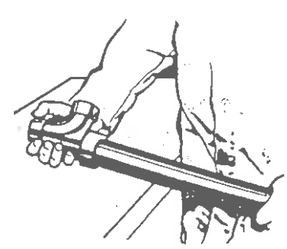

3. WITHOUT DELAY, ASSEMBLE WHILE CEMENT IS STILL WET. USE SUFFICIENT FORCE TO INSURE THAT PIPE BOTTOMS IN SOCKET. IF POSSIBLE, TWIST THE PIPE OR FITTING 1/8 TO 1/4 TURN AS ASSEMBLED. HOLD TOGETHER ABOUT 30 SECONDS TO MAKE SURE JOINT DOES NOT SEPARATE. WITH A RAG, WIPE OFF EXCESS CEMENT. AVOID DISTURBING THR JOINT.

PATRIOT HOMES	DESCRIPTION: SITE INSTALLED DRAIN & WATER LINES	REV. DATE: ADDED (AND CEMENT) TO NOTE #1 10/12/94 REV. DATE: REV. DATE: REV. DATE:	APPROVED BY: CALL SIZE:	DRAWN BY: B.F. REV DATE: DATE: 4/27/1993 10/12/1994 LINE: HOME44

WATER CROSS-OVER IN PRODUCTION

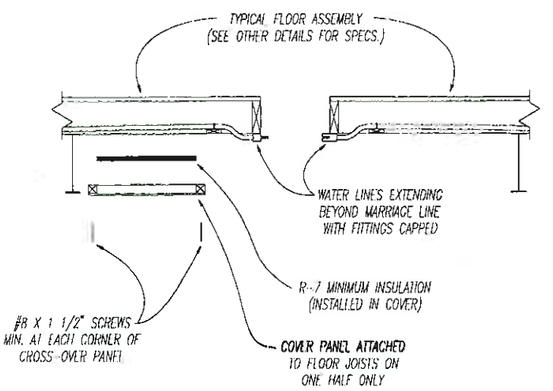

NOTES:

THE CROSS-OVER COVER IS ASSEMBLED WITH 1 X 2 MINIMUM LUMBER (ANY GRADE) FRAMING AROUND PERIMETER, AND IS COVERED WITH BOTTOM BOARD MATERIAL, OR PAINTED (OR WEATHER RESISTANT) PANELING AT BOTTOM OF COVER.

R-7 MINIMUM INSULATION BLANKET IS INSTALLED WITH NO VOIDS PERMITTED AT CROSS-OVER COVER.

TEMPERARY PLACEMENT OF CROSS-OVER COVER IS ACCEPTABLE ON EITHER HALF OF THE HOME.

MALE AND FEMALE WATER LINE FITTINGS ARE INTERCHANGABLE BETWEEN HALVES, AS LONG AS THE APPROPRIATE CONNECTIONS CAN BE MADE FOR SET-UP. (HOT & COLD ARE IDENTIFIED WHEN REQUIRED).

THE WATER CROSS-OVER COVER WILL BE IDENTIFIED WITH "WC" MARKED ON THE COVER WITH PAINT, LABEL, OR OTHER PERMANENT MEANS OF IDENTIFICATION.

WHERE WATER LINES AT CROSS-OVER PASS THROUGH THE BOTTOM BOARD OF EACH HALF, THE PENNITRATION WILL BE MADE RODENT PROOF IN ACCORDANCE WITH THE FEDERAL STANDARDS.

WATER CROSS-OVER AFTER SET-UP

SET-UP NOTES:

TO PROTECT WATER LINES FROM FREEZING TEMPERATURES, BE SURE INSULATION IS INSTALLED INTO COVER BEFORE INSTALLATION.

THE WATER CROSSOVER COVER CAN BE IDENTIFIED BY THE MARKING "WC" ON THE EXPOSED FACE OF THE COVER.

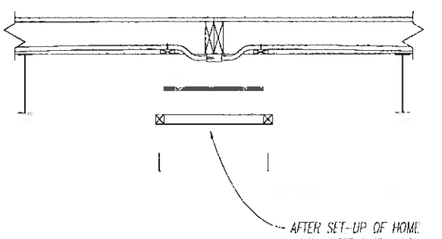

AFTER SET-UP OF HOME AND WATER LINES ARE CONNECTED BETWEEN UNITS, COVER IS REMOVED FROM SHIPPING LOCATION AND SECURED INTO PLACE OVER CROSSOVER LOCATION WITH #8 X 1 1/2" SCREWS IN EACH CORNER TO JOISTS

PATRIOT HOMES	DESCRIPTION: ALT. WATER CROSS-OVER	REV. DATE: / REV. DATE: / REV. DATE: / REV. DATE:	APPROVED BY: / CALL SIZE:	DRAWN BY: CWP REV. DATE: DATE: 1/17/1995 / LINE: WXOVER

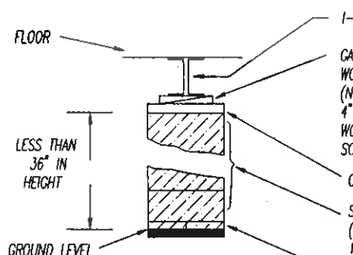

I-BEAM FRAME

GAP BETWEEN TOP OF PIER AND MAIN FRAME MAY BE A WOOD PLATE (NOT EXCEEDING 2" IN THICKNESS) AND SHIMS (NOT EXCEEDING 2" IN THICKNESS). SHIMS SHALL BE AT LEAST 4" WIDE AND 6" LONG, FITTED AND DRIVEN TIGHT BETWEEN WOOD PLATE OR PIER AND MAIN FRAME. TWO INCH OR 4" SOLID CONCRETE BLOCK MAY FILL REMAINDER OF GAP.

CAP-WOOD OR CONCRETE, 2"X8"X16"

SINGLE OPEN OR CLOSED CELL CONCRETE BLOCKS 8"X8"X16" (OPEN CELLS PLACED VERTICALLY UPON FOOTER) INSTALLED WITH 16" DIMENSION PERPENDICULAR TO THE I-BEAM FRAME.

FOOTING-24"X24"X6" SOLID CONCRETE OR OTHER PRODUCT APPROVED FOR THE PURPOSE.

FOOTING PLACED ON FIRM UNDISTURBED SOIL OR ON CONTROLLED FILL FREE OF GRASS AND ORGANIC MATERIALS COMPACTED TO A MINIMUM LOAD BEARING CAPACITY OF 2000 PSF

PATRICK M. McGUIRE REGISTERED No. 17446 STATE OF INDIANA PROFESSIONAL ENGINEER

Patrick M. McGuire 1-24-95

- 32' WIDE HOMES BUILT FOR 20# & 30# ROOF LOAD AREA WITH FLOOR JOIST AT 16" CENTER-LINE DO NOT REQUIRE PERIMETER BLOCKING, OTHER THAN AT SIDEWALL AND MARRIAGE WALL OPENINGS AS NOTED, REGARDLESS OF DECKING TYPE.
- 40# ROOF LOAD AREAS REQUIRE PERIMETER BLOCKING SPACED 8'-0" MAXIMUM BETWEEN PIER CENTERLINES, AND AT SIDEWALL AND MARRIAGE WALL OPENINGS AS NOTED.

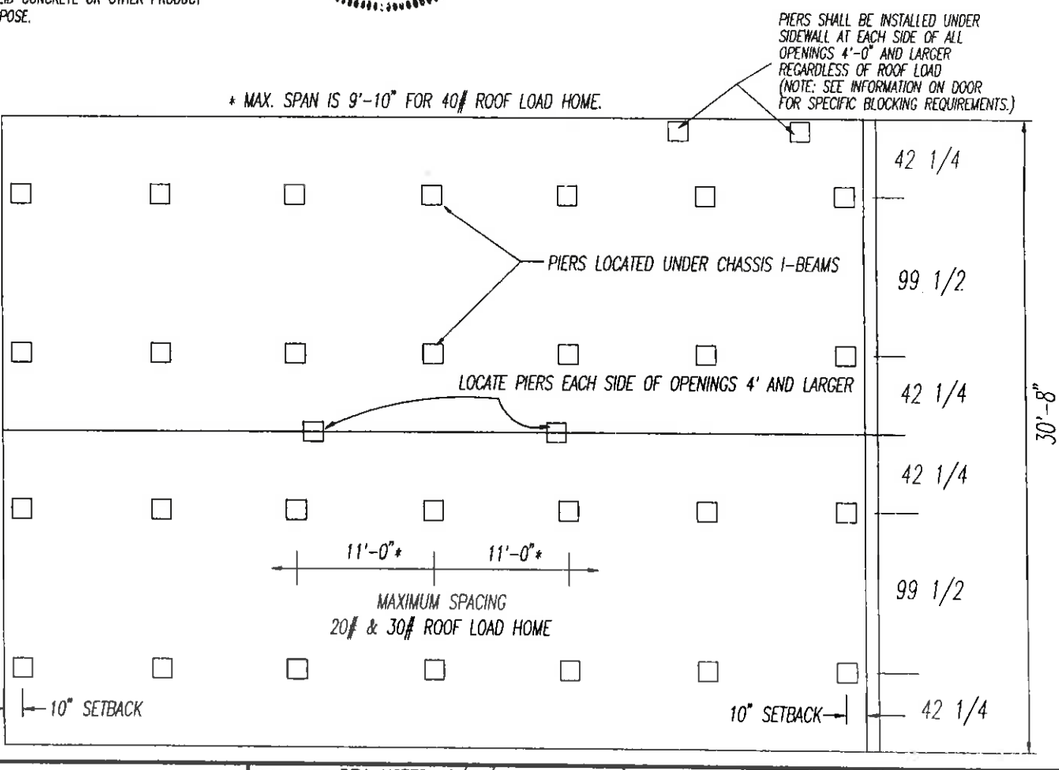

FOOTINGS: CONCRETE FOOTINGS THAT EXTEND BELOW FROST LINE ARE RECOMMENDED TO BE USED. MINIMUM SIZE FOOTINGS ARE 24"X24"X6" THICK IF FROST LINE ALLOWS. MINIMUM PIER CAPACITY 7500#.

PIERS SHALL BE REVIEWED BY LOCAL PROFESSIONAL ENGINEER OR LOCAL BUILDING AUTHORITY FAMILIAR WITH CONDITIONS AT SITE.

PATRIOT HOMES	DESCRIPTION: 32' WIDE FOUNDATIONS	REV. DATE: REV. NOTES 8/16/94 / REV. DATE: REV. MAX. SPACING 1-3-95 / REV. DATE: / REV. DATE:	APPROVED BY: / CALL SIZE:	DRAWN BY: JAL DATE: 4/27/1993 / LINE: FOUN32IN

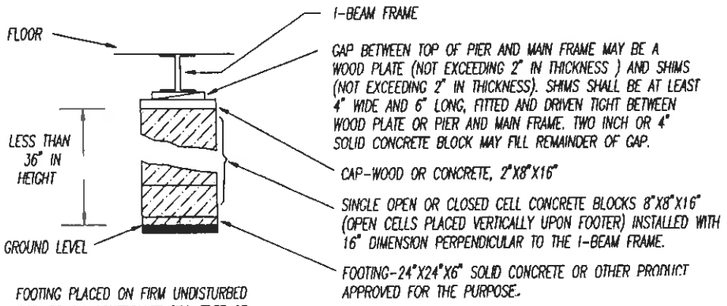

FOOTING PLACED ON FIRM UNDISTURBED SOIL OR ON CONTROLLED FILL FREE OF GRASS AND ORGANIC MATERIALS COMPACTED TO A MINIMUM LOAD BEARING CAPACITY OF 2000 PSF

PATRICK M. McGUIRE REGISTERED No. 17446 STATE OF INDIANA PROFESSIONAL ENGINEER

Patrick M. McGuire 1-24-95

* MAX. SPAN IS 10'-6" FOR 40# ROOF LOAD HOME.

PIERS SHALL BE INSTALLED UNDER SIDEWALL AT EACH SIDE OF ALL OPENINGS 4'-0" AND LARGER REGARDLESS OF ROOF LOAD (NOTE: SEE INFORMATION ON DOOR FOR SPECIFIC BLOCKING REQUIREMENTS.)

- ALL 28' HOMES WITH HALF INCH FINISH DRYWALL REQUIRES PERIMETER AND MARRIAGE WALL BLOCKING AT 12'-0" MAXIMUM. THESE FOOTINGS ARE NOT REQUIRED TO BE BELOW FROST LINE, HOWEVER DAMAGE TO DRYWALL MAY OCCUR AND PERIODIC ADJUSTMENTS WILL BE REQUIRED.

-40# ROOF LOAD AREAS REQUIRE PERIMETER BLOCKING SPACED 8'-0" MAXIMUM BETWEEN PIER CENTERLINES, AND AT SIDEWALL AND MARRIAGE WALL OPENINGS AS NOTED.

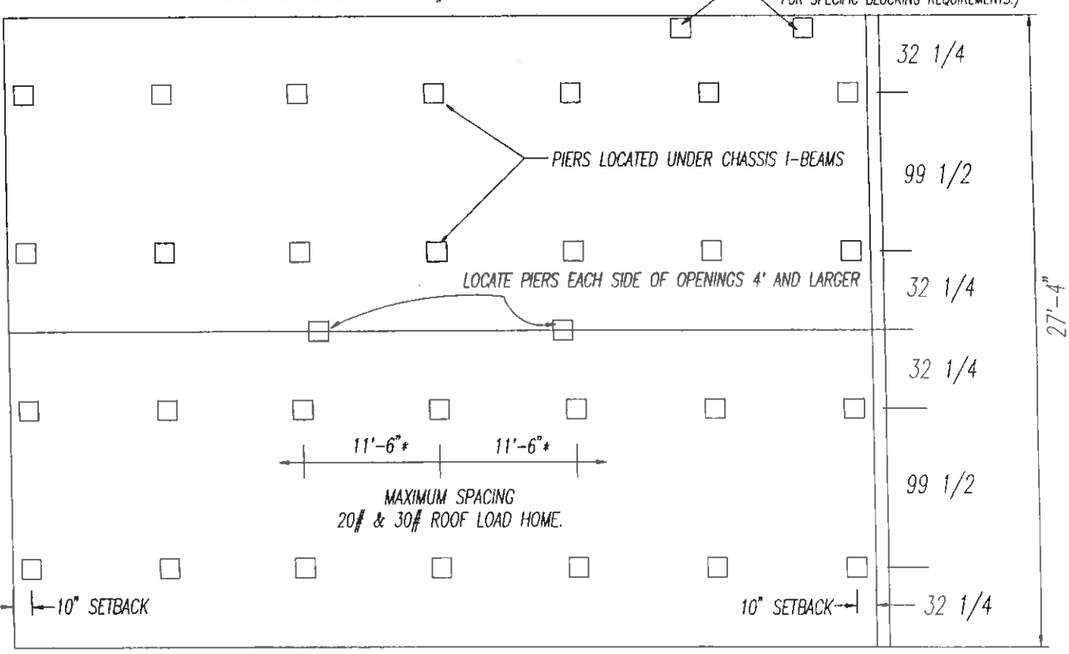

FOOTINGS: CONCRETE FOOTINGS THAT EXTEND BELOW FROST LINE ARE RECOMMENDED TO BE USED. MINIMUM SIZE FOOTINGS ARE 24"X24"X6" THICK IF FROST LINE ALLOWS. MINIMUM PIER CAPACITY 7500#.

PIERS SHALL BE REVIEWED BY LOCAL PROFESSIONAL ENGINEER OR LOCAL BUILDING AUTHORITY FAMILIAR WITH CONDITIONS AT SITE.

ENERGYMATE	DESCRIPTION: 28' WIDE FOUNDATIONS WITH FINISHED DRYWALL	REV. DATE: REV. MAX. SPACING 1-3-95 REV. DATE: REV. DATE: REV. DATE:	APPROVED BY: CALL SIZE:	DRAWN BY: JAL DATE: 4/27/1993 LINE: FOUN28IN

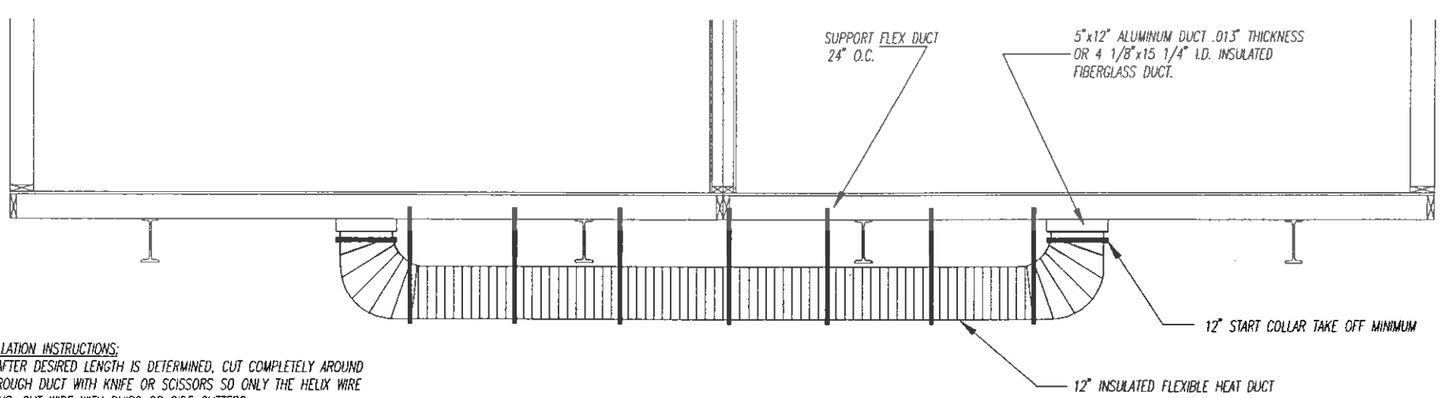

INSTALLATION INSTRUCTIONS:
1.) AFTER DESIRED LENGTH IS DETERMINED, CUT COMPLETELY AROUND & THROUGH DUCT WITH KNIFE OR SCISSORS SO ONLY THE HELIX WIRE REMAINS. CUT WIRE WITH SNIPS OR SIDE CUTTERS.
2.) PEEL BACK JACKET & INSULATION FROM CORE. SLIDE AT LEAST 3" OF CORE OVER COLLAR PIPE OR FITTING & TAPE WITH AT LEAST 2 WRAPS OF DUCT TAPE.
3.) PULL JACKET & INSULATION BACK OVER CORE. TAPE JACKET WITH 2 WRAPS OF DUCT TAPE. SECURE WITH 1/2" MIN. METAL BAND CLAMP

SPLICING TWO LENGTHS
INSERT PROPER DIAMETER STEEL (28 GA. MIN.) COUPLING INTO END OF EACH DUCT AT LEAST 2" LEAVING A MINIMUM OF 2" SPACE BETWEEN DUCT SECTIONS. PERFORM THE ABOVE PROCEDURE ON END OF END DUCT STARTING THE TAPE FROM THE COUPLING END. REPEAT PROCEDURE ON END OF SECOND DUCT.

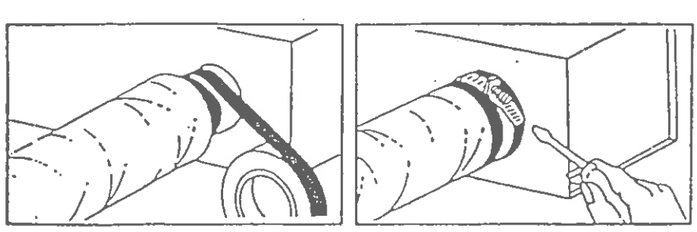

PATRIOT HOMES	DESCRIPTION: CROSSOVER DUCT INSTALLATION	REV. DATE: REV. DATE: REV. DATE: REV. DATE:	APPROVED BY: CALL SIZE:	DRAWN BY: B.F. REV DATE: DATE: 4/27/1993 LINE: HOME45

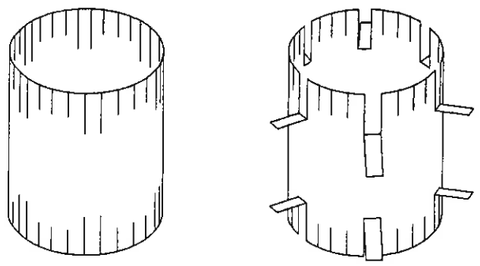

15" DIAMETER GALV DUCT CONNECTOR.
EVERY FIFTH DEEP SLOT FORMS THE OUTER FLANGE, ALL OTHERS FORM THE INNER FLANGE WITH THE DUCT WALLS SANDWICHED BETWEEN.

CONNECTOR SLIT FOR 1" ON ONE END AND 13/16" ON OTHER TO PROPERLY FIT DUCT WALLS. CONNECTOR INSTALLED AT PLANT AND LOCATED TO CORRESPOND WITH DUCT CAPACITY CALCULATIONS.

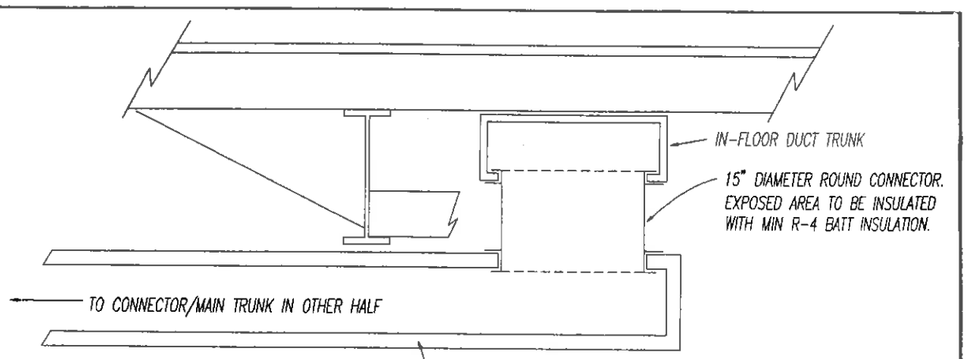

8" X 22" FIBERGLASS DUCT (R-4.3, 1" WALL)
FABRICATED ON-SITE BY BUILDER/DEALER

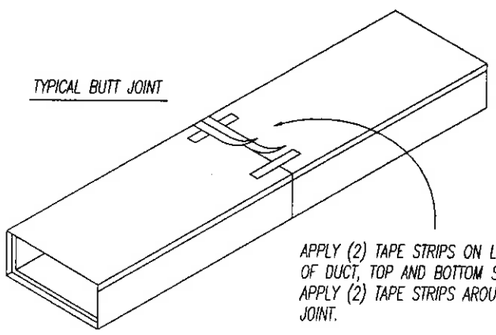

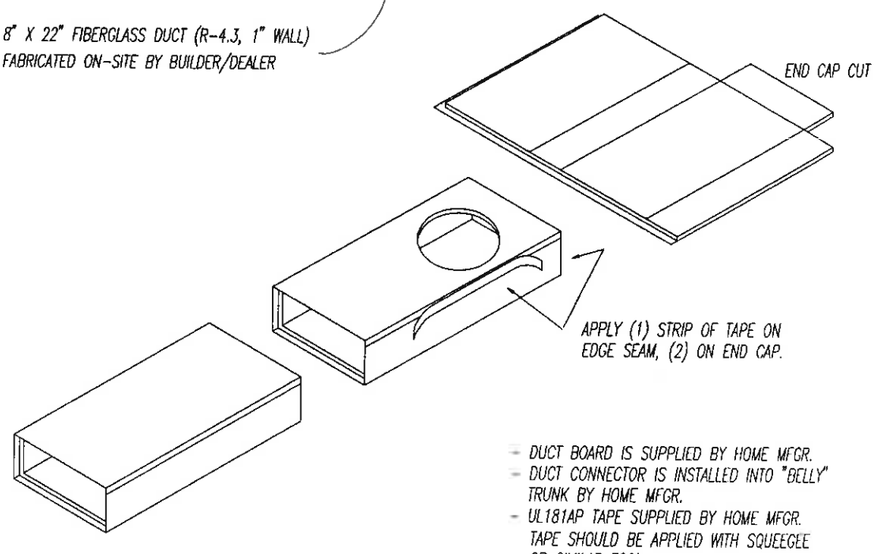

- DUCT BOARD IS SUPPLIED BY HOME MFGR.
- DUCT CONNECTOR IS INSTALLED INTO "BELLY" TRUNK BY HOME MFGR.
- UL181AP TAPE SUPPLIED BY HOME MFGR. TAPE SHOULD BE APPLIED WITH SQUEEGEE OR SIMILAR TOOL.
- DUCT TO BE SUPPORTED 48" MAXIMUM AND AT EACH END.

THIS DUCT TO BE INSTALLED ONLY WITH CRAWLSPACE OR BASEMENT FOUNDATIONS.

PATRIOT HOMES	DESCRIPTION: OPTIONAL RECTANGULAR FIBERGLASS CROSSOVER DUCT	REV. DATE: / REV. DATE: / REV. DATE: / REV. DATE:	APPROVED BY: / CALL SIZE:	DRAWN BY: DS REV DATE: / DATE: 12-11-95 / LINE: CROSSOVR

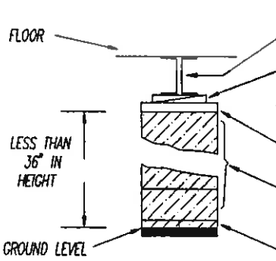

CAP BETWEEN TOP OF PIER AND MAIN FRAME MAY BE A WOOD PLATE (NOT EXCEEDING 2" IN THICKNESS) AND SHIMS (NOT EXCEEDING 2" IN THICKNESS). SHIMS SHALL BE AT LEAST 4" WIDE AND 6" LONG, FITTED AND DRIVEN TIGHT BETWEEN WOOD PLATE OR PIER AND MAIN FRAME. TWO INCH OR 4" SOLID CONCRETE BLOCK MAY FILL REMAINDER OF GAP.

FOOTING PLACED ON FIRM UNDISTURBED SOIL OR ON CONTROLLED FILL FREE OF GRASS AND ORGANIC MATERIALS COMPACTED TO A MINIMUM LOAD BEARING CAPACITY OF 2000 PSF

PATRICK M. McGUIRE REGISTERED No. 17446 STATE OF INDIANA PROFESSIONAL ENGINEER

Patrick M. McGuire 1-24-95

- 28' WIDE HOMES BUILT FOR 20# & 30# ROOF LOAD AREAS WITH FLOOR JOIST AT 16" CENTER-LINES DO NOT REQUIRE PERIMETER BLOCKING OTHER THAN AT SIDEWALL AND MARRIAGE WALL OPENINGS AS NOTED.
- HOMES BUILT FOR 40# ROOF LOAD AREAS WITH FLOOR JOIST AT 16" CENTERLINES REQUIRE BLOCKING UNDER SIDEWALL AND MARRIAGE WALL SPACED 8'-0" MAXIMUM BETWEEN PIER CENTER-LINES, AND AT SIDEWALL AND MARRIAGE WALL OPENINGS AS NOTED.

FOOTINGS: CONCRETE FOOTINGS THAT EXTEND BELOW FROST LINE ARE RECOMMENDED TO BE USED. MINIMUM SIZE FOOTINGS ARE 24"X24"X6" THICK IF FROST LINE ALLOWS. MINIMUM PIER CAPACITY 7500#.

PIERS SHALL BE REVIEWED BY LOCAL PROFESSIONAL ENGINEER OR LOCAL BUILDING AUTHORITY FAMILIAR WITH CONDITIONS AT SITE.

* MAX. SPAN IS 10'-6" FOR 40# ROOF LOAD HOME.

PIERS SHALL BE INSTALLED UNDER SIDEWALL AT EACH SIDE OF ALL OPENINGS 4'-0" AND LARGER REGARDLESS OF ROOF LOAD (NOTE: SEE INFORMATION ON DOOR FOR SPECIFIC BLOCKING REQUIREMENTS.)

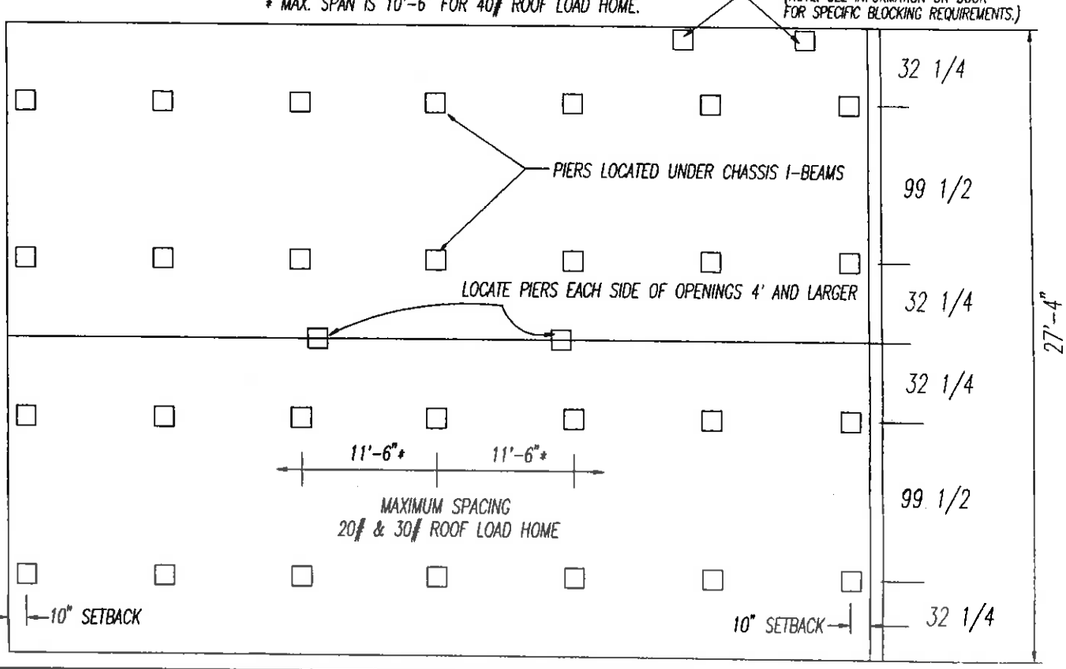

PATRIOT HOMES	DESCRIPTION: 28' WIDE FOUNDATIONS	REV. DATE: REV. NOTES. 8/16/94 / REV. DATE: REV. MAX. SPACING 1-3-95 / REV. DATE: / REV. DATE:	APPROVED BY: / CALL SIZE:	DRAWN BY: JAL / DATE: 4/27/1993 / LINE: FOUN28TX

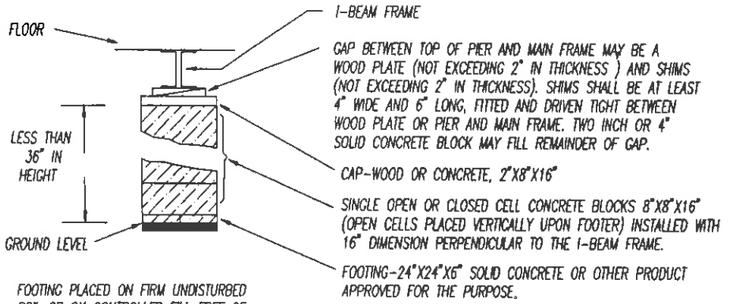

FOOTING PLACED ON FIRM UNDISTURBED SOIL OR ON CONTROLLED FILL FREE OF GRASS AND ORGANIC MATERIALS COMPACTED TO A MINIMUM LOAD BEARING CAPACITY OF 2000 PSF

PATRICK M. McGUIRE REGISTERED No. 17446 STATE OF INDIANA PROFESSIONAL ENGINEER

Patrick M. McGuire 1-24-95

* MAX. SPAN IS 11'-0" FOR 40# ROOF LOAD HOME.

PIERS SHALL BE INSTALLED UNDER SIDEWALL AT EACH SIDE OF ALL OPENINGS 4'-0" AND LARGER REGARDLESS OF ROOF LOAD (NOTE: SEE INFORMATION ON DOOR FOR SPECIFIC BLOCKING REQUIREMENTS.)

- 26' WIDE HOMES BUILT FOR 20#, 30# AND 40# ROOF LOAD AREA WITH FLOOR JOIST AT 16" CENTERLINE DO NOT REQUIRE PERIMETER BLOCKING, OTHER THAN AT SIDEWALL AND MARRIAGE WALL OPENINGS AS NOTED, REGARDLESS OF DECKING TYPE.
- IF HALF INCH FINISH DRYWALL HAS BEEN INSTALLED, PERIMETER BLOCKING IS REQUIRED AT 12'-0" MAXIMUM BETWEEN PIER CENTERLINES IN DRYWALL AREAS FOR ALL ROOF LOAD AREAS.

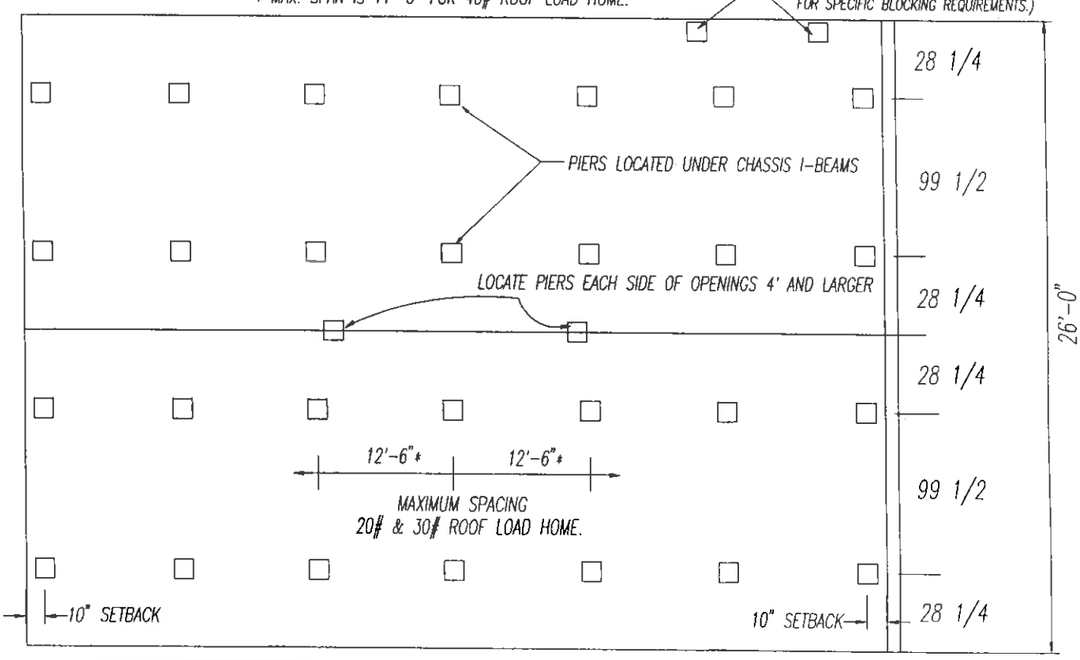

FOOTINGS: CONCRETE FOOTINGS THAT EXTEND BELOW FROST LINE ARE RECOMMENDED TO BE USED. MINIMUM SIZE FOOTINGS ARE 24"X24"X6" THICK IF FROST LINE ALLOWS. MINIMUM PIER CAPACITY 7500#.

PIERS SHALL BE REVIEWED BY LOCAL PROFESSIONAL ENGINEER OR LOCAL BUILDING AUTHORITY FAMILIAR WITH CONDITIONS AT SITE.

PATRIOT HOMES	DESCRIPTION: 26' WIDE FOUNDATIONS	REV. DATE: REV. NOTE. 8/16/94 REV. DATE: REV. MAX. SPACING 1-3-95 REV. DATE: REV. DATE:	APPROVED BY: CALL SIZE:	DRAWN BY: JAL DATE: 4/27/1993 LINE: FOUN26IN

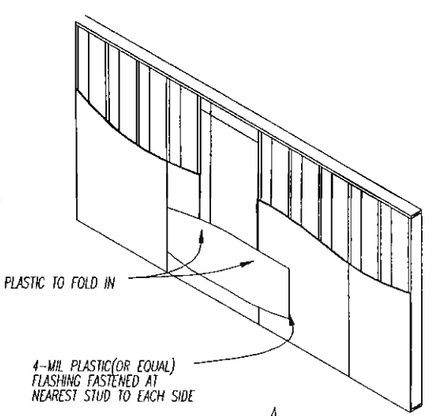

A

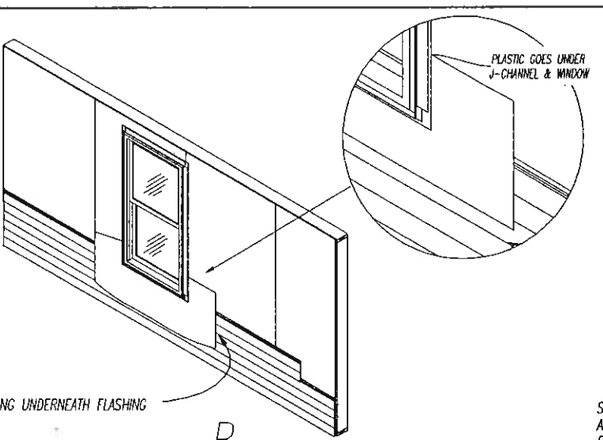

B

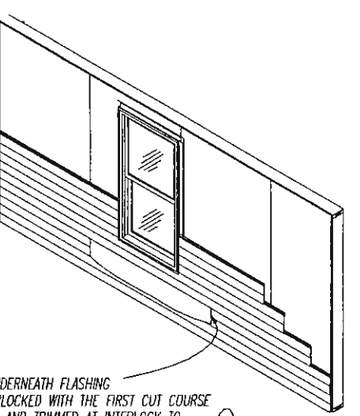

C

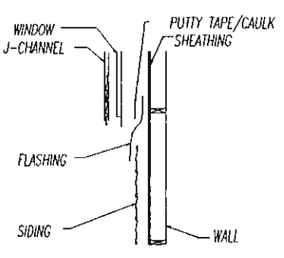

D

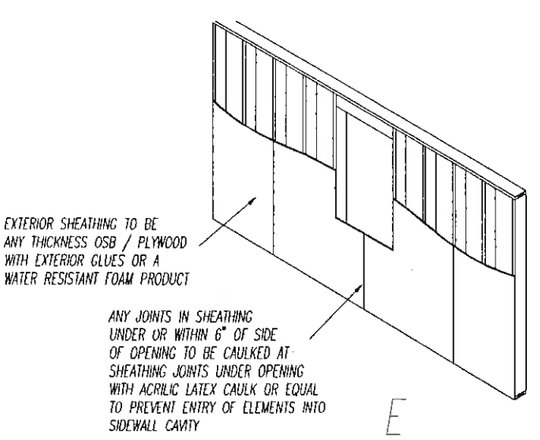

E

NOTE:

1. DETAILS A THRU D ARE REQUIRED ONLY WHEN EXTERIOR SHEATHING IS NOT MOISTURE RESISTIVE SUCH AS A PAPER OR WOOD PRODUCT THAT IS NOT MFG'D WITH EXTERIOR GLUES. REFER TO DETAIL E FOR ACCEPTABLE SHEATHINGS WHEN FLASHING AS ILLUSTRATED IN A THRU D IS NOT REQUIRED.
2. WINDOW DRAWN FOR CLARITY. DOORS OR ANY OTHER OPENINGS IN VINYL EXTERIOR TO BE FLASHED AS ILLUSTRATED OR CAULKED TO PREVENT ENTRY OF ELEMENTS.
3. FLASHING TO EXTEND MINIMUM 2" ABOVE BOTTOM EDGE OF J-CHANNEL WHEN REQUIRED.
4. J-CHANNEL MAY BE "INTEGRAL" WITH FRAMEWORK OF WINDOW OR DOOR. EXPOSED LEG OF INTEGRAL J-CHANNEL TO BE 1/2" MINIMUM.

THIS DETAIL APPLIES TO ALL VINYL SIDING APPLICATIONS.

PATRIOT HOMES	DESCRIPTION: VINYL SIDING PROTRUSION RESISTANCE TO ELEMENTS	REV. DATE: REV. DATE: REV. DATE: REV. DATE:	APPROVED BY: CALL SIZE:	DRAWN BY: B.F. REV. DATE: DATE: 4/26/1993 LINE: HOME55

SKIRTING/CRAWL SPACE VENTILATION REQUIREMENTS

The space between the bottom of the floor joists and the earth under any building (except such space as is occupied by a basement or cellar) shall be provided with a sufficient number of ventilating openings through foundation walls or skirting to ensure ample ventilation, and such openings shall be covered with a corrosion-resistant wire mesh not greater than 1/2 inch nor less than 1/4 inch in any dimension. The minimum net area of ventilation openings shall be not less than 1 square foot for each 150 square feet of crawl space area. One such ventilating opening shall be within 3 feet of each corner of said building.
A 6-mil polyethylene vapor barrier over the ground surface under the home should be installed when hardboard siding is on the home.

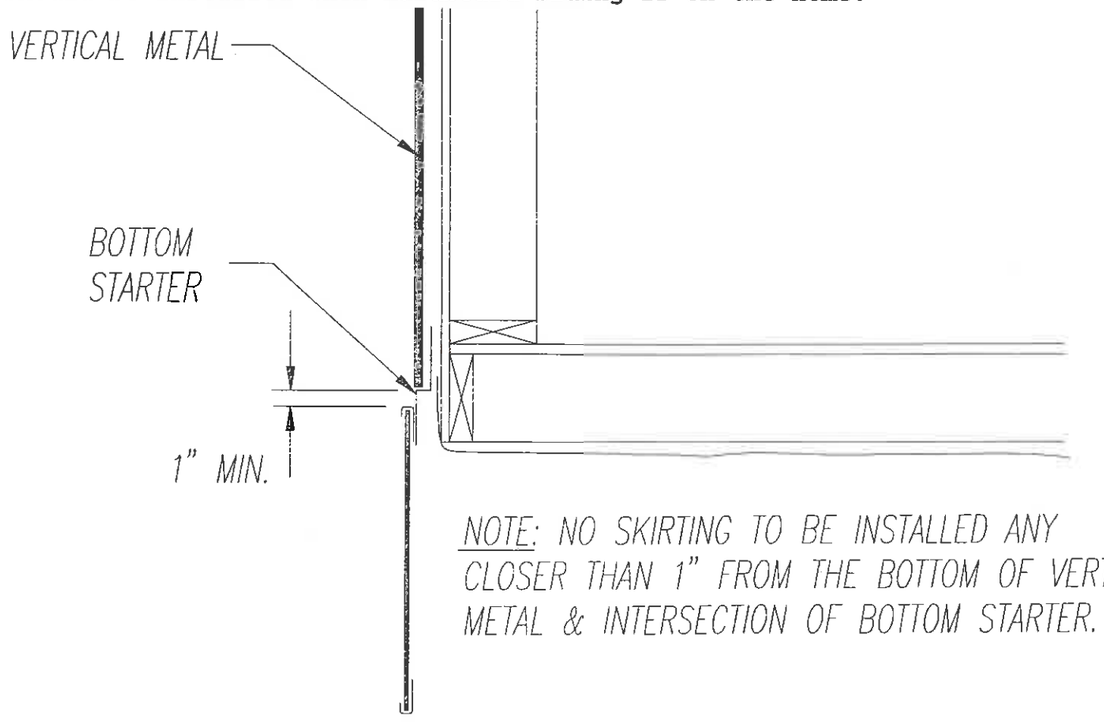

NOTE: NO SKIRTING TO BE INSTALLED ANY CLOSER THAN 1" FROM THE BOTTOM OF VERTICAL METAL & INTERSECTION OF BOTTOM STARTER.

STRUCTURAL AND SYSTEMS DESIGN

The manufactured home structural, electrical, plumbing, heating and cooling systems have been designed, reviewed and found to be in conformance with the Federal Construction and Safety Standard for Manufactured Homes by NTA, Inc., Nappanee, IN.

PIERS AND FOOTING TO BE REVIEWED BY LOCAL PROFESSIONAL ENGINEER OR LOCAL BUILDING AUTHORITY FAMILIAR WITH CONDITIONS ON SITE.

Patrick M. McGuire 1-24-95

PATRICK M. McGUIRE REGISTERED No. 17446 STATE OF INDIANA PROFESSIONAL ENGINEER

NOTE: - 14' WIDE HOMES BUILT FOR 20# AND 30# ROOF LOAD AREAS WITH FLOOR JOIST AT 16" CENTERLINE DO NOT REQUIRE PERIMETER BLOCKING, OTHER THAN AT SIDEWALL OPENINGS AS NOTED, REGARDLESS OF DECKING TYPE.

- HOMES BUILT FOR 40# ROOF LOAD AREAS WITH FLOOR JOIST AT 16" CENTERLINE AND STURDIFLOOR DECKING REQUIRE PERIMETER BLOCKING SPACED 8'-0" MAXIMUM BETWEEN PIER CENTERLINES, AND AT SIDEWALL OPENINGS AS NOTED. 40# ROOF LOAD AREAS WITH PARTICLEBOARD DECKING DO NOT REQUIRE PERIMETER BLOCKING OTHER THAN SIDEWALL OPENINGS AS NOTED.

PIERS SHALL BE INSTALLED UNDER SIDEWALL AT EACH SIDE OF ALL OPENINGS 4'-0" AND LARGER REGARDLESS OF ROOF LOAD (NOTE: SEE INFORMATION ON DOOR FOR SPECIFIC BLOCKING REQUIREMENTS.)

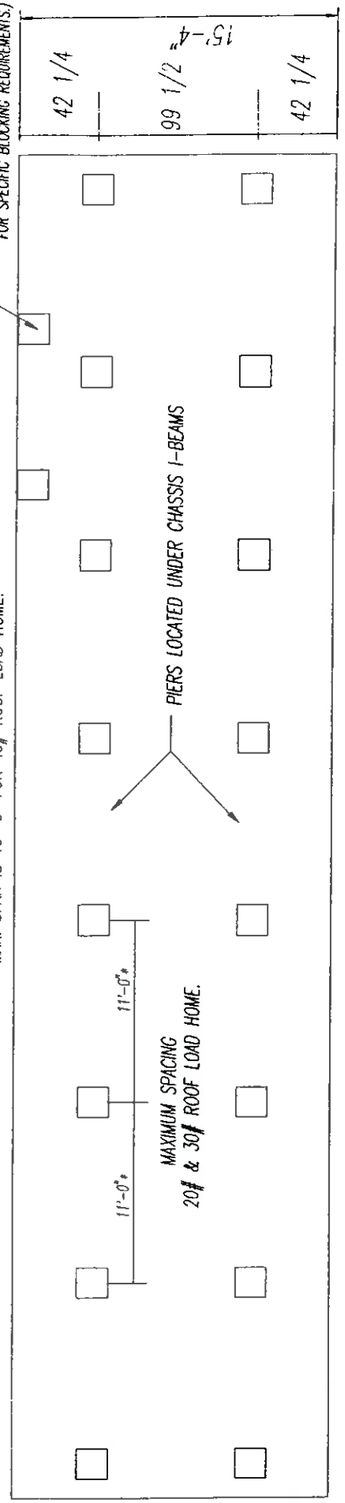

FOOTINGS: CONCRETE FOOTINGS THAT EXTEND BELOW FROST LINE ARE RECOMMENDED TO BE USED. MINIMUM SIZE FOOTINGS ARE 24" X 24" X 6" THICK IF FROST LINE ALLOWS.
MINIMUM PIER CAPACITY 7500#

* MAX. SPAN IS 10'-0" FOR 40# ROOF LOAD HOME.

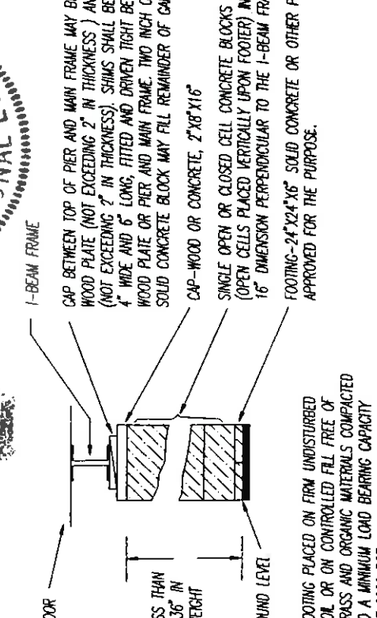

REV. DATE: REV. NOTES 8/16/94
REV. DATE: REV. MAX. SPACING 1-3-95
REV. DATE:
REV. DATE:

APPROVED BY:
CALL SIZE:

DRAWN BY: JAL
DATE: 4/27/1993
LINE: FOUN16IN

DESCRIPTION
16' WIDE FOUNDATIONS

PATRIOT HOMES

PIERS AND FOOTINGS TO BE REVIEWED BY LOCAL PROFESSIONAL ENGINEER OR LOCAL BUILDING AUTHORITY FAMILIAR WITH CONDITIONS AT SITE.

NOTE: - 14' WIDE HOMES BUILT FOR 20# AND 30# ROOF LOAD AREAS WITH FLOOR JOIST AT 16" CENTERLINE DO NOT REQUIRE PERIMETER BLOCKING, OTHER THAN AT SIDE-WALL OPENINGS AS NOTED, REGARDLESS OF DECKING TYPE.

- HOMES BUILT FOR 40# ROOF LOAD AREAS WITH FLOOR JOIST AT 16" CENTERLINE AND STURDIFLOOR DECKING REQUIRE PERIMETER BLOCKING SPACED 8'-0" MAXIMUM BETWEEN PIER CENTERLINES, AND AT SIDEWALL OPENINGS AS NOTED. 40# ROOF LOAD AREAS WITH PARTICLEBOARD DECKING DO NOT REQUIRE PERIMETER BLOCKING OTHER THAN SIDEWALL OPENINGS AS NOTED.

PATRICK M. McGUIRE REGISTERED No. 17446 STATE OF INDIANA PROFESSIONAL ENGINEER

Patrick M. McGuire 1-24-95

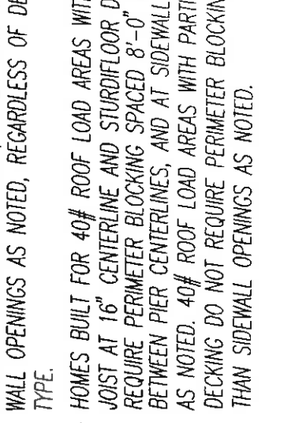

FOOTINGS: CONCRETE FOOTINGS THAT EXTEND BELOW FROST LINE ARE RECOMMENDED TO BE USED. MINIMUM SIZE FOOTINGS ARE 24" X 24" X 6" THICK IF FROST LINE ALLOWS.
MINIMUM PIER CAPACITY 7500#

* MAX. SPAN IS 11'-0" FOR 40# ROOF LOAD HOME.

PIERS SHALL BE INSTALLED UNDER SIDEWALL AT EACH SIDE OF ALL OPENINGS 4'-0" AND LARGER REGARDLESS OF ROOF LOAD (NOTE: SEE INFORMATION ON DOOR FOR SPECIFIC BLOCKING REQUIREMENTS.)

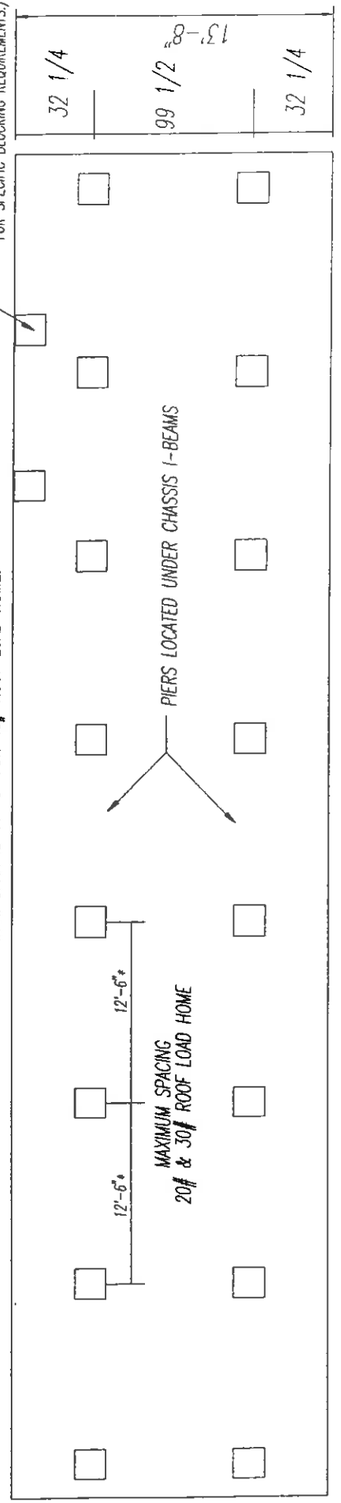

REV. DATE:	REV. NOTES 8/16/94	APPROVED BY:	DRAWN BY: JAL
REV. DATE:	REV. MAX. SPACING 1-3-95		DATE: 4/27/1993
REV. DATE:		CALL SIZE:	LINE: FOUN14IN
REV. DATE:			

DESCRIPTION 14' WIDE FOUNDATIONS

PATRIOT HOMES

COR-A-VENT®
1-800-837-8368
2529 LINCOLNWAY WEST, MISHAWAKA IN 456544

COR-A-VENT V-300 3 PLY INSTALLATION INSTRUCTIONS

DETERMINING VENTILATION REQUIREMENTS

Ventilation requirements for roof cavities are based on National Building Codes. They call for a ratio of 1:300, i.e., 1 square foot of ventilation for every 300 square feet of attic area, with 50% of the ventilating area at the eaves and 50% at the ridge. **NOTE:** Interpretation of these codes may vary. For exact information consult your local building code department. **THE RIDGE VENT MUST ALWAYS BE INSTALLED IN COMBINATION WITH SOFFIT/EAVE VENTS!** If the ridge vent were to be installed alone, then part of it could serve as an inlet because of the air pressure differences along the ridge. This could cause weather infiltration. The air passageway or "Ventilation Chute" between the inlet (soffit/eave) vents and the outlet (ridge) vent must not be blocked or restricted. Should this condition exist, then the ridge vent could function as without soffit/eave vents and could cause weather infiltration. CALCULATION RULE: Intake (soffit/eave) vents may be larger in square inches of Net Free Vent Area (N.F.V.A.), but never less than the N.F.V.A. of the exhaust provided by the ridge vent. COR-A-VENT V-300 3 PLY PROVIDES 9 SQUARE INCHES OF NET FREE VENTILATION PER LINEAL FOOT OF VENT USED.

INSTALLATION OF THE VENT

Please read all instructions before installing the ridge vent.

STEP 1. If the slot has not been factory cut, snap a chalk line 1 1/2" each side of the center line of the ridge. Cut back plywood and or shingles to this line. Stop slot 6" short of where the vent will start. If slot has been cut at the factory it may be necessary to install the last course or two of shingles. Trim last course of shingles flush with slot. **Do not cover-up slot with shingles.** Run shingle caps up to the slot on both ends. **NOTE:** See step 4 for an alternate cap method.

STEP 2. Caulk the end of the ridge vent to prevent weather and insects from entering. Use a good grade roof cement or caulking. The folded end cap detail may also be used (see back side of this brochure).

STEP 3. On roof pitches less than 3/12 a bead of caulk should be placed on the outside bottom edge of the Cor-A-Vent between the ridge vent and the shingles. Starting 6" beyond the end of the slot at one end of the roof, center the first piece of Cor-A-Vent on the ridge and attach it where it is marked "Nail" with 1 3/4" nails or staples. **Make sure vent is aligned at the same pitch as the roof.** Fasten firmly but do not over drive fastener. Fasteners must penetrate the roof sheathing. **Failure to penetrate the roof sheathing will void the warranty.** It is very important that the Cor-A-Vent be fastened down at the indicated nail points. Fasten the remaining pieces of Cor-A-Vent in the same manner, butting each piece tightly against the previous one and centering on the ridge. Let the last piece of Cor-A-Vent run 6" past the end of the slot. Repeat step 2 at this end of the ridge.

STEP 4. Cap the ridge vent by starting the first cap shingle with a 1/2" overhang over the end of the vent and centered on the ridge. The nails or fasteners must penetrate the roof sheathing. Failure to do so could cause cap shingles to blow off. **NOTE:** An alternate cap method is to start caps at one end of the roof and run them to the other end, letting the caps step over the ridge vent.

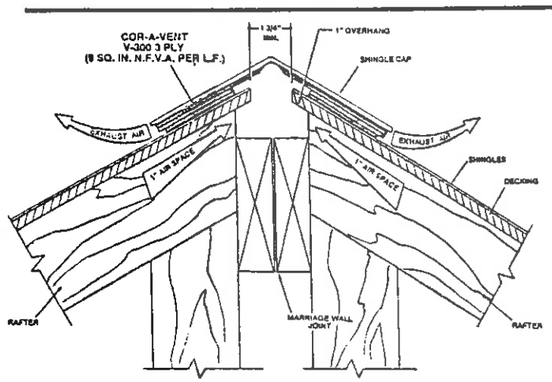

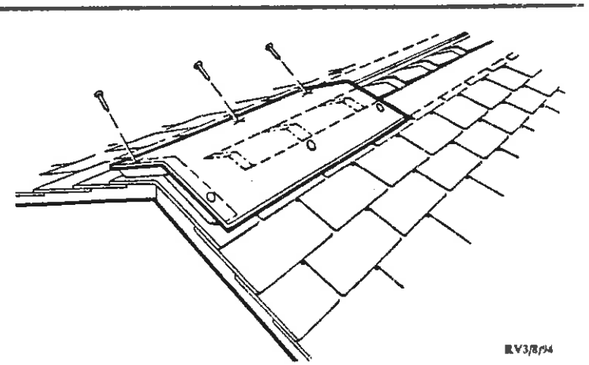

REV3/8/94

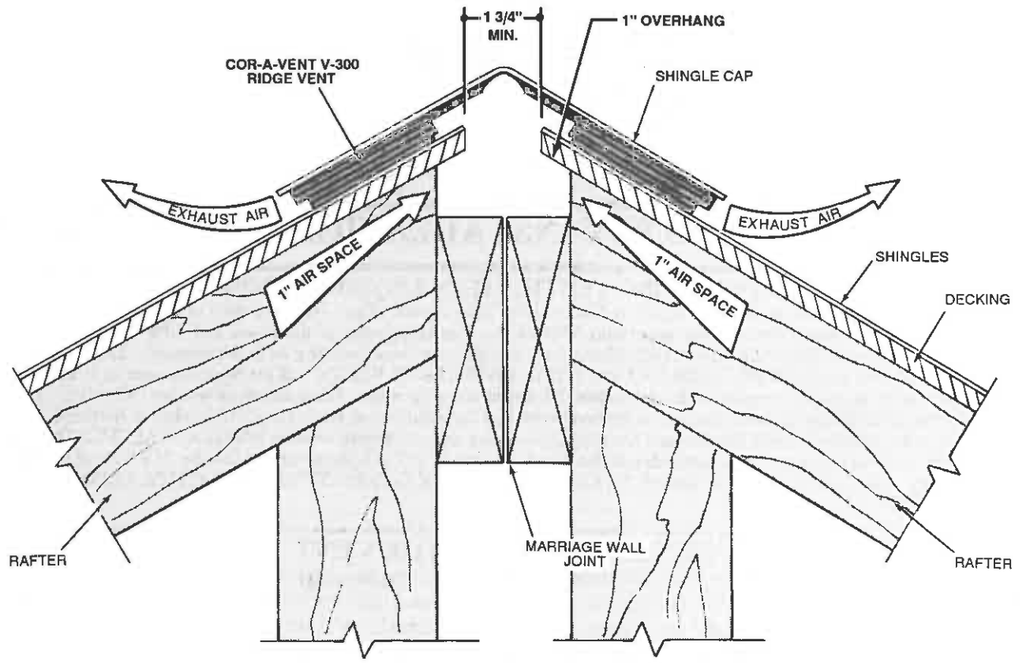

COR-A-VENT V-300 RIDGE VENT FOR MANUFACTURED HOUSING INSTALLED MODE

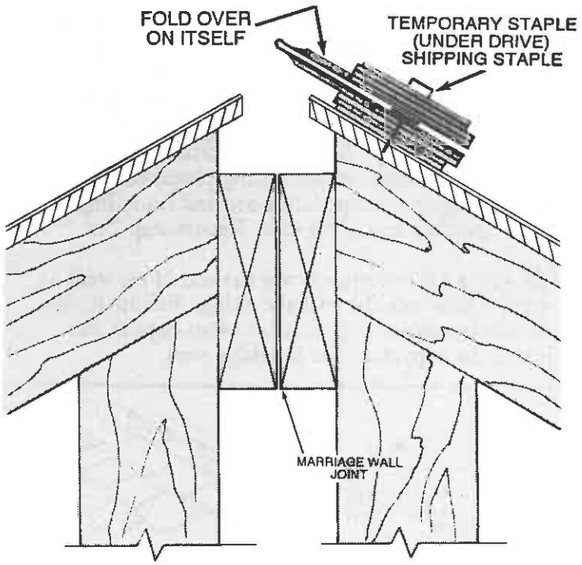

DETAIL NO. 1
ALTERNATE SHIPPING MODE

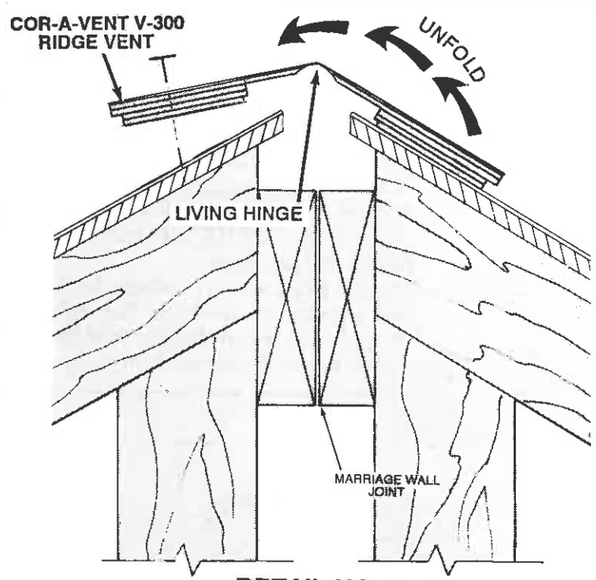

DETAIL NO. 2
FIELD INSTALLATION

THE LEADER IN
INNOVATIVE ROOFTOP VENTILATION! ™
16250 Petro Drive · Mishawaka, IN 46544
1-800-837-VENT

RP0893

© 1993 COR-A-VENT, INC.

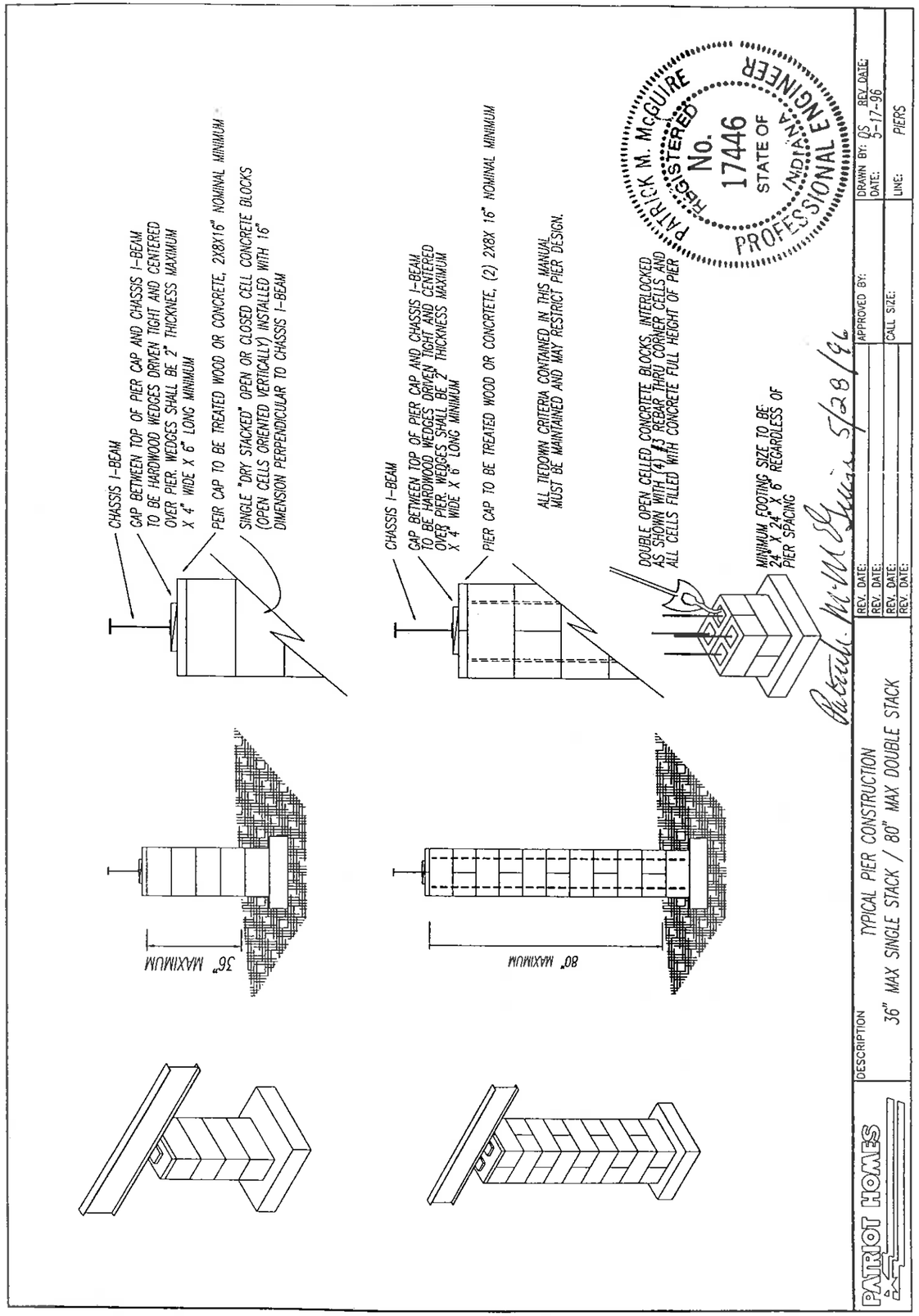

III. SETTING UP AND ANCHORING THE MANUFACTURED HOME

Please read all instructions prior to set-up

Patriot Homes have been engineered and designed with the intention of meeting or exceeding all code requirements set forth in the National Manufactured Home Construction and Safety Standard.

Set-up of your Patriot Home should only be done by properly trained personnel.

The installation of your home is critical to assure that the floor is level and that all mechanical and structural systems operate properly.

SITE PREPARATION

The manufactured home site must be properly prepared before the home is permanently placed on it. Most important is the need for correct grading and sloping to provide for storm drainage run-off. In this regard, it is of particular importance that water not be allowed to accumulate beneath the home. It is recommended that a 6 mil poly film be installed on ground under home to control the possibility of condensation forming within floor cavity.

Regional climatic differences must be taken into account. Settling or heaving may occur if footings are placed in frost-susceptible soil. It is of utmost importance that in areas where below freezing temperatures occur, the support footings be located below the frost line. Consult with local building officials to determine the location of the frost line.

FOUNDATION SUPPORTS

It is recommended that concrete footings be used. Footings should be 2'-0" x 2'-0"x6" thick minimum concrete pad located in soil with an allowable compaction of 2000 PSF and shall extend below the frost line. The basic foundation for placing blocking must be firm. Use of gravel and/or stone is not recommended. The supports are to be concrete blocks or stabilizing jacks with a capacity of 7500 lbs. each intermediately spaced so 9'-4" O.C.

If the soil type is unknown, the following resources may be consulted to determine the soil type/bearing capacity: (a) local authority having jurisdiction; (b) soil conservation district; (c) U.S. geological survey; (d) Dept. of Agriculture; (e) Highway Dept. If none of the above resources can provide information on soil type, a professional engineer may be used to determine the soil type.

The data plate shall be so noted if perimeter blocking is a requirement on your home. Refer to proceeding foundation pages for required perimeter blocking locations.

INDEX FOR INSTALLATION MANUAL

PAGE	COVERAGES
1	SITE PREP/FOUNDATION GENERAL
	FOUNDATIONS (INDIANA FACILITIES)
2	TYPICAL PIER CONSTRUCTION
3	14' WIDE FOUNDATION
4	16' WIDE FOUNDATION
5	26' WIDE FOUNDATION
	FOUNDATION (TEXAS FACILITIES)
6	28' WIDE FOUNDATION
	FOUNDATIONS (INDIANA FACILITIES)
7	28' WIDE FOUNDATION WITH FINISHED DRYWALL
8	32' WIDE FOUNDATION
9	PH FLOOR FOUNDATION
10	SPAN FLOOR CROSS SECTION
11	SPAN FLOOR FOUNDATION
12	BLOCKING AND LEVELING
13-14	EXTERIOR DOORS BLOCKING
15-33	TIE DOWN STRAP INSTALLATION
34	ERECTION OF HINGED ROOF
35	HINGED OVERHANG INSTALLATION
36-37	FOLD DOWN DORMER INSTALLATION
38	ELECTRICAL CONNECTION (MAIN)
39	INTERCONNECTION OF DOUBLEWIDE ELECTRICAL
40	INSTALLATION OF CEILING FAN ON RIDGE BEAM
41	GAS CONNECTION - WATER CONNECTION
	CLOTHES DRYER VENT - EXTERIOR LIGHT FIXTURES
42-43	INSTALLATION OF DRAIN / WATER PIPING
44-45	HEAT DUCT INTERCONNECTION
46	VINYL SIDING INSTALLATION
47	SKIRTING - VENTILATION - STRUCTURAL AND SYSTEMS DESIGN
48-49	RIDGE VENT INSTALLATION

PATRIOT HOMES, INC.
SINCE 1972

Bruce or Charlotte
1/25/99

PATRIOT HOMES, INC.
SINCE 1972

PATRIOT HOMES INC.
CORPORATE OFFICES
Two Key Square
307 S. Main Street, Suite 200
Elkhart, Indiana 46516
(219) 293-6507

PATRIOT DIVISION
57420 CR 3 South
Elkhart, Indiana 46517-9799
(219) 293-6507

ENERGYMATE DIVISION
57420 CR 3 South
Elkhart, Indiana 46517-9799
(219) 293-6507

LINCOLN PARK DIVISION
3195 SR 5 North, P.O. Box 610
Shipshewana, Indiana 46565-0610
(219) 768-4166

SOUTH RIDGE DIVISION
Route 3, Box 120, Highway 278 East
Hamilton, Alabama 35570-9316
(205) 921-3144

PATRIOT TEXAS DIVISION
1001 West Loop 340
Waco, Texas 76712-6844
(817) 772-3336

VICTORIAN DIVISION
109 14 Street, Box 707
Middlebury, Indiana 46540-0707
(219) 825-5841

STEEL & LUMBER DIVISION
29275 CR 20 West
Elkhart, Indiana 46517-8989
(219) 293-1111

REVISED: 10/96 2500 DP 16817

INSTALLATION INSTRUCTIONS

PATRIOT HOMES, INC.
SINCE 1972