MM#692113

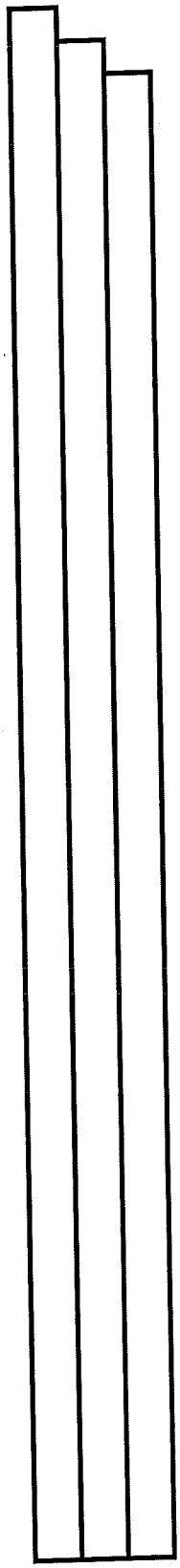

Hart housing

INSTALLATION MANUAL

6/14

Using the Manual

This manual is organized into a series of steps that will take you through the entire installation process using only those pages required for the specific home being installed. First, review the entire manual, including the Introduction chapter. As you read it, identify sections of the manual that you will need; identify other documents or information you will need; construct lists of tools and materials required for your particular installation; and make sure you have everything you need before starting work.

After reviewing the entire manual, refer to the sequence of installation steps in the table below. Identify the pathway for your installation and follow the arrows downward. Select either **Single Section Home** or a **Multi-Section Home** and choose the column corresponding to the home's foundation type, either **Pier and Ground Anchor** or **Load-Bearing Perimeter Wall** (see **Definitions**, p. 6). Then complete the work in each of the sections starting with **Getting Started**.

If using an alternative (proprietary) foundation system, the installation process will change from that described in this manual. Consult the system manufacturer's directions for instructions. See page 8 for alternative foundation system criteria.

SINGLE SECTION HOME		MULTI-SECTION HOME	
Pier and Ground Anchor	**Load-Bearing Perimeter Wall**	**Pier and Ground Anchor**	**Load-Bearing Perimeter Wall**
Getting Started (p. 10)	Getting Started (p. 10)	Getting Started (p. 10)	Getting Started (p. 10)
▼	▼	▼	▼
Prepare the Site (p. 15)	Prepare the Site (p. 15)	Prepare the Site (p. 15)	Prepare the Site (p. 15)
▼	▼	▼	▼
Install Footings (p. 20)	Construct Foundation (p. 35)	Install Footings (p. 20)	Construct Foundation (p. 35)
▼	▼	▼	▼
Set the Home (p. 38)	Connect Utilities (p. 97)	Set the Home (p. 38)	Complete Multi-Section Set (p. 44)
▼	▼	▼	▼
Install Stabilizing System (p. 75)	Prepare Appliances and Equipment (p. 105)	Complete Multi-Section Set (p. 44)	Complete Roof and Exterior Walls (p. 57)
▼	▼	▼	▼
Connect Utilities (p. 97)	Complete Under the Home and Site built Structures (p. 114)	Complete Roof and Exterior Walls (p. 57)	Connect Crossovers (p. 62)
▼	▼	▼	▼
Prepare Appliances and Equipment (p. 105)	Prepare Home for Occupancy (p. 117)	Connect Crossovers (p. 62)	Complete Interior (p. 73)
▼	▼	▼	▼
Complete Under the Home and Site built Structures (p. 114)	Complete Installation Checklist (p. 118)	Complete Interior (p. 73)	Connect Utilities (p. 97)
▼		▼	▼
Prepare Home for Occupancy (p. 117)		Install Stabilizing System (p. 75)	Prepare Appliances and Equipment (p. 105)
▼		▼	▼
Complete Installation Checklist (p. 118)		Connect Utilities (p. 97)	Complete Under the Home and Site built Structures (p. 114)
		▼	▼
		Prepare Appliances and Equipment (p. 105)	Prepare Home for Occupancy (p. 117)
		▼	▼
		Complete Under the Home and Site built Structures (p. 114)	Complete Installation Checklist (p. 118)
		▼	
		Prepare Home for Occupancy (p. 117)	
		▼	
		Complete Installation Checklist (p. 118)	

APPROVED BY
NTA INC.
Revised
Jun 09,2014
FEDERAL MANUFACTURED HOME CONSTRUCTION AND SAFETY STANDARDS

LIST OF FIGURES

Figure No.	Description	Page No.
Figure 1	Supporting a home for display	9
Figure 2	Sample Data Plate	10
Figure 2A	Wind Zone Map	11
Figure 3	Thermal (Uo) Map	12
Figure 3A	Humid and Fringe Climate Map	12
Figure 3B	Roof Load Map	13
Figure 4	Crown the soil under the home	16
Figure 5	Direct runoff away from the home	16
Figure 5A	Frost Protection Map	19
Figure 6	Typical point load support locations	20
Figure 7	Typical point load support locations	21
Figure 8	Typical support locations not requiring perimeter supports	23
Figure 8A	Typical marriage line support locations not requiring perimeter supports	24
Figure 9	Typical support locations requiring perimeter supports	26
Figure 10	Typical marriage line support locations for required perimeter supports	26
Figure 11	Maximum footing extensions	33
Figure 12	Perimeter Supports	34
Figure 13	Cross Beam Installation	36
Figure 14	Connection using 2x10 Sill Plate	36
Figure 15	Safety Cribbing	39
Figure 16	Frame Pier Construction	42
Figure 17	Correct Shim Placement	42
Figures 18	Floor Connection	45-53
Figures 19	Wall Connections	45-53
Figures 20	Roof Connections	45-53
Figure 21	Tag Unit Offset Floor Connection	54
Figure 22	Tag Unit Wall Connection	54
Figure 23	Tag Unit Flush Roof Connection	55
Figure 24	Tag Unit Offset Roof Connection	55
Figure 25	Shingle Installation at Ridge	56
Figure 26	Shingle Fasteners for WZ I and II	56
Figure 27	Shingle Cut Into Thirds	57
Figure 28	Ridge Vent	57

Figure No.	Description	Page No.
Figure 29	Triple Section Roof Connection Method 1	58
Figure 30	Triple Section Roof Connection Method 2	58
Figure 31	Tag Unit Flush Roof Connection	59
Figure 32	Tag Unit Roofing Connection w/less than two inch height difference	59
Figure 33	Tag Unit Offset Roof Connection	60
Figure 34	Furnace Over Trunk Duct, Two Home Sections	61
Figure 34A	Furnace Offset from Trunk duct, Two Home Sections	62
Figure 34B	Furnace Over Trunk Duct, Three Home Sections	62
Figure 34C	Furnace Offset from Trunk Duct, Three Home Section	62
Figure 35	Duct Crossover Located in the Roof Cavity	63
Figure 36	In-floor Duct Connection through Rim Joist w/o Metal Sleeve	63
Figure 37	In-floor Duct with Crossover Using Metal Sleeve	64
Figure 38	Types of Junction Box Wiring Connections	65
Figure 39	Electrical Crossover Floor Wires w/Flush Access Panels	65
Figure 40	Floor Electrical Crossover Wires w/Bumped-out Access Panels	65
Figure 41	Under the Rim Joist Electrical Crossover Connection with Conduit	66
Figure 42	Inside Marriage Wall Crossover Connetion	66
Figure 43	Inside Partition or Endwall Electrical Crossover Connection	66
Figure 44	Electrical Bonding of Multi-Section Homes	67
Figure 45	Water Line Crossover w/Access Panel	67
Figure 46	Water Line Crossover thru Bottom Board	68
Figure 47	Drain Crossover Connection	69
Figure 48	DWV System	69
Figure 49	DWV Connection to Sewer/Septic	70
Figure 50	DWV Pipe Support Options	70
Figure 51	Gas Crossover Connection	71
Figure 52	Typical Anchor Locations for a Double Section Home in WZ I	75
Figure 53	Typical Anchor Locations for a Double Section Home in WZ II and III	75
Figures 54	Frame Tie Down Configuration	77
Figure 55	In-Line Anchor Configuration	90
Figure 56	Stabilizer Plate Configuration	90
Figure 57	Anchor and Stabilizer Plate Location	91
Figure 58	Radius Clip	92

LIST OF FIGURES (cont.)

Figure No.	Description	Page No.
Figure 59	Tie Down Strap Splice	92
Figure 60	Strap to Beam Connection	92
Figure 61	Procedure for Connecting the Strap to Frame and Anchor	93
Figure 62	Longitudinal Frame Anchor Attachment Method	93
Figure 63	Marriage Line Tie Down Connections	94
Figure 64	Electrical Feeder Connection when Meter is on a Post or Pole	95
Figure 65	Meter Base Wiring when the Meter is on the Home	97
Figure 66	Water System Connection	98
Figure 67	Water Heater Drip Pan and Drain	99
Figure 68	Gas Service Connection	101
Figure 69	Whole House Ventilation Flex Duct	104
Figure 70	Open	-
Figure 71	Ducts Connecting Exterior Heating and/or Cooling Equipment to Home	105
Figure 72	Clothes Dryer Ventilation Ductwork through Floor or Exterior Wall	105
Figure 73	Chimney and Combustion Air Intake Duct Installation	107
Figure 74	Chimney Clearance	107
Figure 75	Roof Flashing and Shingle Installation Around Chimney	108
Figure 76	Exterior Lighting Connection	109
Figure 77	Wiring for Ceiling Fan or Chain-Hung Light w/maximum Weight	110
Figure 78	Ceiling Fan/Light Mounted to Flush Ridge Beam	110

LIST OF TABLES

Table No.	Description	Page No.
Table 1	Wind Zone by Locality	11
Table 2	Humid and Fringe Climate Zones	12
Table 3	Roof Loads by Locality	13
Table 4	Soil Bearing Capacity by Soil Type	18
Table 5	Point Load on Footings at Marriage Line Openings	22-23
Table 6	Load on Frame Pier Footings for Homes Not Requiring Perimeter Blocking Except at Openings	24-25
Table 7	Load on Frame Pier Footings for Homes Requiring Perimeter Blocking	27-30
Table 8	Footing Materials	30
Table 9	Pier Configuration	31
Table 10	Footing Dimensions	32
Table 10A	Footing Depth	33
Table 11	Pier Material Minimum Specifications	41
Table 12	Pier Construction	41
Table 13	Floor Connection Fastening Specifications	45-53
Table 14	Maximum Strap Spacing	45-53
Table 15	Strap Fastening Minimum Specifications	45-53
Table 16	Under Floor Duct Configurations	61
Table 17	Anchor Location Types	74
Table 18	WZ I Frame Tiedown Quantities	78-81
Table 19	WZ II Frame Tiedown Quantities	82-85
Table 20	WZ III Frame Tiedown Quantities	85-86
Table 21	WZ I Longitudinal Frame Tiedown Quantities	87
Table 22	WZ II Longitudinal Frame Tiedown Quantities	88
Table 23	WZ III Longitudinal Frame Tiedown Quantities	88
Table 24	Anchor Location Types	89
Table 25	Anchor System Materials Specifications	90
Table 26	Electrical Feeder Wire and Equipment Sizes for Copper Conductors	96

Table 27	Skirting and Ventilation Specifications	113
Table 28	Foundation Ventilation	113

Appendix List

Appendix	Description	Page No.
A	Alternate Foundation Approval Form	-
B	Cooling Equipment Sizing Guidelines	-
C	Storm Shutter Installation	-
D	Hinged Roof	-
Others	Plant Specific Addendum Pages	-

Please refer to Appendix for any plant specific details that may supplement or supercede information listed in the following installation manual.

The following is a list of revisions to this installation manual since the April 2013 printing:

Pages 61 - 63: Increased R value of crossover ducts and V-box from R-4 to R-8 to comply with the revised HUD Code 3280. Added a sidebar note preventing crossover ducts from becoming compressed when supported.
Page 95: Revised Figure 64 to remove some incorrect language stating certain conduits were factory installed.
Page 97: Revised Figure 65 to remove some incorrect language stating certain conduits were factory installed.
Page 99: Revised heat tape receptacle language to state that it will be on a GFCI protected circuit to comply with the revised HUD Code 3280.
Page 100: Added sidebar note regarding the testing and adjusting of the newly required anti scald valves and fixtures on tubs, tub/shower combinations and showers.
Pages 104 - 106: Increased R value of crossover ducts and V-box from R-4 to R-8 to comply with the revised HUD Code 3280. Added a sidebar note preventing crossover ducts from becoming compressed when supported.
Page 117: Added anti scald valve to check list for Water and Drain Systems

Introduction

This installation manual contains instructions that must be followed for the proper installation of the home. It complies with the HUD Installation Standards. Please read all instructions and any other documents (including addendum pages and supplements) that may apply to the specific home prior to commencing site work or installation.

This installation manual covers permits and site work through final inspection of the installation. It covers both single and multi-section homes installed over pier and anchor and load bearing crawl space walls. It contains instructions, including specifications and procedures, for the set and hookup of homes to be used as single-family dwellings.

The importance of correct installation cannot be over-emphasized. Correct installation is absolutely essential to homeowner satisfaction and the structural integrity of the home. All instructions must be followed to provide the customer with a safe, quality home.

No manual can cover all circumstances that may exist for certain home designs or building sites. For questions, further clarification or if you encounter conditions at the site or in the design of the home or its foundation not covered by this manual, please contact the manufacturer, a registered engineer or registered architect.

Supplemental addendum pages may be included with this manual. Supplements include requirements not covered in this manual or that supercede the manual instructions.

Once the home installation is complete, leave this manual with the home.

IMPORTANT NOTICES

- The home manufacturer is not responsible for installation or for the materials supplied by the set-up crew at the time of installation. The installer may be responsible for any deviations from the installation instructions of this manual.
- To keep the home in compliance with its warranty, the home installation must follow the procedures described in this manual or other procedures approved by the manufacturer. Deviation from the instructions in this manual may void the home's warranty. Any alterations or changes to the home shall be approved by a registered engineer or registered architect and may still be subject to warranty violations.
- When an installer does not provide support and anchorage in accordance with the approved manufacturer's installation instructions, or encounters site conditions (such as areas that are subject to flood damage or high seismic risk) or other conditions that prevent the use of the instructions provided in this manual, the installer must obtain special site-specific instructions from the manufacturer or use a design approved by a registered engineer or registered architect. Designs provided by registered professional engineers or registered architects must also be approved by the manufacturer and DAPIA. Alternative support and anchorage designs may be used which are state approved and acceptable to the local authority having jurisdiction.

SAFETY

There are potential hazards associated with the installation of a manufactured home. Home installers are licensed and, as experienced professionals, should recognize these hazards, be qualified to work with them, and be capable of providing safe work practices and equipment that minimize the risks of injury.

Only qualified persons should install a manufactured home. The installer must possess a valid installation license as a manufactured home installer. As qualified professionals in the field of home installation, installers are the experts and must be aware of the hazards and conditions faced. Warnings are published throughout this manual as reminders. These reminders may not cover all hazards, all potential hazards, or all possible consequences of improper or unsafe installation practices.

Construction crews should be trained in the skills required and be supervised by experienced personnel. Installers should regularly inspect work preformed by crews and subcontractors.

Obey OSHA regulations, particularly those related to home construction, such as Title 29 Code of Regulations Part 1926. For copies of OSHA regulations, call (202) 512-1800 or visit **www.osha.gov** on the web.

Office of Regulatory Affairs and Manufactured Housing
US Department of Housing and Urban Development
451 Seventh Street, SW, Room 9164
Washington, DC 20410-8000
Telephone: (202) 708-6423 or (800) 927-2891
FAX: (202) 708-4213

State Administrative Agencies
A list of SAAs may be found on the web at www.hud.gov/offices/hsg/sfh/mhs/mhssaa.cfm or by contacting the Office of Regulatory Affairs and Manufactured Housing or in the Homeowners Manual.

FEDERAL PREEMPTION

This home was engineered, constructed and inspected in conformance with the Federal Manufactured Home Construction and Safety Standards of the US Department of Housing and Urban Development (24 CFR Part 3280, commonly referred to as the "HUD Code") in effect on the date of construction. These Standards set forth minimum requirements for the design and construction of manufactured homes designed to be used as dwellings.

Individual states, counties and cities shall have no authority to establish standards regarding the construction or safety of a manufactured home. A metal certification label is affixed to each section of the home to certify that it has been constructed and inspected to comply with these Standards. The design plans and in-plant construction of all homes are inspected by independent third party agencies to assure compliance with the Standards.

The installation of the home and any alterations made to the home shall conform to the requirements of the Federal Manufactured Home Construction and Safety Standards and the HUD Model Manufactured Home Installation Standards. These installation instructions are minimum requirements. Applicable local or state laws may have more stringent installation requirements than outlined in this manual and must be followed. Consult with the local authority having jurisdiction (LAHJ) for regulations that may require licenses and/or permits or which may affect procedures described in this manual.

DEFINITIONS

ANCHOR ASSEMBLY. Any device or other means designed to transfer home anchoring loads to the ground.

ANCHORING EQUIPMENT. Ties, straps, cables, turnbuckles, chains, and other approved components, including tensioning devices that are used to secure a home to anchor assemblies.

ANCHORING SYSTEM. A combination of anchoring equipment and anchor assemblies that will, when properly designed and installed, resist the uplift, overturning, and lateral forces on the home.

BASEMENT. A load bearing perimeter wall foundation that includes habitable space (finished or unfinished, heated or unheated) completely or partially below grade.

CRAWLSPACE. The space underneath the home's floor system, enclosed with either load- or non-load bearing perimeter walls. The ground may be covered with a concrete slab or by a plastic ground cover. Crawlspace walls must be vented and an access must be provided.

CROSSOVERS. Utility interconnections between sections of multi-section homes, including heating and cooling ducts, electrical circuits, and water pipes, drain plumbing, and gas lines.

DATA PLATE. An information sheet located on a cabinet door under the kitchen sink or on a wall panel or door face near the electrical panel, utility room or in the master bedroom closet. It contains a unique identification number and identifies the wind zone, roof load zone, and climatic zone for which the home was constructed.

DIAGONAL TIE. A tie intended to resist horizontal or shear forces, but which may resist vertical, uplift, and overturning forces.

FOOTING. That portion of the support system that transmits loads directly to the soil.

GROUND ANCHOR. A specific anchoring assembly device designed to transfer home loads to the ground.

H-BEAM. Steel H-beams, also called cross beams, are often used to support a home over a basement or crawlspace. They span across the foundation from sidewall to sidewall, typically with an intermediate support pier and footing (typically in the center point resulting in a line of piers under the centerline of a double section home).

INFORMATION PACKET. A set of important documents provided with the home including warranties, information on high wind coverage, and other features of the specific home.

INSTALLATION LICENSE. The proof that an installer meets the requirements for installing manufactured homes under the HUD-administered installation program.

LABELED. Equipment or materials to which has been attached a label, symbol, or other identifying mark of a certified testing laboratory, inspection agency, or other organization concerned with product evaluation. The label indicates compliance with nationally recognized standards or tests to determine suitable usage in a specified manner.

LISTED OR CERTIFIED. Included in a list published by a nationally recognized testing laboratory, inspection agency, or other organization concerned with product evaluation that maintains periodic inspection of production of listed equipment or materials, and whose listing states either that the equipment or material meets nationally recognized standards or has been tested and found suitable for use in a specified manner.

LOAD-BEARING PERIMETER WALL FOUNDATION. A support system for the home whereby the home is mechanically fastened to a structural wall(s) that transfers gravity, lateral and uplift loads to the ground.

LOCAL AUTHORITY HAVING JURISDICTION (LAHJ). The state, city, county, municipality, utility, or organization that has local responsibilities that must be complied with during the installation of a manufactured home.

MUST. Indicates a mandatory requirement.

N/A. Indicates not applicable.

PIER. That portion of the support system between the footing and the home, exclusive of shims. Types of piers include, but are not limited to: (1) manufactured steel stands; (2) pressure-treated wood; (3) manufactured concrete stands; (4) concrete blocks; and (5) portions of foundation walls.

PIER AND GROUND ANCHOR FOUNDATION. A support system for the home that employs piers under the chassis and other locations to support gravity loads and employs ground anchors and tie downs (the stabilizing system) to resist lateral and uplift loads.

PERIMETER BLOCKING. Regularly spaced piers supporting the sidewalls and marriage line of the home. Some homes require perimeter blocking in addition to supports under the home's frame.

QUALIFIED (OR LICENSED). Has the necessary knowledge and skills gained from experience and training that will allow performance of the job safely, competently, and in accordance with all applicable codes, standards, rules and regulations. Meets all necessary qualification tests including any license and certification requirements that may be in effect in the area where the home will be installed, including the requirements for installing manufactured homes under the HUD-administered installation program. The term does not incorporate a state-issued installation license or certification, except to the extent provided in this part. The term does not imply that HUD approves or recommends an installer or warrants the work of an installer, and should not be used in any way that indicates HUD approval in violation of 18 U.S.C. 709.

RAMADA. Any freestanding roof or shade structure, installed or erected over a home or any portion of the home.

SHOULD. Indicates a recommendation that is strongly advised but not mandatory.

SHALL. Indicates a mandatory requirement.

SITE FOR A HOME. A designated parcel of land designed for the accommodation of one home, its accessory buildings or structures, and accessory equipment, for the exclusive use of the occupants of the home.

SKIRTING. A weather-resistant material used to enclose the perimeter, under the living area of the home, from the bottom of the home to grade.

STABILIZING SYSTEM. All components of the anchoring and support systems, such as piers, footings, ties, anchoring equipment, ground anchors, or any other materials and methods of construction that support and secure the home to the ground.

SUPPORT SYSTEM. Pilings, columns, a combination of footings, piers, foundation walls, caps, and shims and any combination thereof that will, when properly installed, support and secure the home to the ground.

TIE. Straps, cable, or securing devices used to connect the home to anchoring assemblies.

UTILITY CONNECTION. The connection of the home to utilities that include, but are not limited to, electricity, water, sewer, gas, or fuel oil.

VERTICAL TIE. A tie intended to resist uplifting and overturning forces.

WIND ZONE. The areas designated on the Basic Wind Zone Map, as further defined in by the Manufactured Home Construction and Safety Standards

ENGINEER'S STAMP

Certain pages of this manual, display the seal of a registered engineer. Federal guidelines only require the seal from one state to be displayed, but the details herein apply to all states.

SYMBOLS USED IN THE MANUAL

This icon indicates an important warning. It is critical to heed these warnings.

This icon indicates a recommended best practice. While not required, following these practices will result in a superior installation, reducing the chance that cosmetic or durability related complaints might arise.

ABBREVIATIONS

ABS	Acrylonitrile Butadiene Styrene
ANSI	American National Standards Institute
APA	American Plywood Association
ASTM	American Society for Testing and Materials
AWPA	American Wood Preservers Association
CFM	Cubic feet per minute
CFR	Code of Federal Regulations
DWV	Drain, Waste, Vent
EMT	Electrical metallic tubing
FEMA	Federal Emergency Management Agency
ft	Foot/feet
ga	Gauge
HUD	US Department of Housing and Urban Development
in	Inch(es)
LAHJ	Local Authority Having Jurisdiction
lb(s)	Pound(s)
max.	Maximum
MHCSS	Manufactured Home Construction and Safety Standards
min.	Minimum
mph	Mile(s) per hour
NEC	National Electric Code
NFIP	National Flood Insurance Program
NFPA	National Fire Protection Association
o.c.	On center
OSHA	Occupational Safety and Health Administration
oz	Ounce(s)
p.	Page
psf	Pounds per square foot
psi	Pounds per square inch
SAA	State Administrative Agency
sq ft	Square foot/feet

ALTERNATIVE FOUNDATION SYSTEMS

Alternative foundation systems or designs are permitted in accordance with the following:

- System designs are prepared by a registered engineer or a registered architect or tested and certified by a registered engineer or registered architect in accordance with acceptable engineering practice and are manufactured and installed so as not to take the home out of compliance with the Manufactured Home Construction and Safety Standards.

NOTE: The Alternative Foundation Approval Form is located in **Appendix A**. Completion of this form will require the services of a registered professional enginer or registered architect. This form must be submitted to the manufacturer to request the use of an Alternative System that is not listed on the following website: **www.harthousing.com.** Click the **Tips & Tools** tab to view all DAPIA approved Alternative Systems.

DISPLAY AND STORAGE OF THE HOME

WEATHER PROTECTION

If the installation is not started immediately upon delivery of the home, the retailer and/or installer has the responsibility to ensure the exterior weather protection covering of marriage walls and the roof of homes has not been damaged during shipment. Inspect the home immediately upon the delivery and frequently during storage. Promptly repair tears in the home closure materials to prevent damage from the elements. Inspect and repair nail holes in roof shingles with asphalt cement or replace damaged shingles. Inspect and repair siding as needed.

SUPPORTING A HOME FOR DISPLAY

When a new home is to be displayed at a retail location, temporarily block and support the home. Set up homes with single block piers (maximum height per Table 9), metal piers or jack stands spaced no further apart than 12 feet o.c. beneath each I-beam. The tire and axle system may be used as one of these required supports, and the hitch jack may be used as another. Locate the first support no further than two feet from the rear end of the home (**Figure 1**). Place additional supports along the perimeter on either side of openings greater than four feet (i.e. sliding glass doors, bay windows, etc.). For 18' wide homes, perimeter supports must also be spaced no further than 12 feet o.c.

For multi section homes, locate additional supports along the marriage line under support columns. These locations will be marked by the manufacturer.

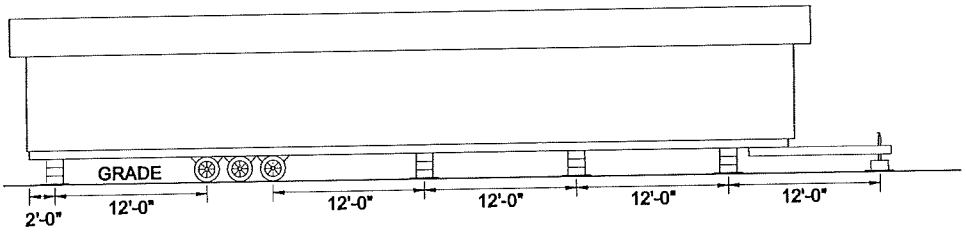

Figure 1. *Supporting a home for display*

For all homes, place footings below each support. Footings may be placed directly on the surface grade without excavation and may be ABS pads, 2 x 10 by 16 inch long pressure treated lumber or 16" x 16" by 4 inch thick concrete pads.

SUPPORTING A HOME FOR STORAGE

To prevent damage to homes being stored at the manufacturer's facility, model home center or the home site, but not on display (i.e. people shall not be permitted inside the home) for a period exceeding 30 days, locate supports below each I-beam no further than two feet from each end of the home and at the approximate center of the home length. For 18' wide homes, perimeter supports must also be spaced no further than 12 feet o.c.

Whether the home is being supported for display or storage the height of the home should be no higher than 48 inches as measured from the top of the ground to the bottom of the I-beam. In addition, it is extremely important that the roof/ridge vents are installed while the home is on display. Failure to install the roof/ridge vents may lead to significant damage to the roof and home.

Getting Started

This chapter covers a few steps that, taken now, will avoid problems later in the installation process.

Follow the Steps below:

- STEP 1. LOCATE THE DATA PLATE (p. 10)
- STEP 2. CONFIRM WIND ZONE (p. 10)
- STEP 3. CONFIRM THERMAL ZONE (p. 11)
- STEP 4. CONFIRM ROOF-LOAD ZONE (p. 13)
- STEP 5. CHECK LOCAL CODES AND SECURE PERMITS (p. 14)

STEP 1. LOCATE THE DATA PLATE

Locate the data plate inside the home (**Figure 2**), typically inside a kitchen cabinet door or on a wall panel or door face near the electrical panel, utility room or bedroom closet.

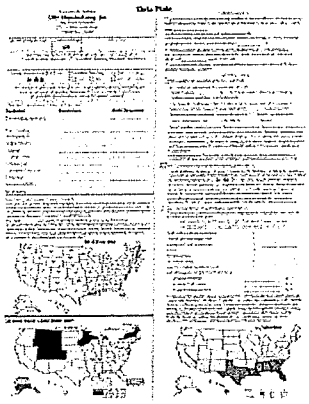

Figure 2. *Sample data plate – shown as reference only, actual data plate may vary.*

The information on the data plate will be used to verify that the home was designed for the proper location.

STEP 2. CONFIRM WIND ZONE

From **Table 1**, identify the wind zone for the home. Verify that the home conforms to the following rules and any special requirements determined by the LAHJ.

- No home may be located in a higher wind zone than that indicated on the data plate. (Example: a home designed for Wind Zone II cannot be placed in Wind Zone III.)
- A home may be located in a lower wind zone than that indicated on the data plate. (Example: a home designed for Wind Zone II can be placed in either Wind Zone II or I.) When a home is located in a lower wind zone than indicated on the data plate it may be installed per the requirements of the lower wind zone.
- Homes located within 1,500 feet of the coastline in Wind Zones II and III must be designed to withstand exposure 'D' conditions. This will be indicated on the data plate.

If the home does not conform to these rules, contact the manufacturer immediately.

TABLE 1. WIND ZONE BY LOCALITY

Wind Zone I	
All areas except those areas listed below as being within Wind Zone II or III	
Wind Zone II	
Alabama	Counties of Baldwin and Mobile
Florida	All counties except those listed below as within Wind Zone III
Georgia	Counties of Bryan, Camden, Chatham, Glynn, Liberty, McIntosh
Louisiana	Parishes of Acadia, Allen, Ascension, Assumption, Calcasieu, Cameron, East Baton Rouge, East Feliciana, Evangeline, Iberia, Iberville, Jefferson Davis, Lafayette, Livingston, Pointe Coupee, St. Helena, St. James, St. John the Baptist, St. Landry, St. Martin, St. Tammany, Tangipahoa, Vermillion, Washington, West Baton Rouge, and West Feliciana
Maine	Counties of Hancock and Washington
Massachusetts	Counties of Barnstable, Bristol, Dukes, Nantucket, and Plymouth
Mississippi	Counties of George, Hancock, Harrison, Jackson, Pearl River, and Stone
North Carolina	Counties of Beaufort, Brunswick, Camden, Chowan, Columbus, Craven, Currituck, Jones, New Hanover, Onslow, Pamlico, Pasquotank, Pender, Perquimans, Tyrrell, and Washington
South Carolina	Counties of Beaufort, Berkeley, Charleston, Colleton, Dorchester, Georgetown, Horry, Jasper, and Willlamsburg
Texas	Counties of Aransas, Brazoria, Calhoun, Cameron, Chambers, Galveston, Jefferson, Kenedy, Kleberg, Matagorda, Nueces, Orange, Refugio, San Patricio, and Willacy
Virginia	Cities of Chesapeake, Norfolk, Portsmouth, Princess Anne, and Virginia Beach
Wind Zone III	
Hawaii	Entire state
Alaska	Coastal regions (as determined by the 90 mph isotach on the ANSI/ASCE 7-88 map)
Florida	Counties of Broward, Charlotte, Collier, Dade, Franklin, Gulf, Hendry, Lee, Martin, Manatee, Monroe, Palm Beach, Pinellas, and Sarasota
Louisiana	Parishes of Jefferson, La Fourche, Orleans, Plaquemines, St. Bernard, St. Charles, St. Mary, and Terrebonne
North Carolina	Counties of Carteret, Dare, and Hyde
Other	All regions of the U.S. Territories of American Samoa, Guam, Northern Mariana Islands, Puerto Rico, Trust Territory of the Pacific Islands, and the United States Virgin Islands

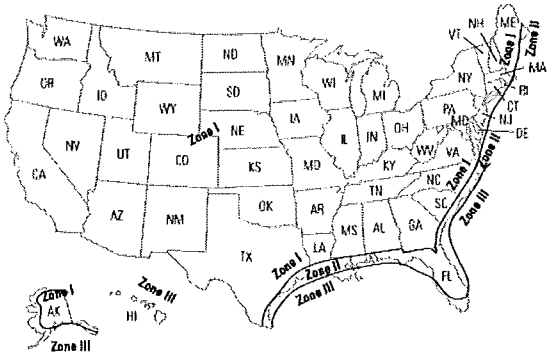

Figure 2A. *Wind zone map*

STEP 3. CONFIRM THERMAL ZONE

From **Table 2**, identify the thermal (UO) zone for the home. Verify that the home conforms to the following rules.

- No home may be located in an area with a higher thermal zone number than that indicated on the data plate. (Example: a home designed for Thermal Zone 2 cannot be placed in Thermal Zone 3.)

- A home may be located in a lower thermal zone than that indicated on the data plate. (Example: a home designed for Thermal Zone 2 may be placed in either Thermal Zone 2 or 1.).
- In no case may a home designated for installation in the "Humid & Fringe Climate," as identified on the data plate, be located outside of this region (**Table 2**).

If the home does not conform to these rules, contact the manufacturer immediately.

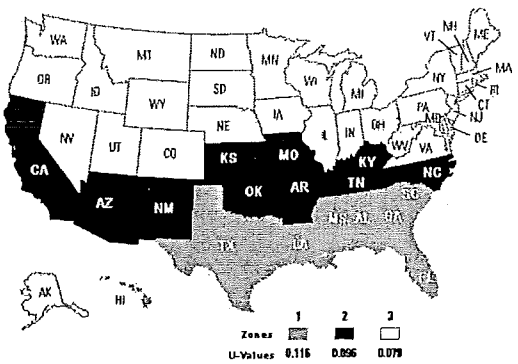

Figure 3. *Thermal (Uo) zone map*

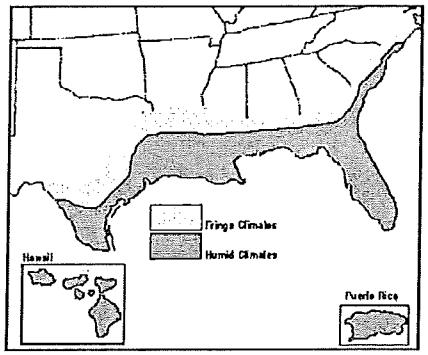

Figure 3A. *Humid & fringe climate map*

TABLE 2. HUMID AND FRINGE CLIMATE ZONES

Humid and Fringe Climate Zone	
Alabama	Counties of Baldwin, Barbour, Bullock, Butler, Choctaw, Clarke, Coffee, Conecuh, Covington, Cerenshaw, Dale, Escambia, Geneva, Henry, Houston, Lowndes, Marengo, Mobile, Monroe, Montgomery, Pike, Washington, and Wilcox
Florida	All counties and locations
Georgia	Counties of Appling, Atkinson, Bacon, Baker, Ben Hill, Berrien, Brantley, Brooks, Bryan, Calhoun, Camden, Charleton, Chatham, Clay, Clinch, Coffee, Colquitt, Cook, Crisp, Decatur, Dougherty, Early, Echols, Effingham, Evans, Glynn, Grady, Irwin, Jeff Davis, Lanier, Lee, Liberty, Long, Lowndes, McIntosh, Miller, Mitchell, Pierce, Quitman, Randolph, Seminole, Tattnall, Terrell, Thomas, Tift, Turner, Ware, Wayne, and Worth
Hawaii	All counties and locations
Louisiana	All counties and locations
Mississippi	Counties of Adams, Amite, Claiborne, Clarke, Copiah, Covington, Forrest, Franklin, George, Greene, Hancock, Harrison, Hinds, Issaquena, Jackson, Jasper, Jefferson, Jefferson Davis, Jones, Lamar, Lawrence, Lincoln, Marion, Pearl River, Perry, Pike, Rankin, Simpson, Smith, Stone, Walthall, Warren, Wayne, and Wilkinson
North Carolina	Counties of Brunswick, Carteret, Columbus, New Hanover, Onslow, and Pender
South Carolina	Counties of Beaufort, Berkeley, Charleston, Colleton, Dorchester, Georgetown, Horry and Jasper
Texas	Counties of Anderson, Angelina, Aransas, Atascosa, Austin, Bastrop, Bee, Bexar, Brazoria, Brazos, Brooks, Burleson, Caldwell, Calhoun, Cameron, Camp, Cass, Chambers, Cherokee, Colorado, Comal, De Witt, Dimmit, Duval, Falls, Fayette, Fort Bend, Franklin, Freestone, Frio, Galveston, Goliad, Gonzales, Gregg, Grimes, Guadalupe,

	Hardin, Harris, Harrison, Hays, Henderson, Hidalgo, Hopkins, Houston, Jackson, Jasper, Jefferson, Jim Hogg, Jim Wells, Karnes, Kaufman, Kenedy, Kinney, Kleberg, La Salle, Lavaca, Lee, Leon, Liberty, Limestone, Live Oak, Madison, Marion, Matagorda, Maverick, McMullen, Medina, Milam, Montgomery, Morris, Nacogdoches, Navarro, Newton, Nueces, Orange, Panola, Polk, Rains, Refugio, Robertson, Rusk, Sabine, San Augustine, San Jacinto, San Patricio, Shelby, Smith, Starr, Titus, Travis, Trinity, Tyler, Upshur, Uvalde, Val Verde, Van Zandt, Victoria, Walker, Waller, Washington, Webb, Wharton, Willacy, Williamson, Wilson, Wood, Zapata, and Zavala

STEP 4. CONFIRM ROOF LOAD ZONE

From **Table 3**, identify the Roof Load Zone for the home. Verify that the home conforms to the following rules.

- No home may be placed in an area with a higher roof load than that indicated on the data plate. (Example: a home designed for the South (20 psf) Roof Load Zone cannot be placed in the Middle (30 psf) Roof Load Zone).
- A home may be located in an area with a lower roof load than that indicated on the data plate. (Example: a home designed for the Middle (30 psf) Roof Load Zone may be placed in the South (20 psf) Roof Load Zone). When a home is located in an area with a lower roof load than indicated on the data plate it may be installed per the requirements of the lower roof load area.
- **There are special high roof load areas (primarily in mountains) not shown on the map. Contact the LAHJ or SAA for information about these areas. The home's data plate will indicate if the home has been designed for one of these high roof load areas.**
- Ramadas may be used in areas with roof live loads greater than 40 psf. Ramadas are to be self-supporting, except that any connection to the home must be for weatherproofing only.

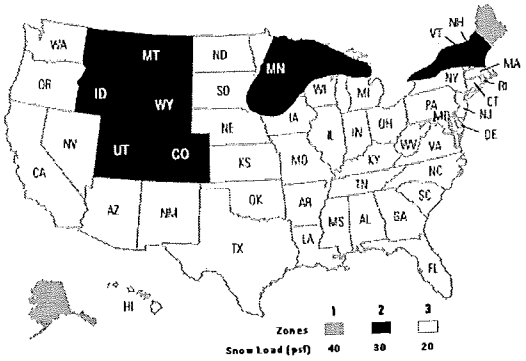

Figure 3B. *Roof (snow) load map*

TABLE 3. ROOF LOADS BY LOCALITY

North (40 psf roof load)	
Alaska	All counties
Maine	Counties of Aroostook, Piscataquis, Somerset, Penobscot, Waldo, Knox, Hancock, Washington
Middle (30 psf roof load)	
Colorado	All counties
Idaho	All counties
Iowa	Counties of: Buena Vista, Butler, Calhoun, Cerro Gordo, Cherokee, Chickasaw, Clay, Dickinson, Emmet, Floyd, Franklin, Hamilton, Hancock, Hardin, Howard, Humboldt, Ida, Kossuth, Lyon, Mitchell, O'Brien, Osceola, Palo Alto, Plymouth, Pocahontas, Sac, Sioux, Webster, Winnebago, Worth, Wright
Maine	Counties of Androscoggin, Cumberland, Franklin, Kanabec, Lincoln, Oxford, Sagadahoc, York
Massachusetts	County of Essex
Michigan	Counties of Alger, Alcona, Alpena, Antrim, Baraga, Benzie, Charlevoix, Cheboygan, Chippewa, Crawford, Delta, Dickson, Emmet, Gogebic, Grand Traverse, Houghton, Iron, Kalkaska, Keweenaw, Leelanau, Luce, Mackinac, Marquette, Menominee, Missaukee, Montmorency, Ogemaw, Ontonagon, Oscoda, Otsego, Presque Isle, Roscommon, Schoolcraft, Wexford
Minnesota	Counties of Aitkin, Anoka, Benton, Blue Earth, Brown, Cass, Carlton, Carver, Chippewa, Chisago, Cook, Cottonwood, Crow Wing, Dakota, Dodge, Douglas, Faribault, Fillmore, Freeborn, Goodhue, Grant, Hennepin, Hubbard, Itasca, Isanti, Jackson, Kandiyohi, Kanabec, Koochiching, Lac qui Parle, Lake, Le Sueur, Lincoln, Lyon, McLeod,

	Meeker, Morrison, Millie Lacs, Mower, Martin, Murray, Nicollet, Nobles, Olmsted, Pipestone, Pine, Pope, Ramsey, Redwood, Renville, Rice, Rock, St. Louis, Sibley, Scott, Steele, Sherburne, Swift, Stearns, Stevens, Todd, Wadena, Wright, Washington, Wabasha, Winona, Waseca, Watonwan, Yellow Medicine
Montana	All Counties
New Hampshire	All Counties
New York	Counties of Cayuga, Clinton, Essex, Erie, Franklin, Fulton, Genesee, Hamilton, Herkimer, Jefferson, Lewis, Livingston, Madison, Monroe, Montgomery, Niagara, Oneida, Onondaga Ontario, Orleans, Oswego, St. Lawrence, Saratoga, Schenectady, Seneca, Warren, Washington, Wayne, Wyoming, Yates
South Dakota	Counties of Brookings, Clay, Codington, Deuel, Grant, Hamlin, Hanson, Hutchinson, Kingsbury, Lake, Lincoln, McCook, Miner, Minnehaha, Moody, Turner, Union, Yankton
Utah	All Counties
Vermont	Counties of Addison, Caledonia, Chittenden, Essex, Franklin, Grand Isle, Lamoille, Orange, Orleans, Rutland, Washington, Windsor
Wisconsin	Counties of Ashland, Bayfield, Barron, Buffalo, Burnett, Clark, Chippewa, Door, Douglas, Dunn, Eau Claire, Florence, Forest, Iron, Jackson, Langlade, Lincoln, Marathon, Marinette, Menominee, Oconto, Oneida, Pepin, Pierce, Polk, Price, Rusk, St. Croix, Sawyer, Taylor, Trempealeau, Vilas, Washburn
Wyoming	All Counties
South (20 psf roof load)	
Other	The states and counties not listed for the Middle or North roof load zone above are deemed to be within the South roof load zone.

Is the data plate present and the home placed in the appropriate wind, thermal and roof load zones?

- ▶ **YES**, go to **STEP 5. CHECK LOCAL CODES AND SECURE PERMITS** (p. 14).
- ▶ **NO**, Stop installation activities and notify the home retailer.

STEP 5. CHECK LOCAL CODES AND SECURE PERMITS

Local regulations may set conditions for the siting and installation of a manufactured home. Consult the LAHJ, state manufactured housing association and the state SAA (See **Resources**, p. 5) for the specific local requirements, including:

- Building codes that may affect the construction of site built structures and infrastructure.
- Local requirements regulating the installation of manufactured homes.
- Setback requirements for property lines, streets, yards, and courts.
- Fire separation distances.
- Development covenants for the specific property.
- The locations of flood hazard areas and any special foundation requirements for homes installed in those areas.
- In some areas, building permits are required to install manufactured homes. Prior to making any alteration to the site and the home, contact the LAHJ to determine if plan approval and permits are required.

Areas subject to flooding. The foundation specifications contained in this manual are NOT intended to address flood loads. If the home is located in the flood plain, consult a registered engineer.

▶ go to **Prepare the Site** (p. 15)

Prepare the Site

A properly prepared site is critical to a good quality installation and the long term structural stability of the home.

This chapter explains the process of planning the site, evaluating the soil, and preparing the site for construction of the home's support system.

Follow the Steps below:

- **STEP 1. PLAN SITE ACCESS** (p. 15)
- **STEP 2. DETERMINE HOME LOCATION AND LAYOUT** (p. 15)
- **STEP 3. CLEAR AND GRADE THE SITE** (p. 16)
- **STEP 4. DETERMINE SOIL CONDITIONS** (p. 16)
- **STEP 5. DETERMINE SOIL BEARING CAPACITY AND FROST LINE** (p. 17)
- **STEP 6. DETERMINE GROUND ANCHOR HOLDING CAPACITY** (p. 19)

STEP 1. PLAN SITE ACCESS

Planning the route to the site is typically the responsibility of the retailer or transportation company. Whoever is responsible must secure state permits from the states through which the home will pass.

In planning the route, avoid obstructions that might interfere with the passage of the home, such as low hanging wires and trees, low overpasses and bridges not suitable for the load. Contact the utility company if wires need to be moved. Do not allow branches, bushes or other foliage to scrape against the home as the home is moved to the site. Avoid ditches, berms, steep slopes and soft ground. Identify and fill any holes and soft spots into which the transporter's wheels may sink. Avoid moving over steep changes in grade (20 degrees or more).

If required, provide for home storage and staging areas on the site. Plan the delivery and staging of home sections and materials so that after all deliveries are complete, home sections and materials can be accessed for use and installed in the appropriate sequence. Orient home sections so they do not have to be rotated or excessively maneuvered during the installation process. Plan for temporary needs, such as dumpsters, portable toilets, crew parking, delivery vehicle drop-offs and concrete mixer deliveries.

Before moving the home to the site, inform the LAHJ and make sure the site is prepared and utilities are available.

Site Preparation. Final responsibility for site preparation, including soil stability and frost heave control, lies with the installer. An improperly prepared site may result in the denial of a foundation-related warranty claim.

STEP 2. DETERMINE HOME LOCATION AND LAYOUT

The home location may have already been determined by others. If not, plan the home location and layout in compliance with the regulations researched in **Getting Started, STEP 5. CHECK LOCAL CODES AND SECURE PERMITS** (p. 14). Contact utilities for locations of existing infrastructure, such as underground cables, pipes and electrical lines.

When planning the site improvements, consider the following:

- The home location should be level.
- Avoid contact with large trees, steep slopes, poorly drained areas and potential flood zones.
- Preserve trees and shrubs for shade, visual screens and windbreaks.

Fire separation. Comply with any LAHJ fire separation requirements or the requirements NFPA 501A, 2003 edition (Chapter 6).

- Plan the driveway, parking areas, septic, well, other structures and utility lines.
- Consider future additions, such as screen rooms, porches and awnings.
- Site the home away from natural water paths.

STEP 3. CLEAR AND GRADE THE SITE

Trim overhanging foliage (tree limbs, etc. that could cause damage to the home) considering future growth, potential storms, swaying in wind and snow/ice-weighted branches. All organic material such as vegetation, wood, roots, twigs, dead branches, grass, brush and wood scraps must be removed in areas where footings are to be placed. Remove any debris that could become termite infested from the site and surrounding area. Properly dispose of all items.

Crown the site (**Figure 4**) away from the foundation for the first ten feet with a minimum slope of 1/2 inch per foot. Where property lines, walls, slopes or other physical conditions prohibit this slope, provide the site with drains, swales or grading to drain water away from the structure. Any fill required to grade the site should be inorganic "controlled fill" applied in a maximum of four inch layers, compacted between each layer to at least 90% of its maximum relative density. Direct runoff away from the site using ditches and berms (**Figure 5**). If the home will have skirting, start grading from two feet in from the edge of the home.

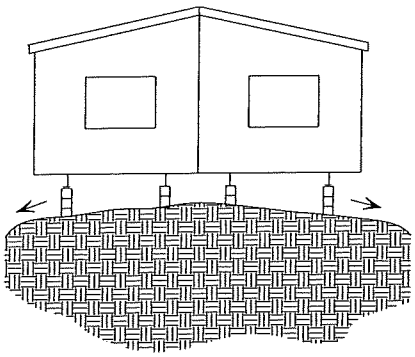

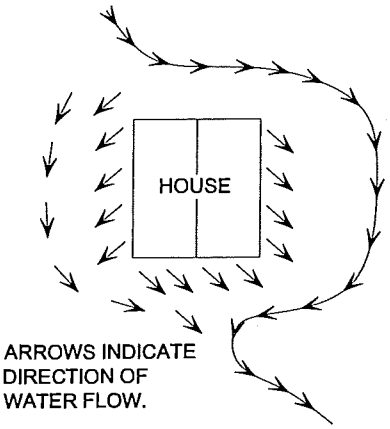

Figure 4. *Crown the soil under the home to prevent water ponding*

Figure 5. *Direct runoff away from the home*

Grade the ground so that water under porches, decks and recessed entries flows away from the home. If proper grading is not possible, use other methods such as a drain tile and automatic sump pump system to remove any water that may collect under the home.

The home is suitable for the installation of gutters and downspouts. Gutters and downspouts must be installed per the gutter and downspout manufacturer's installation instructions. When gutters and downspouts are installed, direct runoff away from the home.

Site drainage. Moisture under the home can result in structural damage to the floor system, foundation, anchoring system and other parts of the home. Failure to provide adequate slope/drainage can result in moisture-related problems such as mold, mildew and erosion.

STEP 4. DETERMINE SOIL CONDITIONS

Examine the soil type under the proposed home location to make sure it is suitable for placement of a home. The design of the home's support system, including footing/pier spacing and size, will in part be determined by the bearing capacity of the soil and, if ground anchors are used, by the soil's withdrawal strength.

The soil under every portion of the support system must meet the following criteria:

- The soil must be firm and undisturbed (not previously excavated) or fill com-

Soil. Inadequate soil bearing capacity or a support system mismatched to the soil characteristics can result in excessive or differential

pacted to at least 90% of its maximum relative density). Uncompacted fill will settle over time, causing the home to shift and become unlevel.

- Fill must not contain large debris. This too will settle over time.
- The soil must not be comprised of organic clays or peat. Organic material can decay, causing settlement and also may harbor pests that can infest the home.
- The water table must be below the lowest level of the planned support system/foundation. A soil's bearing capacity can be greatly reduced when it is saturated with water. Note that water tables may vary with seasonal or climactic conditions. Consult a geologist or the LAHJ if you are unsure of the water table level.
- The soil must not be a highly expansive type. Expansive soils can expand when they become saturated with water, causing the home to shift and become unlevel. If soils are expansive contact a registered engineer, or registered architect to assist with the design of the foundation system.

settlement of the home, which can cause the home to become unlevel, resulting in jammed doors and windows, cracks in finishes and ruptured plumbing connections.

Does the soil meet these criteria?

- ▶ **YES**, go to **STEP 5, DETERMINE SOIL BEARING CAPACITY AND FROST LINE**, (p. 17).
- ▶ **NO**, Consult a registered engineer, registered architect, or geologist to determine a suitable soil bearing capacity.

STEP 5. DETERMINE SOIL BEARING CAPACITY AND FROST LINE

The soil under a home must be capable of withstanding the loads imposed by the weight of the home, its support system and furnishings as well as any loads imposed by wind, snow or other climactic conditions.

SOIL BEARING CAPACITY

Determine the soil bearing capacity in pounds per square foot (psf) before designing a support system. The higher the capacity (psf), the more weight the soil can hold without unduly compressing. As the soil bearing capacity increases, footings can be reduced in size or spaced farther apart.

Use one or more of the following methods to determine the site's soil bearing capacity:

- **Test the soil.** Hire a registered geologist, registered engineer, or registered architect to determine the soil classification and maximum allowable soil bearing capacity by testing the soil in accordance with generally accepted engineering practice.
- **Obtain soil records.** The local office of the U.S. Department of Agriculture's Natural Resources Conservation Service (www.soils.usda.gov) and/or the LAHJ may have test results and/or soil analyses on file for the area.
- **Conduct a pocket penetrometer test.** Use a pocket penetrometer to estimate allowable soil bearing capacity as follows:
  1. Select a location that will be under a footing.
  2. Clear a minimum area of one square foot to the depth of the bottom of the planned footing.
  3. Using the instructions provided with the pocket penetrometer, take at least five readings.
  4. Discard the high and low readings and average the remaining readings. Round this result down to the nearest soil bearing value shown in **Table 4**.
  5. Confirm that the rounded result matches the soil description in **Table 4**.
- **Determine soil bearing value by visual examination.** If one of the options above is not available, the values in **Table 4** can be used to establish soil bearing capacity by visual examination. This method provides lower capacity values than the options above. Accurate soil identification typically requires

Soil bearing capacity. Support systems on soils with bearing capacities less than 1,000 psf must be designed by a registered engineer or registered architect and approved by the LAHJ.

Limitations of Pocket penetrometers. Pocket penetrometers do not work on sand or gravel. Use to determine allowable pressure for these types of soils. If you encounter a layer of gravel, test the soil under the gravel. Do not put the penetrometer on stones larger than its tip as this will provide an inaccurate reading.

special training or expertise. An engineer or building code official may be able to assist in classifying the soil found on the site.

TABLE 4. SOIL BEARING CAPACITY BY SOIL TYPE

Soil Classification					
Classification Number	ASTM D 2487-00 or D 2488-00 (incorporated by reference, see 3285.4)	Soil Description	Allowable Soil Bearing Pressure (psf)[1]	Blow Count ASTM D 1586-99	Torque Probe[3] Value[4] (inch-pounds)
1	-	Rock or hard pan	4,000+		
2	GW, GP, SW, SP, GM, SM	Sandy gravel and gravel; very dense and/or cemented sands; course gravel/cobbles; pre-loaded silts, clays and coral	2,000	40+	More than 550
3	GC, SC, ML, CL	Sand; silty sand; clayey sand; silty gravel; medium dense course sands; sandy gravel; and very stiff silt, sand clays	1,500	24-39	351-550
4A	CG, MH[2]	Loose to medium dense sands; firm to stiff clays and silts; alluvial fills	1,000	18-23	276 – 350
4B	CH, MH[2]	Loose sands; firm clays; alluvial fills	1,000	12-17	175-275
5	OL, OH, PT	Uncompacted fill; peat; organic clays	Refer to 3285.202(e)	0-11	Less than175

Notes

[1] The values provided in this table have not been adjusted for overburden pressure, embedment depth, water table height or settlement problems.
[2] For soils classified as CH or MH, without either torque probe values or blow count test results, selected anchors must be rated for a 4B soil.
[3] The torque test probe is a device for measuring the torque value of soils to assist in evaluating the holding capacity of the soil in which the ground anchor is placed. The shaft must be of suitable length for the full depth of the ground anchor.
[4] The torque value is a measure of the load resistance provided by the soil when subject to the turning or twisting force of the probe.

- **Use default capacity.** Use an allowable pressure of 1,500 psf, unless site-specific information requires the use of lower values based on soil classification and type according to **Table 4**.

Note that soil types may vary across a home site. In this case, the soil with the lowest bearing capacity should be assumed when designing the support system. Keep a record of the soil bearing capacity value; it will be used later to design the home's support system.

FROST LINE

Shown below is a map with recommended average depths of frost penetration. However, it is also recommended to consult the LAHJ, a registered engineer or registered architect to determine the depth of the frost line when possible. Keep a record of the frost depth; it will be used later to design the home's support system.

FROST PENETRATION MAP (AVERAGE DEPTH OF FROST PENETRATION - IN INCHES)

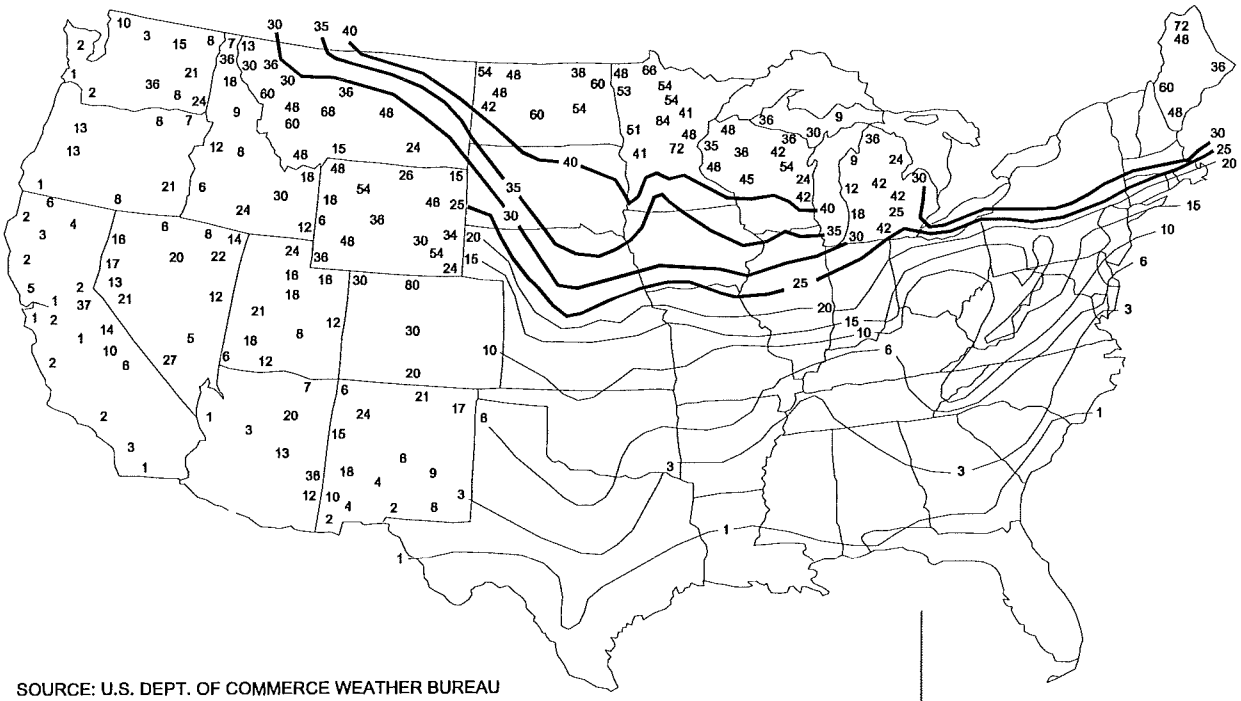

SOURCE: U.S. DEPT. OF COMMERCE WEATHER BUREAU

Figure 5A. *Frost Penetration Map*

Will this installation use auger-type ground anchors?

- ▶ YES, go to STEP 6, DETERMINE GROUND ANCHOR HOLDING CAPACITY, (p. 19)
- ▶ NO, go to Construct Foundation, (p. 35)

STEP 6. DETERMINE GROUND ANCHOR HOLDING CAPACITY

If the anchor holding strength of the soil is unknown test the soil per the requirements of the anchor manufacturer's installation instructions.

Torque Probe. If a torque probe is used, check with the utility companies for the location of underground cables or pipes to avoid contact with the probe shaft.

What type of support system will this installation use?

- ▶ **For pier and ground anchor,** go to **Install Stabilizing Systems,** (p. 74)
- ▶ **For load bearing perimeter wall,** go to **Construct Foundation,** (p. 35)

Install Footings

This chapter provides instructions for the design and construction of individual footings that transfer the load from a single pier to the ground. A footing and pier together (discussed in **Set the Home**) is referred to as a "support". A footing may also be designed to carry the load of multiple piers (often called "strip" footings). The design of strip footings is not covered in this manual. However, strip footings are acceptable if designed by a registered engineer or registered architect. The foundation systems described in this manual have not been designed for flood resistance.

Follow the Steps below:

- STEP 1. DESIGN POINT LOAD SUPPORTS (p. 20)
- STEP 2. DESIGN FRAME SUPPORTS (Homes Without Perimeter Blocking) (p. 23)
- STEP 3. DESIGN FRAME AND PERIMETER SUPPORTS (Homes With Perimeter Blocking) (p.25)
- STEP 4. SELECT FOOTING MATERIALS (p. 30)
- STEP 5. SIZE FOOTINGS (p. 31)
- STEP 6. INSTALL FOOTINGS (p. 33)

STEP 1. DESIGN POINT LOAD SUPPORTS

All homes will need supports, and therefore footings, under the frame, marriage line (for multi-section homes), exterior wall openings and other heavy point loads.

All pier locations required at the mating line, perimeter and any special pier support locations, as required by these instructions, will be identified from the factory by a pier tag, label, paint, or other means and must be visible after the home is installed. The pier designs, support loads, and footing construction shall be as indicated in the appropriate diagrams, tables, and instructions herein. Where perimeter piers are required along the exterior wall, alternate pier spacing may be used in lieu of the factory identified locations provided the instructions of this manual are satisfied in terms of allowable spacing, pier design, and footing size.

PLEASE NOTE: The manufacturer will not be responsible for damaged or removed pier tags. It is the responsibility of the installer to ensure that all piers are properly positioned in accordance with the tables & diagrams contained in these installation instructions.

Create a sketch of the home that includes the exterior walls, the frame I-beams and the marriage line(s), if a multi-section home. The sketch will be used in this chapter to locate each support, and note the size of the corresponding footing. **Figure 6** is an example of such a completed support plan.

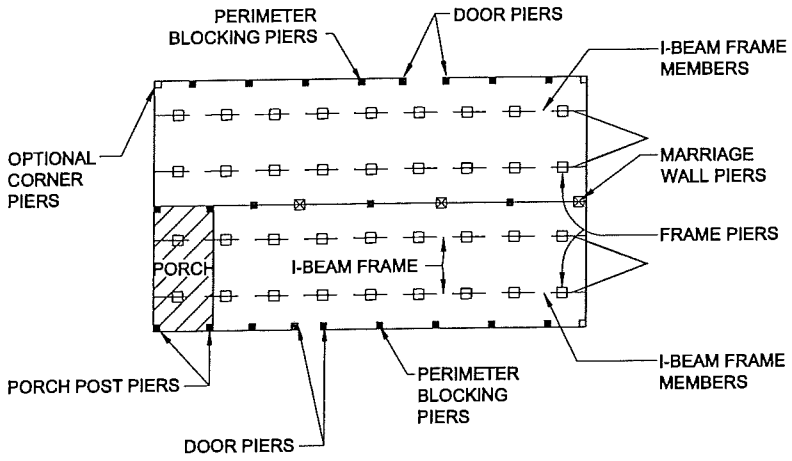

Figure 6. *Typical point-load support locations*

High roof loads. For roof loads of 40 psf or greater, a registered engineer or registered architect must determine the maximum marriage wall opening permitted without pier or other supports.

As the location and load for each support is determined, note it on the sketch. When selecting locations for supports, keep in mind that increasing the spacing between supports will increase the load on that support and the size of the required footing.

DETERMINE LOCATIONS

Point loads exist where a bearing/structural weight is concentrated and transferred to the foundation at a specific point. Locate a support under each point load, including the following examples:

- Exterior doors in side walls at both sides of each door (blocking is not required at exterior doors in end walls supported by the steel header).
- Other exterior wall openings four feet and greater at both sides of each opening (including multiple windows that total four feet wide or more without intermediate supports, even if individual windows are less than four feet).
- Marriage line openings four feet or greater at both sides of each opening.
- Locations where through-the-rim crossover ducts penetrate the rim joist at the marriage line (unless otherwise noted in supplemental documents provided with the home or unless the home is constructed with a perimeter frame system).
- Marriage line columns.
- Load-bearing porch posts.
- On each side of factory installed fireplaces when located on the exterior sidewalls or marriage walls (except when supported by the steel header).

Adjustable outriggers may only be used to replace piers below exterior door or window openings less than 48" and below factory installed fireplaces located on the exterior sidewalls or marriage walls. Adjustable outriggers may only be used at these locations when local codes permit the use of these devices and they are installed according to the manufacturer's installation instructions. Adjustable outriggers are not an acceptable replacement for perimeter supports on homes requiring perimeter blocking. Factory installed outriggers and cross-members may also replace piers below exterior door or window openings less than 48".

Mark the required point load support locations on the sketch. Supports are not required where the manufacturer has reinforced the floor (such as with additional outriggers or floor joists) and so noted in the documentation provided with the home.

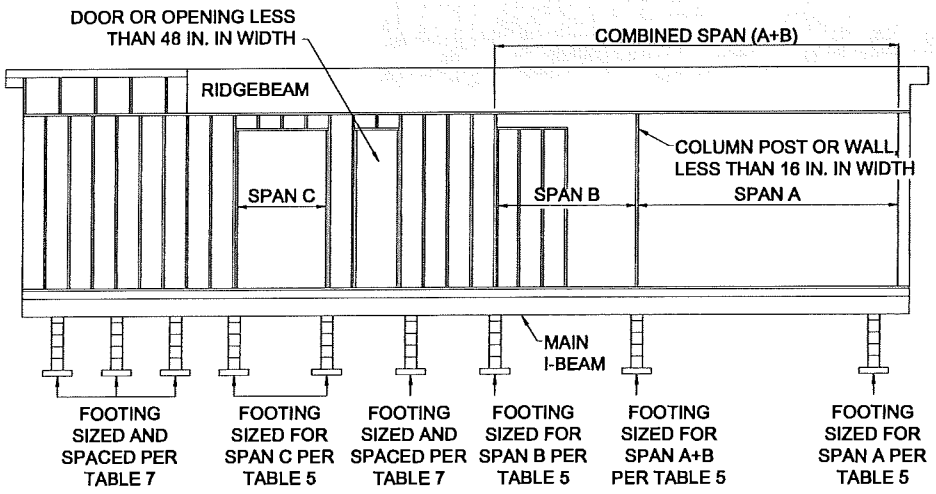

Figure 7. *Typical point-load support locations along the marriage line.*

CALCULATE LOADS

Use **Tables 5-5c** to determine the loads on point load supports (columns). For each support, find the table with the appropriate section width. Then, find the row with the appropriate roof load zone and the column corresponding to the span (see **Figure 7** for guidance on determining spans — if a support is shared by spans on both sides, add the respective loads together to arrive at the total load under that point). The number in the intersecting cell is the load.

Note the required loads next to each point load support on the sketch.

Install Footings

TABLE 5. POINT LOAD ON FOOTINGS AT MARRIAGE LINE OPENINGS (LBS)

20 ft Max. Home Width

Roof Live Load (PSF)	Maximum Opening in Marriage Line (ft)									
	4	8	12	14	16	18	20	24	28	32
20	1000	1600	2200	2500	2800	3100	3400	4000	4600	5200
30	2000	2800	3600	4000	4400	4800	5200	6000	6800	7600
40	2400	3400	4400	4900	5400	5900	6400	7400	8400	9400
60	3200	4600	6000	6700	7400	8100	8800	10200	11600	13000
80	4000	5800	7600	8500	9400	10300	11200	13000	14800	16600
100	4800	7000	9200	10300	11400	12500	13600	15800	18000	20200
120	5600	8200	10800	12100	13400	14700	16000	18600	21200	23800

TABLE 5a. POINT LOAD ON FOOTINGS AT MARRIAGE LINE OPENINGS (LBS)

24 ft Double Section /36 ft Triple Section Max. Home Width

Roof Live Load (PSF)	Maximum Opening in Marriage Line (ft)									
	4	8	12	14	16	18	20	24	28	32
20	1120	1840	2560	2920	3280	3640	4000	4720	5440	6160
30	2320	3280	4240	4720	5200	5680	6160	7120	8080	9040
40	2800	4000	5200	5800	6400	7000	7600	8800	10000	11200
60	3760	5440	7120	7960	8800	9640	10480	12160	13840	15520
80	4720	6880	9040	10120	11200	12280	13360	15520	17680	19840
100	5680	8320	10960	12280	13600	14920	16240	18880	21520	24160
120	6640	9760	12880	14440	16000	17560	19120	22240	25360	28480

TABLE 5b. POINT LOAD ON FOOTINGS AT MARRIAGE LINE OPENINGS (LBS)

28 ft Double Section /42 ft Triple Section Max. Home Width

Roof Live Load (PSF)	Maximum Opening in Marriage Line (ft)									
	4	8	12	14	16	18	20	24	28	32
20	1240	2080	2920	3340	3760	4180	4600	5440	6280	7120
30	2640	3760	4880	5440	6000	6560	7120	8240	9360	10480
40	3200	4600	6000	6700	7400	8100	8800	10200	11600	13000
60	4320	6280	8240	9220	10200	11180	12160	14120	16080	18040
80	5440	7960	10480	11740	13000	14260	15520	18040	20560	23080
100	6560	9640	12720	14260	15800	17340	18880	21960	25040	28120
120	7680	11320	14960	16780	18600	20420	22240	25880	29520	33160

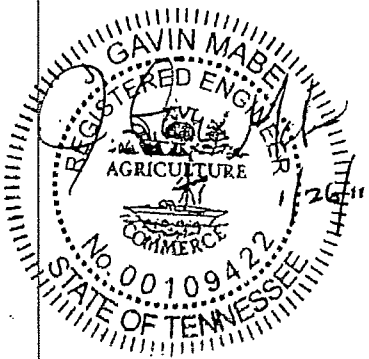

TABLE 5c. POINT LOAD ON FOOTINGS AT MARRIAGE LINE OPENINGS (LBS)

32 ft Double Section /48 ft Triple Section Max. Home Width

Roof Live Load (PSF)	Maximum Opening in Marriage Line (ft)									
	4	8	12	14	16	18	20	24	28	32
20	1330	2260	3190	3655	4120	4585	5050	5980	6910	7840
30	2880	4120	5360	5980	6600	7220	7840	9080	10320	11560
40	3500	5050	6600	7375	8150	8925	9700	11250	12800	14350
60	4740	6910	9080	10165	11250	12335	13420	15590	17760	19930
80	5980	8770	15560	12955	14350	15745	17140	19930	22720	25510
100	7220	10630	14040	15745	17450	19155	20860	24270	27680	31090
120	8460	12490	16520	18535	20550	22565	24580	28610	32640	36670

Determine from the data plate and/or labels along the perimeter if the home requires perimeter blocking.

- If perimeter blocking is NOT required, go to **STEP 2. DESIGN FRAME SUPPORTS** (Homes Without Perimeter Blocking), (p. 23).
- If perimeter blocking is required, go to **STEP 3. DESIGN FRAME AND PERIMETER SUPPORTS** (Homes With Perimeter Blocking), (p. 25).

STEP 2. DESIGN FRAME SUPPORTS (Homes Without Perimeter Blocking)

DETERMINE LOCATIONS

All homes require regularly spaced supports along all main frame I-beams. Select spacing between supports and sketch them on the support plan. Keep in mind that frame supports under homes with 8" deep I-beams may be no more than eight feet apart. Those under homes with 10" or 12" deep I-beams may be no more than 10 feet apart. Generally, greater distances between supports will require larger footings. **Figure 8** shows typical frame support locations.

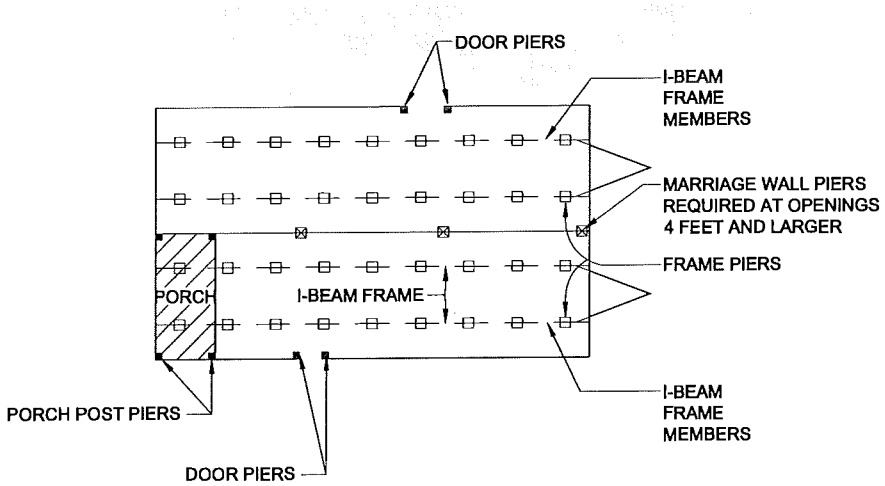

Spacing frame supports. There must be a support pier located near the end of each I-beam such that there is no more than 24 inches as measured from the outside edge of the floor to the center of the pier.

Figure 8. *Typical support locations for homes not requiring regularly spaced perimeter supports*

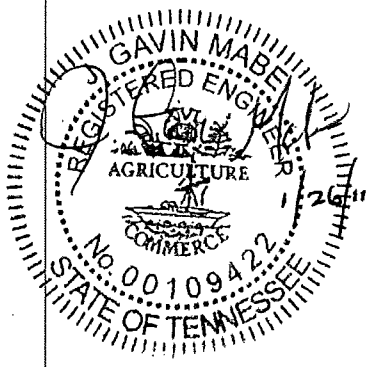

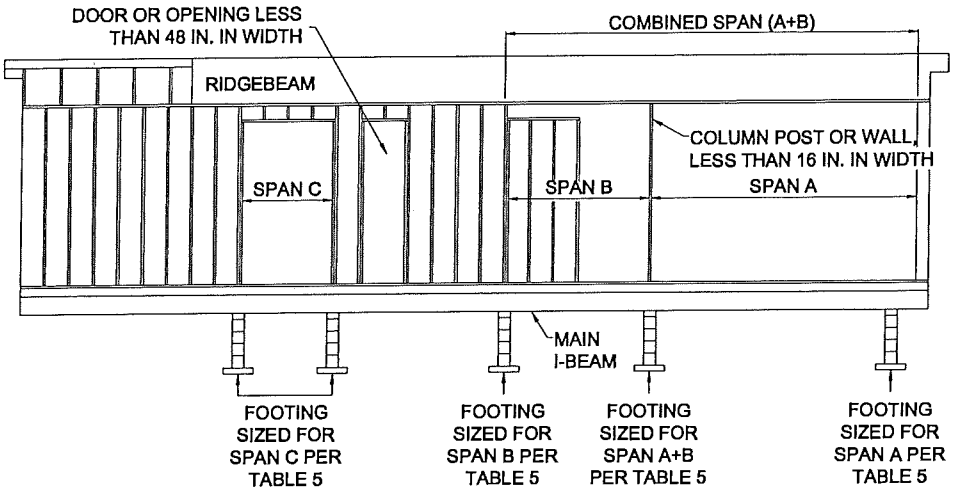

Figure 8A. *Typical marriage line support locations for homes not requiring perimeter supports*

CALCULATE LOADS

Use **Tables 6-6c** to determine the loads on frame supports. Find the chart with the appropriate sidewall eave overhang. Then, find the column with the appropriate roof load zone and section width. Find the row corresponding to the selected support spacing. The number in the intersecting cell is the load.

Loads on all frame supports can be assumed to be equal if support spacing is equal. However, if different support spacings are used then each support with a different spacing should be calculated separately.

Loads for piers installed at 5, 7 and 9 feet on-center can be estimated by adding the loads for the higher and lower spacing and dividing in half (eg. the load for piers installed at 7 feet on-center for a 16 wide with a 1-1/2" overhang in a 20 psf Roof Load Zone would be: 4510 lbs + 5666 lbs = 10176 lbs / 2 = 5088 lbs).

Note the location and load required of each support on the sketch.
(Width listed in each column of the following charts is the overall width of the home. Eg. 16 ft is a single section, 32 ft is a double section and 48 ft is a triple section).

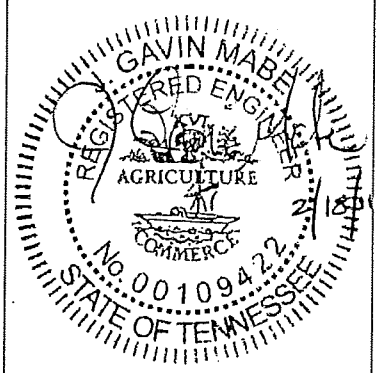

TABLE 6. LOAD ON FRAME PIER FOOTINGS FOR HOMES NOT REQUIRING PERIMETER BLOCKING EXCEPT AT OPENINGS (LBS)

Roof Load Zone and Max. Home Width (1-1/2" Max. Sidewall Eave Overhang)

	South (20 psf)					Middle (30 psf)					North (40 psf)				
Pier Spacing	10 ft	12 ft	14 ft	16 ft	18 ft	10 ft	12 ft	14 ft	16 ft	18 ft	10 ft	12 ft	14 ft	16 ft	18 ft
Up to 4'	2195	2519	2843	3140	3410	2400	2764	3128	3462	3765	2605	3009	3413	3783	4120
> 4' to 6'	3093	3579	4065	4510	4915	3400	3946	4492	4993	5448	3708	4314	4920	5475	5980
> 6' to 8'	3990	4638	5286	5666	6420	4400	5128	5856	6523	7130	4810	5618	6426	7167	7840
> 8' to 10'	4888	5698	6508	7250	7925	5400	6310	7220	8054	8813	5913	6923	7933	8858	9700

TABLE 6a. LOAD ON FRAME PIER FOOTINGS FOR HOMES NOT REQUIRING PERIMETER BLOCKING EXCEPT AT OPENINGS (LBS)

Roof Load Zone and Max. Home Width (6" Max. Sidewall Eave Overhang)

	South (20 psf)					Middle (30 psf)					North (40 psf)				
Pier Spacing	10 ft	12 ft	14 ft	16 ft	18 ft	10 ft	12 ft	14 ft	16 ft	18 ft	10 ft	12 ft	14 ft	16 ft	18 ft
Up to 4'	2240	2564	2888	3185	3455	2460	2824	3188	3522	3825	2680	3084	3488	3858	4195
> 4' to 6'	3160	3646	4132	4578	4983	3490	4036	4582	5083	5538	3820	4426	5032	5588	6093
> 6' to 8'	4080	4728	5376	5750	6510	4520	5248	5976	6643	7250	4960	5768	6576	7317	7990
> 8' to 10'	5000	5810	6620	7363	8038	5550	6460	7370	8204	8963	6100	7110	8120	9046	9888

TABLE 6b. LOAD ON FRAME PIER FOOTINGS FOR HOMES NOT REQUIRING PERIMETER BLOCKING EXCEPT AT OPENINGS (LBS)

Roof Load Zone and Max. Home Width (12" Max. Sidewall Eave Overhang)

	South (20 psf)				Middle (30 psf)				North (40 psf)			
Pier Spacing	10/20 ft	12/24 ft	14/28/42 ft	16/32/48 ft	10/20 ft	12/24 ft	14/28/42 ft	16/32/48 ft	10/20 ft	12/24 ft	14/28/42 ft	16/32/48 ft
Up to 4'	2300	2624	2948	3191	2540	2904	3268	3541	2780	3184	3588	3891
> 4' to 6'	3250	3736	4222	4587	3610	4156	4702	5112	3970	4576	5182	5637
> 6' to 8'	4200	4848	5496	5757	4680	5408	6136	6682	5160	5968	6776	7382
> 8' to 10'	5150	5960	6770	7378	5750	6660	7570	8253	6350	7360	8370	9128

TABLE 6c. LOAD ON FRAME PIER FOOTINGS FOR HOMES NOT REQUIRING PERIMETER BLOCKING EXCEPT AT OPENINGS (LBS)

Roof Load Zone and Max. Home Width (24" Max. Sidewall Eave Overhang)

	South (20 psf)				Middle (30 psf)				North (40 psf)			
Pier Spacing	20 ft	24 ft	28/42 ft	32/48 ft	20 ft	24 ft	28/42 ft	32/48 ft	20 ft	24 ft	28/42 ft	32/48 ft
Up to 4'	2420	2744	3068	3311	2700	3064	3428	3701	2980	3384	3788	4091
> 4' to 6'	3430	3916	4402	4767	3850	4396	4942	5352	4270	4876	5482	5937
> 6' to 8'	4440	5088	5736	6222	5000	5728	6456	7002	5560	6368	7176	7782
> 8' to 10'	5450	6260	7070	7678	6150	7060	7970	8653	6850	7860	8870	9628

Calculate Loads

Use Table 6d to determine the loads on supports below openings in the sidewall when perimeter blocking is not required. Find the row with the appropriate opening span. Then, find the column with the appropriate floor width. The number in the intersecting cell is the load.

TABLE 6d. LOAD ON PIER FOOTINGS AT OPENINGS ALONG THE SIDEWALL (LBS)

Roof Load Zone and Max. Home Width (24" Max. Sidewall Eave Overhang)

	South (20 psf)						South (20 psf)				
Pier Spacing	10/20 ft	12/24 ft	14/28/42 ft	16/32/48 ft	18 ft	Pier Spacing	10/20 ft	12/24 ft	14/28/42 ft	16/32/48 ft	18 ft
Up to 3'	1025	1100	1175	1244	1306	>5' to 6'	1400	1520	1640	1750	1850
> 3' to 4'	1150	1240	1330	1413	1488	>6' to 8'	1650	1800	1950	2088	2213
> 4' to 5'	1275	1380	1485	1581	1669	>8' to 10'	1900	2080	2260	2425	2575
	Middle (30 psf)						Middle (30 psf)				
Pier Spacing	10/20 ft	12/24 ft	14/28/42 ft	16/32/48 ft	18 ft	Pier Spacing	10/20 ft	12/24 ft	14/28/42 ft	16/32/48 ft	18 ft
Up to 3'	1200	1300	1400	1492	1575	>5' to 6'	1680	1840	2000	2147	2280
> 3' to 4'	1360	1480	1600	1710	1810	>6' to 8'	2000	2200	2400	2583	2750
> 4' to 5'	1520	1660	1800	1928	2045	>8' to 10'	2320	2560	2800	3020	3220
	North (40 psf)						North (40 psf)				
Pier Spacing	10/20 ft	12/24 ft	14/28/42 ft	16/32/48 ft	18 ft	Pier Spacing	10/20 ft	12/24 ft	14/28/42 ft	16/32/48 ft	18 ft
Up to 3'	1375	1500	1625	1740	1844	>5' to 6'	1960	2160	2360	2543	2710
> 3' to 4'	1570	1720	1870	2008	2133	>6' to 8'	2350	2600	2850	3079	3288
> 4' to 5'	1765	1940	2115	2275	2421	>8' to 10'	2740	3040	3340	3615	3865

▶ go to **STEP 4. SELECT FOOTING MATERIALS** (p. 30)

STEP 3. DESIGN FRAME AND PERIMETER SUPPORTS. (Homes With Perimeter Blocking)

DETERMINE LOCATIONS

Depending on design and location, some homes require regularly spaced perimeter supports along all of the sidewalls and marriage walls in addition to frame supports. The sidewall and marriage wall supports will be indicated by pier tags, labels, paint or other means. Perimeter blocking requirements may also be noted on the data plate. Perimeter

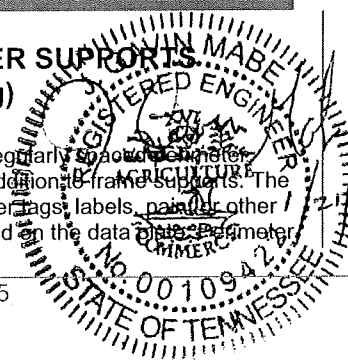

Spacing frame supports. There must be a support

supports must be placed no further than 8 feet on-center.

If required, perimeter supports are only needed on bearing walls. For 20 psf roof live load, perimeter support is only required at exterior doors and other openings 48" and larger, unless noted otherwise. Supports may be added at each corner of each endwall for leveling purposes, but are not required. Bearing walls are those walls that support the ends of roof trusses or rafters (typically sidewalls and marriage walls but not end walls of main units or sidewalls of tag units).

To minimize the number of required perimeter supports, space them evenly between point load supports as shown in **Figure 9** and **Figure 10** (but not under open spans). These figures identify typical support locations for homes requiring perimeter supports.

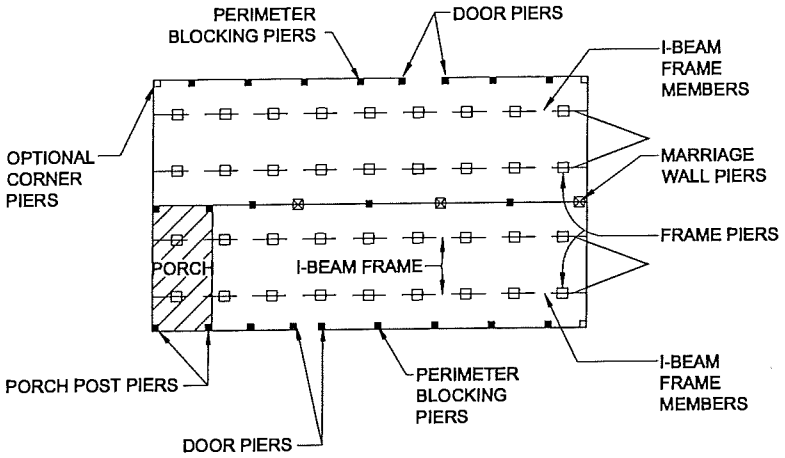

Figure 9. *Typical support locations for homes requiring perimeter supports*

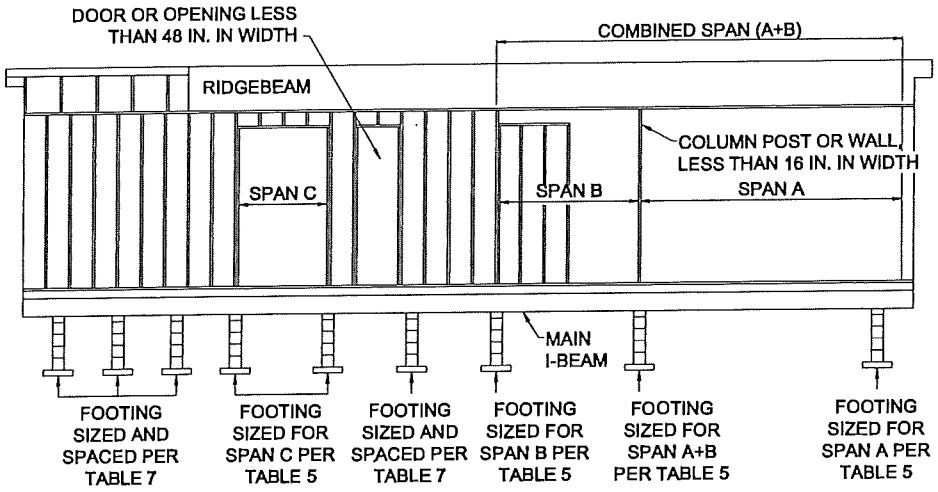

Figure 10. *Typical marriage line support locations for homes requiring perimeter supports*

CALCULATE LOADS

Use **Tables 7-7c** to determine the loads on frame and perimeter supports for homes requiring perimeter blocking. Find the chart with the appropriate sidewall eave overhang. Then, find the column with the appropriate roof load and section width. Find the group of rows corresponding to the selected support spacing. The values in the intersecting cells are the loads for the frame, perimeter and marriage line supports respectively.

Loads on supports of a given type (frame, perimeter or marriage) can be assumed to be equal if support spacing is equal. However, if different support spacings are used then each support with a different spacing should be calculated separately.

Loads for piers installed at 5, 7 and 9 feet on-center can be estimated by adding the loads for the higher and lower spacing and dividing in half (eg. the load for frame piers pier located near the end of each I-beam such that there is no more than 24 inches as measured from the outside edge of the floor to the center of the pier.

A perimeter support must be installed within 4 feet of column supports and the corner of the home when the home is designated for perimeter blocking. The loads listed in Tables 5 for homes greater than 20 psf roof load include the additional 4 foot span.

installed at 7 feet on-center for a 16 wide with a 1-1/2" overhang in a 20 psf Roof Load Zone would be: 2823 lbs + 3630 lbs = 6453 lbs / 2 = 3227 lbs).

Note the location and load required of each support on the sketch.
(Width listed in each column of the following charts is the overall width of the home. Eg. 16 ft is a single section, 32 ft is a double section and 48 ft is a triple section).

TABLE 7. LOAD ON FRAME AND PERIMETER PIER FOOTINGS FOR HOMES REQUIRING PERIMETER BLOCKING (LBS)

Roof Load Zone and Max. Home Width (1-1/2" Max. Sidewall Eave Overhang)

Pier		South (20 psf)					Middle (30 psf)					North (40 psf)					North (60 psf)				
Spacing	Location	10 ft	12 ft	14 ft	16 ft	18 ft	10 ft	12 ft	14 ft	16 ft	18 ft	10 ft	12 ft	14 ft	16 ft	18 ft	10 ft	12 ft	14 ft	16 ft	18 ft
Up to 4'	Frame	1420	1624	1828	2015	2185	1420	1624	1828	2015	2185	1420	1624	1828	2015	2185	1420	1624	1828	2015	2185
Up to 4'	Sidewall	1175	1295	1415	1525	1625	1380	1540	1700	1847	1980	1585	1785	1985	2168	2335	1995	2275	2555	2812	3045
> 4' to 6'	Frame	1930	2236	2542	2823	3078	1930	2236	2542	2823	3078	1930	2236	2542	2823	3078	1930	2236	2542	2823	3078
> 4' to 6'	Sidewall	1563	1743	1923	2088	2238	1870	2110	2350	2570	2770	2178	2478	2778	3053	3303	2793	3213	3633	4018	4368
> 6' to 8'	Frame	2440	2848	3256	3630	3970	2440	2848	3256	3630	3970	2440	2848	3256	3630	3970	2440	2848	3256	3630	3970
> 6' to 8'	Sidewall	1950	2190	2430	2650	2850	2360	2680	3000	3293	3560	2770	3170	3570	3937	4270	3590	4150	4710	5223	5690
> 8' to 10'	Frame	2950	3460	3970	4438	4863	2950	3460	3970	4438	4863	2950	3460	3970	4438	4863	2950	3460	3970	4438	4863

Pier		North (80 psf)					North (100 psf)					North (120 psf)				
Spacing	Location	10 ft	12 ft	14 ft	16 ft	18 ft	10 ft	12 ft	14 ft	16 ft	18 ft	10 ft	12 ft	14 ft	16 ft	18 ft
Up to 4'	Frame	1420	1624	1828	2015	2185	1420	1624	1828	2015	2185	1420	1624	1828	2015	2185
Up to 4'	Sidewall	2405	2765	3125	3455	3755	2815	3255	3695	4098	4465	3225	3745	4265	4742	5175
> 4' to 6'	Frame	1930	2236	2542	2823	3078	1930	2236	2542	2823	3078	1930	2236	2542	2823	3078
> 4' to 6'	Sidewall	3408	3948	4488	4983	5433	4023	4683	5343	5948	6498	4638	5418	6198	6913	7563
> 6' to 8'	Frame	2440	2848	3256	3630	3970	2440	2848	3256	3630	3970	2440	2848	3256	3630	3970
> 6' to 8'	Sidewall	4410	5130	5850	6510	7110	5230	6110	6990	7797	8530	6050	7090	8130	9083	9950
> 8' to 10'	Frame	2950	3460	3970	4438	4863	2950	3460	3970	4438	4863	2950	3460	3970	4438	4863

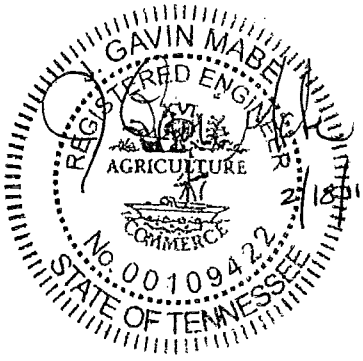

Install Footings

TABLE 7a. LOAD ON FRAME AND PERIMETER PIER FOOTINGS FOR HOMES REQUIRING PERIMETER BLOCKING (LBS)

Roof Load Zone and Max. Home Width (6" Max. Sidewall Eave Overhang)

Pier Spacing	Location	South (20 psf)					Middle (30 psf)					North (40 psf)					North (60 psf)				
		10 ft	12 ft	14 ft	16 ft	18 ft	10 ft	12 ft	14 ft	16 ft	18 ft	10 ft	12 ft	14 ft	16 ft	18 ft	10 ft	12 ft	14 ft	16 ft	18 ft
Up to 4'	Frame	1420	1624	1828	2015	2185	1420	1624	1828	2015	2185	1420	1624	1828	2015	2185	1420	1624	1828	2015	2185
Up to 4'	Sidewall	1220	1340	1460	1570	1670	1440	1600	1760	1907	2040	1660	1860	2060	2243	2410	2100	2380	2660	2917	3150
> 4' to 6'	Frame	1930	2236	2542	2823	3078	1930	2236	2542	2823	3078	1930	2236	2542	2823	3078	1930	2236	2542	2823	3078
> 4' to 6'	Sidewall	1630	1810	1990	2155	2305	1960	2200	2440	2660	2860	2290	2590	2890	3165	3415	2950	3370	3790	4175	4525
> 6' to 8'	Frame	2440	2848	3256	3630	3970	2440	2848	3256	3630	3970	2440	2848	3256	3630	3970	2440	2848	3256	3630	3970
> 6' to 8'	Sidewall	2040	2280	2520	2740	2940	2480	2800	3120	3413	3680	2920	3320	3720	4087	4420	3800	4360	4920	5433	5900
> 8' to 10'	Frame	2950	3460	3970	4438	4863	2950	3460	3970	4438	4863	2950	3460	3970	4438	4863	2950	3460	3970	4438	4863

Pier Spacing	Location	North (80 psf)					North (100 psf)					North (120 psf)				
		10 ft	12 ft	14 ft	16 ft	18 ft	10 ft	12 ft	14 ft	16 ft	18 ft	10 ft	12 ft	14 ft	16 ft	18 ft
Up to 4'	Frame	1420	1624	1828	2015	2185	1420	1624	1828	2015	2185	1420	1624	1828	2015	2185
Up to 4'	Sidewall	2540	2900	3260	3590	3890	2980	3420	3860	4263	4630	3420	3940	4460	4937	5370
> 4' to 6'	Frame	1930	2236	2542	2823	3078	1930	2236	2542	2823	3078	1930	2236	2542	2823	3078
> 4' to 6'	Sidewall	3610	4150	4690	5185	5635	4270	4930	5590	6195	6745	4930	5710	6490	7205	7855
> 6' to 8'	Frame	2440	2848	3256	3630	3970	2440	2848	3256	3630	3970	2440	2848	3256	3630	3970
> 6' to 8'	Sidewall	4680	5400	6120	6780	7380	5560	6440	7320	8127	8860	6440	7480	8520	9473	10340
> 8' to 10'	Frame	2950	3460	3970	4438	4863	2950	3460	3970	4438	4863	2950	3460	3970	4438	4863

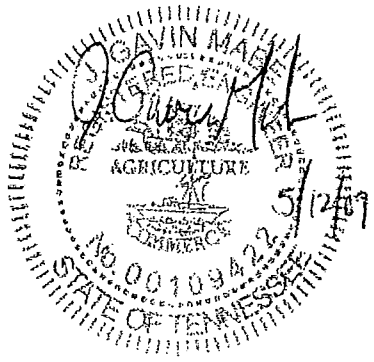

TABLE 7b. LOAD ON FRAME AND PERIMETER PIER FOOTINGS FOR HOMES REQUIRING PERIMETER BLOCKING (LBS)

Roof Load Zone and Max. Home Width (12" Max. Sidewall Eave Overhang)

Pier		South (20 psf)				Middle (30 psf)				North (40 psf)				North (60 psf)			
Spacing	Location	20 ft	24/36 ft	28/42 ft	32/48 ft	20 ft	24/36 ft	28/42 ft	32/48 ft	20 ft	24/36 ft	28/42 ft	32/48 ft	20 ft	24/36 ft	28/42 ft	32/48 ft
Up to 4'	Frame	1420	1624	1828	1981	1420	1624	1828	1981	1420	1624	1828	1981	1420	1624	1828	1981
Up to 4'	Sidewall	1280	1400	1520	1610	1520	1680	1840	1960	1760	1960	2160	2310	2240	2520	2800	3010
Up to 4'	Marriagewall	1760	2000	2240	2420	2160	2480	2800	3040	2560	2960	3360	3660	3360	3920	4480	4900
> 4' to 6'	Frame	1930	2236	2542	2772	1930	2236	2542	2772	1930	2236	2542	2772	1930	2236	2542	2772
> 4' to 6'	Sidewall	1720	1900	2080	2215	2080	2320	2560	2740	2440	2740	3040	3265	3160	3580	4000	4315
> 4' to 6'	Marriagewall	2440	2800	3160	3430	3040	3520	4000	4360	3640	4240	4840	5290	4840	5680	6520	7150
> 6' to 8'	Frame	2440	2848	3256	3562	2440	2848	3256	3562	2440	2848	3256	3562	2440	2848	3256	3562
> 6' to 8'	Sidewall	2160	2400	2640	2820	2640	2960	3280	3520	3120	3520	3920	4220	4080	4640	5200	5620
> 6' to 8'	Marriagewall	3120	3600	4080	4440	3920	4560	5200	5680	4720	5520	6320	6920	6320	7440	8560	9400
> 8' to 10'	Frame	2950	3460	3970	4353	2950	3460	3970	4353	2950	3460	3970	4353	2950	3460	3970	4353

Pier		North (80 psf)				North (100 psf)				North (120 psf)			
Spacing	Location	20 ft	24 ft	28/42 ft	32/48 ft	20 ft	24 ft	28/42 ft	32/48 ft	20 ft	24 ft	28/42 ft	32/48 ft
Up to 4'	Frame	1420	1624	1828	1981	1420	1624	1828	1981	1420	1624	1828	1981
Up to 4'	Sidewall	2720	3080	3440	3710	3200	3640	4080	4410	3680	4200	4720	5110
Up to 4'	Marriagewall	4160	4880	5600	6140	4960	5840	6720	7380	5760	6800	7840	8620
> 4' to 6'	Frame	1930	2236	2542	2772	1930	2236	2542	2772	1930	2236	2542	2772
> 4' to 6'	Sidewall	3880	4420	4960	5365	4600	5260	5920	6415	5320	6100	6880	7465
> 4' to 6'	Marriagewall	6040	7120	8200	9010	7240	8560	9880	10870	8440	10000	11560	12730
> 6' to 8'	Frame	2440	2848	3256	3562	2440	2848	3256	3562	2440	2848	3256	3562
> 6' to 8'	Sidewall	5040	5760	6480	7020	6000	6880	7760	8420	6960	8000	9040	9820
> 6' to 8'	Marriagewall	7920	9360	10800	11880	9520	11280	13040	14360	11120	13200	15280	16840
> 8' to 10'	Frame	2950	3460	3970	4353	2950	3460	3970	4353	2950	3460	3970	4353

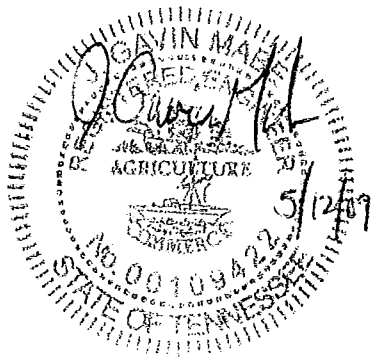

TABLE 7c. LOAD ON FRAME AND PERIMTER PIER FOOTINGS FOR HOMES REQUIRING PERIMETER BLOCKING (LBS)

Roof Load Zone and Max. Home Width (24" Max. Sidewall Eave Overhang)

Pier		South (20 psf)				Middle (30 psf)				North (40 psf)				North (60 psf)			
Spacing	Location	20 ft	24/36 ft	28/42 ft	32/48 ft	20 ft	24/36 ft	28/42 ft	32/48 ft	20 ft	24/36 ft	28/42 ft	32/48 ft	20 ft	24/36 ft	28/42 ft	32/48 ft
Up to 4'	Frame	1420	1624	1828	1981	1420	1624	1828	1981	1420	1624	1828	1981	1420	1624	1828	1981
Up to 4'	Sidewall	1400	1520	1640	1730	1680	1840	2000	2120	1960	2160	2360	2510	2520	2800	3080	3290
Up to 4'	Marriagewall	1760	2000	2240	2420	2160	2480	2800	3040	2560	2960	3360	3660	3360	3920	4480	4900
> 4' to 6'	Frame	1930	2236	2542	2772	1930	2236	2542	2772	1930	2236	2542	2772	1930	2236	2542	2772
> 4' to 6'	Sidewall	1900	2080	2260	2395	2320	2560	2800	2980	2740	3040	3340	3565	3580	4000	4420	4735
> 4' to 6'	Marriagewall	2440	2800	3160	3430	3040	3520	4000	4360	3640	4240	4840	5290	4840	5680	6520	7150
> 6' to 8'	Frame	2440	2848	3256	3562	2440	2848	3256	3562	2440	2848	3256	3562	2440	2848	3256	3562
> 6' to 8'	Sidewall	2400	2640	2880	3060	2960	3280	3600	3840	3520	3920	4320	4620	4640	5200	5760	6180
> 6' to 8'	Marriagewall	3120	3600	4080	4440	3920	4560	5200	5680	4720	5520	6320	6920	6320	7440	8560	9400
> 8' to 10'	Frame	2950	3460	3970	4353	2950	3460	3970	4353	2950	3460	3970	4353	2950	3460	3970	4353

Pier		North (80 psf)				North (100 psf)				North (120 psf)			
Spacing	Location	20 ft	24 ft	28/42 ft	32/48 ft	20 ft	24 ft	28/42 ft	32/48 ft	20 ft	24 ft	28/42 ft	32/48 ft
Up to 4'	Frame	1420	1624	1828	1981	1420	1624	1828	1981	1420	1624	1828	1981
Up to 4'	Sidewall	3080	3440	3800	4070	3640	4080	4520	4850	4200	4720	5240	5630
Up to 4'	Marriagewall	4160	4880	5600	6140	4960	5840	6720	7380	5760	6800	7840	8620
> 4' to 6'	Frame	1930	2236	2542	2772	1930	2236	2542	2772	1930	2236	2542	2772
> 4' to 6'	Sidewall	4420	4960	5500	5905	5260	5920	6580	7075	6100	6880	7660	8245
> 4' to 6'	Marriagewall	6040	7120	8200	9010	7240	8560	9880	10870	8440	10000	11560	12730
> 6' to 8'	Frame	2440	2848	3256	3562	2440	2848	3256	3562	2440	2848	3256	3562
> 6' to 8'	Sidewall	5760	6480	7200	7740	6880	7760	8640	9300	8000	9040	10080	10860
> 6' to 8'	Marriagewall	7920	9360	10800	11880	9520	11280	13040	14360	11120	13200	15280	16840
> 8' to 10'	Frame	2950	3460	3970	4353	2950	3460	3970	4353	2950	3460	3970	4353

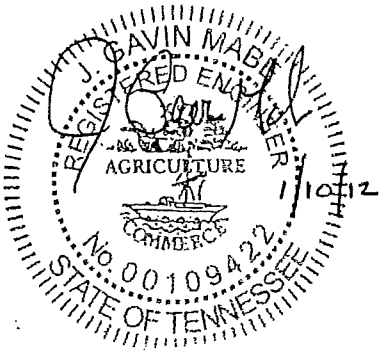

STEP 4. SELECT FOOTING MATERIAL

Select one of the products and materials from **Table 8** for the footings.

TABLE 8. FOOTING MATERIALS

Material	Appropriate Use	Specification
Poured concrete	All soil types	Minimum 6" thick poured-in-place concrete pads, slabs, or ribbons with at least a 28 day compressive strength of 3,000 psi. Cast-in-place concrete footings may also require reinforcing steel based on acceptable engineering practice, the design loads, and site specific soil conditions.
Pre-cast concrete	All soil types	Minimum 4" thick nominal precast concrete pads meeting or exceeding ASTM C 90-02a, Standard Specification for Load Bearing Concrete Masonry Units, without reinforcement, with at least a 28 day compressive strength of 1,200 psi
ABS plastic	Stable soils	Use in accordance with the pad manufacturer's instructions. Must be certified for use in the soil classification at the site, listed or labeled for the required load capacity.
Proprietary systems	Consult system manufacturer	Consult system manufacturer

Will footings be concrete?

- ▶ **YES**, go to **STEP 5. SIZE FOOTING**, (p. 31).
- ▶ **NO**, see footing system manufacturer's instructions, then go to **Set the Home** (p. 38).

STEP 5. SIZE FOOTINGS

Once the load on the footing and the soil bearing capacity are known, calculate the size of each footing as follows:

1. From **Table 9** determine if the pier is to be of single stack blocks (8 inch x16 inch) or double stack blocks (16 inch x 16 inch).
2. Locate the group of columns in **Table 10** with the soil bearing capacity determined in **Prepare the Site, STEP 5. DETERMINE SOIL BEARING CAPACITY AND FROST LINE** (p. 17). Use the next lowest value if the exact value does not appear.
3. Find the row corresponding to the pier capacity required by Tables 5, 6 or 7. Then, read across the table to determine the minimum required footing area for the corresponding pier capacity and soil bearing capacity.
4. The required footing size and pier capacity may be changed by selecting different support spacing.

TABLE 9. PIER CONFIGURATION

Pier Configuration	Height	Configuration	Maximum load (lbs)	
			Without Mortar	With Mortar
Single Stack	Less than 36 in *	Single stack blocks with long side perpendicular to frame I-beam or parallel to perimeter rail (rim joist)	5,760	7,680
Double Stack	67" Max.	Double, interlocked blocks	11,520	15,360
Triple Stack	67" Max.	Triple, interlocked blocks	17,280	23,034
Double Reinforced	108" Max. **	Double, interlocked blocks	NA	39,500

* Single stack piers may be constructed up to 54" max. height only when installed as perimeter and marriage line support piers.

** Cross reference maximum allowable pier height with maximum floor height listed in frame tiedown charts. If maximum height listed in frame tiedown charts is exceeded then designs must be provided by a registered professional engineer or registered architect.

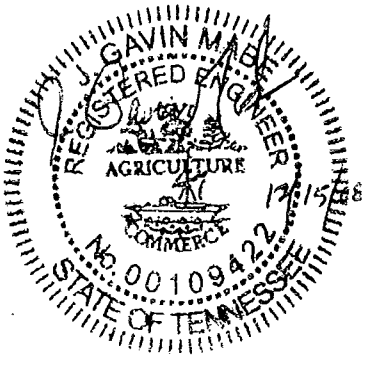

Install Footings

TABLE 10. FOOTING DIMENSIONS

Pier Capacity (Lbs)	Soil Bearing Capacity (PSF) Required Footing Area (square inches)					
	1000	1500	2000	2500	3000	4000
1000	144	128	128	128	128	128
1200	173	128	128	128	128	128
1400	202	134	128	128	128	128
1600	230	154	128	128	128	128
1800	259	173	130	128	128	128
2000	288	192	144	128	128	128
2200	317	211	158	128	128	128
2400	346	230	173	138	128	128
2600	374	250	187	150	128	128
2800	403	269	202	161	134	128
3000	432	288	216	173	144	128
3100	446	298	223	179	149	128
3200	461	307	230	184	154	128
3300	475	317	238	190	158	128
3400	490	326	245	196	163	128
3500	504	336	252	202	168	128
3600	518	346	259	207	173	130
3700	533	355	266	213	178	133
3800	547	365	274	219	182	137
3900	562	374	281	225	187	140
4000	576	384	288	230	192	144
4100	590	394	295	236	197	148
4200	605	403	302	242	202	151
4300	619	413	310	248	206	155
4400	634	422	317	253	211	158
4500	648	432	324	259	216	162
4600	662	442	331	265	221	166
4700	677	451	338	271	226	169
4800	691	461	346	276	230	173
4900	706	470	353	282	235	176
5000	720	480	360	288	240	180
5200	749	499	374	300	250	187
5400	778	518	389	311	259	194
5600	806	538	403	323	269	202
5800	835	557	418	334	278	209
6000	864	576	432	346	288	216
6200	893	595	446	357	298	223
6400	922	614	461	369	307	230
6600	950	634	475	380	317	238
6800	979	653	490	392	326	245
7000	1008	672	504	403	336	252
7200	1037	691	518	415	346	259
7400	1066	710	533	426	355	266
7600	1094	730	547	438	365	274
7800	1123	749	562	449	374	281
8000	1152	768	576	461	384	288
8500	1224	816	612	490	408	306
9000	1296	864	648	518	432	324
9500	1368	912	684	547	456	342
10000	1440	960	720	576	480	360
10500	1512	1008	756	605	504	378
11000	1584	1056	792	634	528	396
11500	1656	1104	828	662	552	414
12000	1728	1152	864	691	576	432
12500	1800	1200	900	720	600	450
13000	1872	1248	936	749	624	468
13500	1944	1296	972	778	648	486
14000	2016	1344	1008	806	672	504
14500	2088	1392	1044	835	696	522
15000	2160	1440	1080	864	720	540
15500	2232	1488	1116	893	744	558
16000	2304	1536	1152	922	768	576

Note:

To calculate a square or rectangular footer:

Length (in) x Width (in) = Area

Example:

16 in x 20 in = 320 sq. inches

To calculate a round footer:

3.14 x .25 x Diameter (in) x Diameter (in) = Area

Example: For a 22" diameter footing

3.14 x .25 x 22 in x 22 in = 380 sq. inches

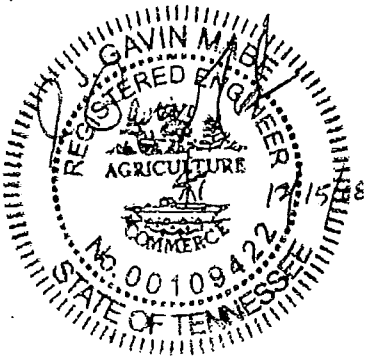

Design footings to comply with the following additional requirements:

- To keep footings directly under I-beams and other support points, size them slightly larger than the minimum required area to allow slight adjustment of the pier location during home installation.
- Design footings with a footing extension (projection beyond the base of the pier) no greater than the footing thickness (**Figure 11**). Increase footing thickness if necessary.

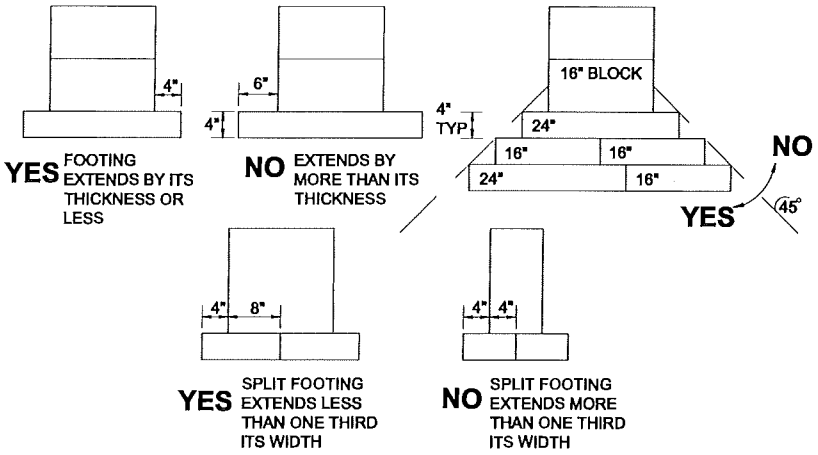

Figure 11. *Maximum footing extensions*

- The footing sizes shown are for square pads and are based on the surface area (square inches). Design non-square footings such that the area and depth is equal to or greater than the area of the square footing shown in **Table 10** and the distance from the edge of the pier to the edge of the footing is not more than the thickness of the footing.

TABLE 10A. FOOTER DEPTH

Poured in Place Footing for Single Stack Pier			Poured in Place Footing for Double Stack Pier		
Footer Depth (in)	Max Footer Dimension (in x in)	Max. Area (sq. in)	Footer Depth (in)	Max Footer Dimension (in x in)	Max. Area (sq. in)
6	28 x 20	560	6	28 x 28	784
8	32 x 24	768	8	32 x 32	1024
10	36 x 28	1008	10	36 x 36	1296
12	40 x 32	1280	12	40 x 40	1600
			14	44 x 44	1936
			16	48 x 48	2304

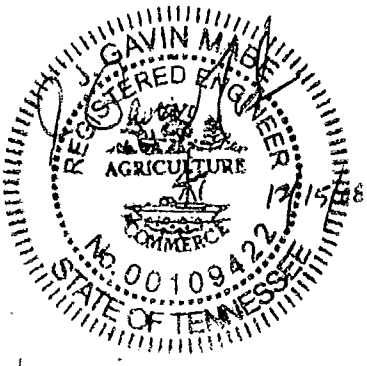

STEP 6. INSTALL FOOTINGS

Construct the footings as follows:

- Maintain the distance between adjacent piers to within 10% of the tabulated spacing and so the average distance between piers is equal to or less than the tabulated spacing.
- Whenever possible, place pier supports directly under the required locations. If plumbing, electrical or mechanical equipment interferes, place supports no more than 6 inches in either direction of the support point.
- Recess perimeter pier supports no more than 10 inches from the edge of the floor with added support as shown in **Figure 12**.

Placing Concrete anchors. If anchors will be placed in concrete follow instructions in **Install Stabilizing System** (p. 74) to determine anchor layout. Either place anchors immediately after the concrete has been poured or drill them in after the concrete has set.

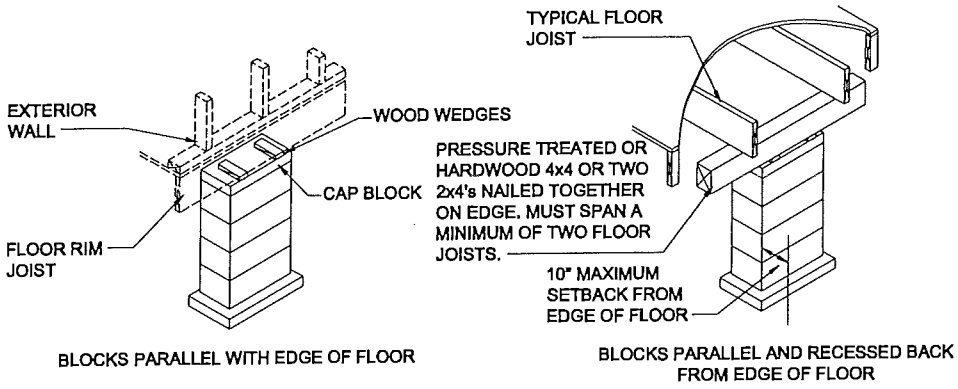

Figure 12. *Perimeter supports*

- If footings are rectangular, orient them so that the long side is perpendicular to the home's I-beam.
- Place the bottom of footings on undisturbed soil or fill compacted to at least 90% of its maximum relative density.
- In freezing climates protect footings from the effects of frost heave in accordance with any LAHJ requirements (see **Prepare the Site**, p. 15). Place the bottom of the footings below the frost line (insulated foundations and monolithic slabs or other frost protection options are acceptable, but not covered in this manual).
- Make sure the top surface of the footing is level, flat and smooth.
- In accordance with the American Concrete Institute publication ACI-308, maintain curing measures before construction or installation onto the concrete footing begins.

Excavation. If excavation is required, mark the footing locations on the ground with stakes before beginning to dig.

▶ go to **Set the Home** (p. 38)

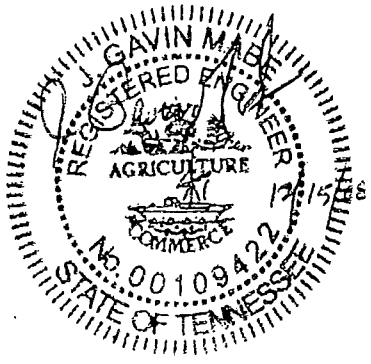

Construct Foundation

(FOR HOMES WITH LOAD BEARING PERIMETER WALL)

This chapter provides guidelines and recommendations for the design and construction of a basement or crawlspace foundation using a load bearing perimeter wall. A load bearing perimeter wall foundation system uses a wall along the outer edge of the home to support the home's outside walls. This perimeter support works with interior supports such as piers, columns and cross beams that support the home's frame and, if multi-section, marriage line.

Follow the Steps below:

- **STEP 1. OBTAIN A FOUNDATION DESIGN** (p. 35)
- **STEP 2. EXCAVATE** (p. 35)
- **STEP 3. CONSTRUCT THE FOOTING OR SLAB** (p. 35)
- **STEP 4. CONSTRUCT THE PERIMETER WALL** (p. 35)
- **STEP 5. INSTALL INTERIOR SUPPORTS** (p. 37)
- **STEP 6. WATERPROOF FOUNDATION WALL** (p. 37)
- **STEP 7. BACKFILL AND GRADE** (p. 37)

STEP 1. OBTAIN A FOUNDATION DESIGN

If a load bearing perimeter wall foundation design has not been provided by the home manufacturer, it is the responsibility of the retailer and/or home owner to provide a design approved by an engineer or architect, licensed in the state where the home will be installed. The approved design must comply with the LAHJ regulations for foundation design, waterproofing and drainage, and the following:

- The foundation perimeter bearing wall must be supported with a concrete slab or continuous strip footing around the perimeter of the home. Interior piers must be supported by a slab or footings. If footings are used under interior piers, they may be designed as in **Design Frame and Perimeter Supports**, p. 25.
- Slabs must extend to the edges of the home. **IMPORTANT: Verify the dimensions of the actual floor width (eg. a 28' wide home does not measure 28 feet in width).**
- Footings and slabs must be protected from the effects of frost heave by extending the footings to or below the frost line or by using a frost protected shallow foundation design.

STEP 2. EXCAVATE

Excavate for the foundation, properly disposing of the earth that is not needed for backfill or site grading purposes.

STEP 3. CONSTRUCT THE FOOTINGS OR SLAB

Construct the foundation according to the approved design, including the perimeter foundation wall, drainage system, footing(s) and/or slab.

STEP 4. CONSTRUCT THE PERIMETER WALL

Unless the approved design requires otherwise, construct the perimeter wall with mortared and reinforced concrete blocks or reinforced poured-in-place concrete. Install reinforcement according to the approved design or LAHJ. Install ventilation and access openings according to the approved design, or if not specified, according to the requirements in **Complete Under the Home, STEP 3 INSTALL SKIRTING** (p. 113).

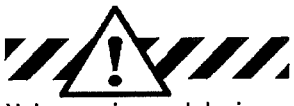

Using engineered designs. This section is NOT intended to provide a complete design for a buildable foundation. A complete design must be obtained that is suitable for the local area and sealed by a professional engineer or registered architect, licensed in the state. Alternate foundation designs must be approved by the manufacturer and DAPIA. The Alternate Foundation Approval form (**Appendix A**) must be completed and submitted with the proposed foundation design. The manufacturer is capable of providing limited model specific foundation designs upon request.

Foundation ready home. Make sure that homes to be installed on a basement or a crawlspace have been ordered with a recessed frame or as a basement-ready frame system, where the frame is designed to avoid

Where open slatted deck boards are used at recessed entries and porches, provisions must be made to ensure water is not permitted to drain into the area under the conditioned portion of the home. Any perimeter type skirting or foundation wall should be installed to follow the exterior of the wall of the home and permit the area beneath the porch to drain water away from the home.

When constructing pockets for a cross beam system, measure the beam depth and locate the pockets carefully. It is critical that the home's frame rests on top of the cross beam and the perimeter of the floor rests squarely on the foundation wall sill plate (**Figure 13**). Leave room for a two-inch nominal, hardwood spacer on top of the wall pockets (to prevent corrosion, the steel beams must not be in direct contact with concrete). Leave at least one inch for thermal expansion at the ends of the beams and maintain a minimum of two inches of bearing area for the beams in the pockets (yielding a minimum pocket depth of three inches).

Bolt a pressure treated wood sill plate (minimum 2 x 6) to the top of the foundation wall. If the home's siding cannot be nailed through, use a 2 x 10 sill plate that extends into the foundation 1-1/4 inches (**Figure 14**). The home can then be connected to the foundation by fastening the sill plate into the floor joists from below. Connect the home to the foundation according to the approved design (See Step 1).

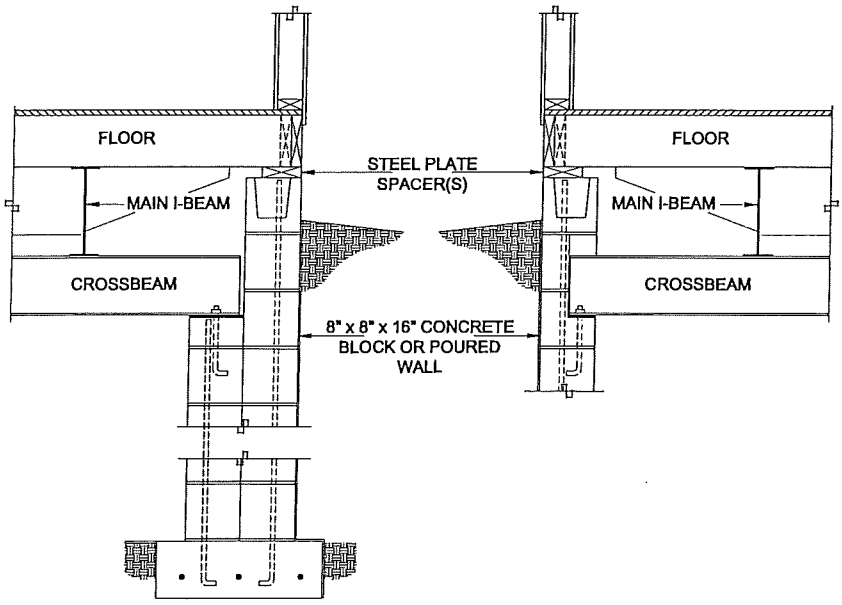

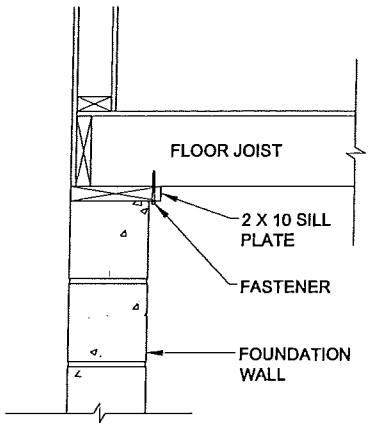

interference with the foundation wall.

Checking the water table. For basements, check for a high water table. The water table may vary seasonally or based on weather conditions. A geologist can perform an algae test to determine the water table level. The foundation design must account for a high water table.

Level the wall. Make sure the foundation is level and straight with no more than a 1/4 inch vertical variation over the entire foundation and no more than 1/8 inch vertical variation over any two-foot length.

Check for Plates. When using a cross beam system, check and compensate for reinforcement plates that add thickness to the chassis beam at axle locations.

Figure 13. *Cross beam installation*

Figure 14. *Connection using 2 x 10 sill plate*

STEP 5. INSTALL INTERIOR SUPPORTS

Install piers, columns and cross beams to support the interior of the home according to the approved design.

STEP 6. DAMP PROOF FOUNDATION WALL

Damp or water proof foundation walls as necessary according to local jurisdiction requirements.

Is this a basement foundation?

- ▶ YES, go to **Set the Home**, (p. 38).
- ▶ NO, go to **STEP 7. BACKFILL AND GRADE**, (p. 37).

STEP 7. BACKFILL AND GRADE

Backfill against the foundation wall to the height of the damp proofing.Take care to not damage the drainage system. Grade the fill as per **Prepare the Site** (p. 15).

Does the approved foundation design call for ground anchors?

- ▶ YES, go to **Install Stabilizing Systems**, (p. 74).
- ▶ NO, go to **Set the Home**, (p. 38).

Footing heights. Pour footings to a height that will reduce the need to cut blocks or shim when building perimeter walls and piers.

Backfilling. Backfill against basement walls only after the home is connected to the foundation or the basement walls may deflect inward or collapse.

Set the Home

This chapter describes the process of installing the first section of the home (for single section homes this is the only section) onto the foundation.

Follow the Steps below:

- STEP 1. PREPARE FOR SET (p. 38)
- STEP 2. POSITION HOME SECTION (p. 38)
- STEP 3. LIFT HOME (p. 38)
- STEP 4. CONSTRUCT PIERS (p. 40)

STEP 1. PREPARE FOR SET

Before beginning the home set, complete the following:

- Confirm that the site is properly cleared and graded (see **Prepare the Site**, p. 15.
- Ensure that the footings are in place and properly located.
- Install any utilities that will be difficult to install (e.g. those below grade beneath the home) after the home is in place.
- Secure or remove from the home and properly store all ship loose items (refer to shipping documents for items shipped with the home).
- Inspect the home interior, exterior and all provided materials, appliances and equipment. Immediately report any damage or shortages to the manufacturer.

For perimeter bearing wall foundations:

- Check that the actual length and width of the home matches the foundation walls.
- Check that the two main diagonal measurements of the foundation are equal.
- Check that the foundation walls and other support points are within 1/4 inch of level overall and within 1/8 inch of level within any four foot distance.
- For multi-section homes, check that each pair of diagonal measurements for each portion of the foundation corresponding to a home section are equal.
- For multi-section homes, find the electrical bonding lugs on the front **or** rear outriggers. Reverse them to the inside of the outrigger so they will be accessible after the home is placed on the foundation walls.
- If using a cross beam system, remove the frame's shackle hanger if it will interfere with proper placement of the beam.

STEP 2. POSITION HOME SECTION

Position the home section in its final location (if possible, move the heaviest section of the home into place first). Then place materials needed to construct support piers near their final locations under the home as determined in **Install Footings,** (p. 20).

STEP 3. LIFT HOME

There are three primary methods available to place the home on the foundation: jacking, rolling and craning. Jacks, often with roller systems, are typically used for pier and anchor foundations; roller systems are commonly used for crawlspace foundations with load bearing perimeter walls; and cranes are most commonly used for basement foundations.

JACKS

If jacks are to be used, comply with all jacking safety precautions and the procedure below. Lifting the home with jacks involves potential risks and must be done with ut-

Clearances under the home. After the home is leveled, the resulting distance between the bottom of the entire chassis main frame beam and the ground must be no less than 12 inches.

Utilize proper cribbing. Homes weigh several tons. No one should be under the home (whether it is moving or stationary) unless proper cribbing is in place (**Figure 15**). Failure to utilize proper cribbing may result in serious injury or death.

Leveling During Jacking. Keep the home's floor as level as possible during jacking. Twisting or warping the floor can damage the structure and finishing. Use as many jacks as necessary to keep the floor flat and level.

most care and caution. Failure to follow jacking warnings and procedures may result in serious injury or death. Please read the Jacking Safety Precautions before lifting the home with jacks.

JACKING SAFETY PRECAUTIONS

- No one should be under the home's I-beams while the jacks are being operated or while the home is supported only on the jacks.
- Use jacks only for raising the home. Do not rely on the jacks to support the home.
- If possible, raise the home only on one side so that the other side is in contact with the ground. Leave the hitch connected to the vehicle or other stabilizing equipment.
- Obey all OSHA regulations.
- Make sure adequate safety cribbing (**Figure 15**) is in place whenever the home is placed on jacks.
- Use a minimum of two commercial quality jacks, each with a rating of at least 12 tons.
- Jack only on the main chassis I-beam, centering jacks directly under the beam.
- Do not jack on a seam (joint between flanges of twin I-beams).
- To distribute the concentrated loads from jacks to I-beam, place a minimum 3/8-inch thick steel plate, a C-channel, a 1½-inch thick hardwood block or a commercial jacking plate, between the main chassis I-beam and the jack head.
- Locate the jack base on firm ground. Never jack on freshly disturbed soil or where an underground sewer pipe may be located.
- Use a firm support under the jack base to prevent tipping or settling of the jack. A minimum 16" x 16" or larger wood or rigid fiberglass pad is recommended. Never use concrete blocks as a support for a jack.
- Never use jacks that are leaking or are in need of repair.

Follow the jacking sequence outlined below to avoid overstressing structural members:

1. **Block wheels.** Block the wheels so the house does not roll.
2. **Install cribbing.** Install safety cribbing (**Figure 15**)

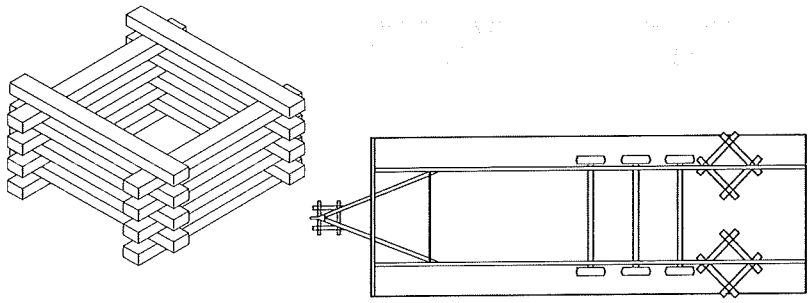

Figure 15. *Stack 4" x 6" by 5' long timbers as shown to form safety timbers. Place safety timbers under home behind axle area and under hitch.*

3. **Level lengthwise.** Locate one jack at the hitch and level the section lengthwise (such that the front and rear of the section are at the same height).
4. **Locate frame jacks.** Place a minimum of one jack in front of the first spring hanger and another just behind the last spring hanger of the I-beam on the side of the home that is lowest (making sure not to place jacks where the piers will go). Place jacks no more than 20 feet apart and no more than 20 feet from each end of the I-beam.
5. **Lift the home.** Operating the jacks simultaneously (or sequentially in very small increments), lift the home section until it is slightly higher than the final desired pier height.

ROLLER SYSTEMS

When using a roller system, comply with the equipment manufacturer's directions and the following sequence:

1. **Establish staging area.** Establish a staging area directly adjacent to one or both sides of the foundation.
2. **Setup rollers.** Set up the roller system according to the equipment manufacturer's directions.
3. **Fasten bump blocks.** Temporarily fasten wooden bump blocks on the sill plates at the ends of the foundation to stop the home from rolling at the desired location.
4. **Roll home.** Roll the home into place over the foundation.
5. **Remove bump blocks.** Remove the blocks before installing the next section of a multi-section home.

No one should be under the home while it is suspended. Never put your hands between the home and the perimeter walls.

CRANES

When using a crane, follow these guidelines:

- Position the home section(s) and crane (taking the boom reach into consideration) such that they do not have to be repositioned during the set.
- Use enough properly sized straps to maintain balance of the home and to prevent damage to the structure.
- Place straps under walls or posts, including temporary posts used to support the opening. Do not position lifting straps under marriage wall openings.
- Use a properly sized spreader bar to maintain a vertical lift, to avoid placing compression forces on the eaves and to reduce any tendency to slip.
- Connect a rope to at least one point on the home so it can be controlled while aloft.
- Make provisions to retrieve the straps/cables after the home is set. If using a cradle system, notch the sill plate where the straps will fall. For a sling system, notch and reinforce the home's rim joist to keep the strap from slipping and allow the strap to be removed after the home is set.
- Always set the home section farthest from the crane first so that subsequent section(s) need not be lifted over previously set sections.

Have the interior foundation supports already been designed and installed as part of an approved load bearing perimeter wall foundation?

- ▶ **YES,** go to **Complete Multi-Section Set,** (p. 44) or go to **Connect Utilities,** (p. 95) for single section homes.
- ▶ **NO,** go to **STEP 4. CONSTRUCT PIERS,** (p. 40).

STEP 4. CONSTRUCT PIERS

For the side of the home section that is up on jacks, place piers on footings or pads following the home manufacturer's blocking plan (or tags). If no plan was provided, use the support plan developed in **Install Footings** (p. 20). Start at one end of the home section and work toward the other noting the required pier material specifications and procedure described below.

Construct piers so as to provide a stable foundation for the home using materials listed in the specifications box below and based on the location of the pier and its height as measured from the top of the footing, pad or grade to the top of the cap. The pier height can be measured from the lowest surrounding grade to the top of the cap when grade level is above the top of the footing. See **Table 12** for pier construction requirements.

Designing piers. Incorrect size, location or spacing of piers may result in serious structural damage to the home. Install piers at all required locations. Failure to do so may lead to sagging floors, walls and roofs, and could void the home's warranty.

TABLE 11. PIER MATERIAL MINIMUM SPECIFICATIONS

Component	Specification
Concrete Block	Nominal dimensions of at least 8" x 8" x 16"; confirming to ASTM designation C90, grade N
Caps	Solid masonry (nominal 4" x 8" x 16" pre-cast concrete without reinforcement); lumber (nominal 2" x 8" x 16"); or steel (minimum 1/2" thick, corrosion protected by a min. of a 10 mil coating of an exterior paint or equivalent)
Spacers	Nominal 2" thick hardwood boards or nominal 2" or 4" thick concrete blocks.
Shims (also called wedges)	Nominal 4-inch by 6-inch by 1-inch (max. vertical height) wood shims used in pairs. Some states, counties, townships, and or municipalities may require the use of hardwood or treated lumber shims. Other listed shims may be used if installed in accordance with the listing (max load capacity).
Commercial metal or pre-cast concrete piers	Available in various sizes stamped with maximum load capacity and listed or labeled for the required vertical load capacity, and, where required by design, for the appropriate horizontal load capacity. Metal or other manufactured piers must be provided with protection against weather deterioration and corrosion at least equivalent to that provided by a coating of zinc on steel of .30 oz per sq. ft of surface coated. Manufactured pier heights must be selected so that the adjustable risers do not extend more than 2 inches.
Pressure treated wood	With a water borne preservative, in accordance with AWPA Standard U1–04 for Use Category 4B ground contact applications

TABLE 12. PIER CONSTRUCTION

Pier location	Height	Configuration	Maximum offset top to bottom	Maximum Load (lbs)	
				Withour Mortar	With Mortar
Frame	Less than 36 in *	Single stack blocks with long side perpendicular to frame I-beam	½"	5,760	7,680
	Between 36 in and 67 in	Double, interlocked blocks	1"	11,520 lbs.	15,360
	Between 36 in and 67 in	Triple, interlocked blocks	1"	17,280 lbs.	23,034
	Between 68 in and 108 in	Double, interlocked, reinforced blocks	1"	NA	39,500
Perimeter	54 in or less **	Single stack blocks with long side parallel to perimeter rail (rim joist)	½"	5,760	7,680
Marriage line	54 in or less**	Single stack blocks with long side perpendicular to the marriage line	½"	5,760	7,680

* Single stack piers may be constructed up to 54" max. height only when installed as perimeter and marriage line support piers.
** Cross reference maximum allowable pier height with maximum allowable floor height listed in frame tiedown charts. If maximum height listed in frame tiedown charts is exceeded then designs must be provided by a registered professional engineer or registered architect.
Maximum horizontal offset of ½" allowed for pier heights up to 36" and a 1" offset allowed for pier heights between 36" and 67".

1. **Prepare footing surface.** Make sure the footing surface upon which the pier sits is flat and smooth. Before placing the pier on the footing, clean dirt, rocks or other material off the surface of the footing. If the footing surface is uneven, create a level, flat surface by placing a treated board on the footing and mortaring on the first block (or manufactured pier base), or by placing the first block (or manufactured pier base) on a layer of premix dry sand mortar.
2. **Stack blocks.** Stack concrete blocks with their hollow cells aligned vertically. When piers are constructed of blocks stacked side-by-side, orient each layer at right angles to the previous one (**Figure 16**) and plan blocks so that split caps will be perpendicular to the blocks they rest on and perpendicular to the main I-beam.

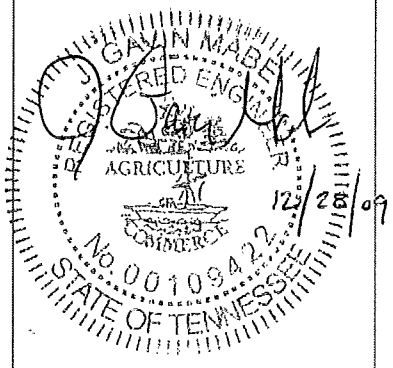

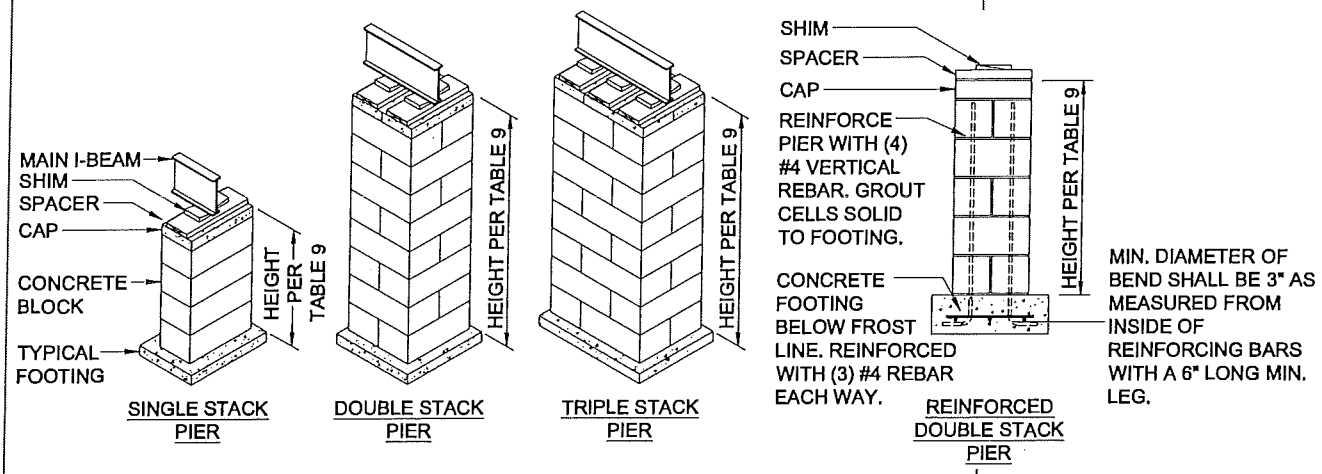

Figure 16. *Frame pier construction.*

3. **Cap piers.** Place a cap on hollow block piers to evenly distribute the structural load. Use caps the same length and width as the piers they rest upon. When using split caps on double-stacked block piers, install the caps with the long dimension perpendicular to the joint in the blocks below and perpendicular to the main I-beam.
4. **Install shims.** Use shims to level the home and fill any gaps between the base of the I-beam and the top of the pier cap. Always use shims in pairs (**Figure 17**). Drive them in tightly so they do not occupy more than one inch of vertical space. When the space to be shimmed is greater than one inch and less than the minimum thickness of available caps or concrete blocks, use hardwood dimensional lumber (two inches maximum thickness) or 4" thick concrete block. For split caps, install shims and dimensional lumber/blocks over each individual cap. Two cap blocks may be used as the cap on double block piers provided the joint between the cap blocks is perpendicular to the joint between the open cell concrete blocks and is also perpendicular to the I-beam supported by the pier.

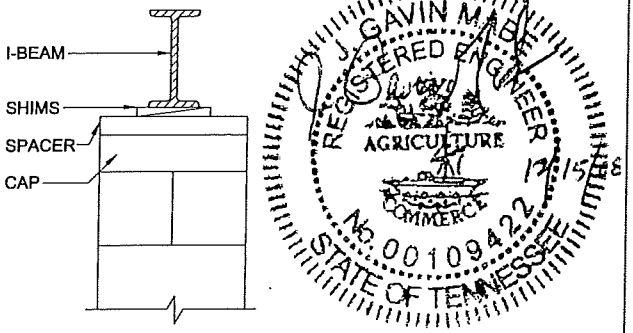

Figure 17. *Correct shim placement*

5. **Set up level.** Set up a water level with the fluid level at the desired height of the main piers. Carefully lower the side of the section down onto the leveled piers, adjusting the final height with shims.

USING A WATER LEVEL

A water level is a standard device for leveling the home. The level consists of the following components:

- One container (five gallon bucket or one gallon jug).
- 150 feet of 1/2 inch diameter clear plastic tubing.
- Fittings for container to tubing.
- Valve for terminal end of tubing.
- Liquid for system: colored water in warm climates, windshield washing fluid in cold climates.

Curing time of mortar. Where wet mortar is used to construct or level piers, allowed it to cure to at least 80% of strength capacity (usually requiring 96 hours) before setting the home.

Dimensions of masonry perimeter walls. If using a masonry perimeter enclosure, calculate pier heights so that the enclosure can be built using standard unit dimensions (without cutting).

Level the home. The home is adequately leveled if there is no more than 1/4 inch difference between adjacent pier supports (frame or perimeter) and the exterior doors and windows of the home do

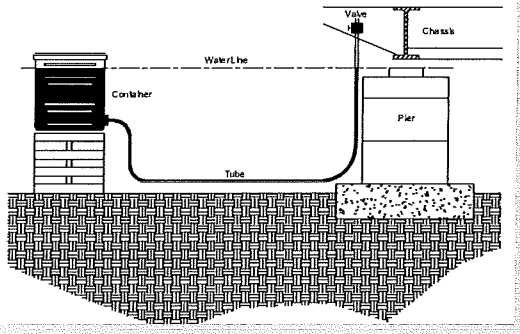

How to use a water level

a. **Position level.** Position the level such that it can reach all piers.

b. **Place container.** Place the container so that the fluid in the container is at the same level as the desired level of the top of the supports under the home, allowing for any bracing below the level of the I-beams.

c. **Uncoil tubing.** Uncoil the tubing and fill with fluid, taking care not to introduce bubbles into the hose. Never allow anything to crimp or crush the tubing so as to impede the free flow of fluid.

d. **Bleed air.** Hold the valve below the level of the water container; open the valve to bleed out any air and close the valve.

e. **Establish height.** Locate the tubing adjacent to a pier that is set to the desired final height. Position the valve above the pier and open the valve. Move the water container up or down to where the water level is at the desired final height of the pier. Maintain the water container in that position and close the valve.

f. **Level piers.** Move the tubing to the next pier. Hold the valve above the pier and open it. Set the pier height to the level of the water in the tubing and close the valve. Repeat this step until all piers are at the same level.

g. **Note:** If water leaks out of the system while in use, you must reposition the reservoir and begin the process again.

6. **Complete the opposite side.** Jack the other side of the section up and install piers following the instructions above. At the completion of this step, the section should be level from front to rear and from side to side.

7. **Install perimeter and marriage line piers.** Install perimeter piers and for multi-section homes, marriage line piers. Position marriage line piers to provide equal bearing for both mating sections.

8. **Remove running gear.** Remove and store, recycle or properly dispose of the hitch, axles and wheels. These items are the property of the homeowner unless other contractual arrangements have been made.

Is this a single-section home?

► YES, go to Connect Utilities, (p. 95).
► NO, go to Complete Multi-Section Set, (p. 44).

not bind and can be properly operated. If differences in pier heights occur, drain lines should be inspected to correct reverse slope situations.

Water level operation. To operate the water level properly, both ends of the system must be open to the atmosphere and there must be approximately the same amount of fluid in the tubing at all times (within a few inches).

Complete Multi-Section Set

This chapter covers the preparation and installation of additional home sections, including the structural connections between units, raising and fastening hinged roofs and fastening the home to a load bearing perimeter wall foundation.

Follow the Steps below:

- STEP 1. INSTALL MARRIAGE LINE ANCHORS (p. 44)
- STEP 2. REMOVE PROTECTIVE SHIPPING MATERIALS (p. 44)
- STEP 3. COMPLETE HINGED ROOF (p. 44)
- STEP 4. REPAIR OR INSTALL MARRIAGE LINE GASKET (p. 45)
- STEP 5. POSITION ADDITIONAL HOME SECTIONS (p. 45)
- STEP 6. CONNECT FLOORS
- STEP 7. CONNECT ROOF
- STEP 8. CONNECT WALLS
- STEP 9. ATTACH TAG UNITS (p. 54)
- STEP 10. REMOVE TEMPORARY ITEMS (p. 55)
- STEP 11. FASTEN HOME TO FOUNDATION (p. 55)
- STEP 12. BACKFILL AND GRADE (p. 55)
- STEP 13. BUILD STAIRS (p. 55)

STEP 1. INSTALL MARRIAGE LINE ANCHORS

If the home is in Wind Zone II or III, install ground anchors along the marriage line now; before mating sections are joined see **Install Stabilizing System** (p. 74). After installing marriage line anchors return to this point in **Complete Multi-Section Set**.

STEP 2. REMOVE PROTECTIVE SHIPPING MATERIALS

Remove all shipping protection and associated fasteners from both home sections to be joined, including plastic used to close up the open sides during transportation. Do not remove the temporary supports holding up the ceilings at major openings. Wind wrap (such as Tyvek or other similar product) will be installed over the exterior wall OSB sheathing and under the shipping plastic. Be careful not to damage the wind wrap when removing the shipping plastic.

STEP 3. COMPLETE HINGED ROOF

If the home has a hinged roof that has been folded down for shipping, refer to **Appendix D** for hinged truss installation information.

Checklists for alternate construction. If the serial number (see the data plate or the chassis front cross member) has the letters "AC" before or after it, then the Alternate Construction on-site check list supplied with the home must be completed and returned to the home manufacturer in a timely manner. If the AC checklist relates to the roof, then failure to do so may require future disassembly of the roof and further inspections.

STEP 4. REPAIR OR INSTALL MARRIAGE LINE GASKET

A continuous, non-porous gasket creating a permanent air barrier will be installed on at least one side of the marriage line; along the floor, end walls and ceiling (and marriage lines for any tag units). The manufacturer has provided a marriage line gasket either installed on the home or shipped loose. If installed, inspect the gasket and repair any gaps or tears.

If not installed at the factory, install a continuous gasket between the home sections along the floor, end walls and ceiling.

For homes with through-the-rim crossover ducts (see **Connect Crossovers**, p.61) Inspect and if necessary, repair gaskets around the rim joist duct openings using 3/4 inch thick fiberglass duct board or other material acceptable to the manufacturer. Ensure that duct openings are unobstructed.

Checking through-the-rim-ducts. Ensure that through-the-rim-duct connections are secure and tight after the home sections are together.

STEP 5. POSITION ADDITIONAL HOME SECTIONS

Follow this procedure to install additional home sections:

1. **Remove obstructions.** Remove protruding nails and staples or anything else that will keep the home sections from fitting together snugly. If present, cut the temporary ceiling and floor plates at the edges of marriage line openings taking care not to damage ceiling or floor coverings or displace temporary marriage line support posts (these supports and the plates will be removed after the home sections have been structurally connected).
2. **Complete crossovers.** Before moving the two sections together, complete any crossover connections that require access from the open marriage line, including the attic duct connection (if present) and marriage wall interior electrical connections (see **Connect Crossovers**, p.61).
3. **Position section.** Position the section as closely as possible (ideally within six inches) and line up with the previously set section. If using a mechanical positioning system or crane, follow the system manufacturer's instructions or the crane operator's directions.
4. **Construct piers.** With the outside walls of the home aligned, construct the piers for the home section according to the instructions in **Set the Home** (p.38) before continuing to the steps below.
5. **Level section.** Lower the section onto the outside piers first, inside piers last. Before releasing the mechanical positioning system, check interior doorways and other openings for misalignments that may cause problems during trim-out. The floors should be flush, level and tight and the roof section should have little, if any, gap at the top of the marriage line. Use at least two come-a-longs to pull the sections snugly together and use the water level or other leveling device to set all piers and shims.
6. **Shim gaps.** Shim any gaps up to one inch between structural elements with dimensional lumber. If any gaps exceed one inch, re-position the home to eliminate such gaps.

Mechanical positioning system. For a pier-set home, a mechanical positioning system (such as a roller system) will make the process easier and safer and be less likely to damage the home.

Safety. *Remember to place safety timbers under home behind axle area and under hitch.*

Sealing gaps. Prior to completion of the exterior close-up, gaps that do not exceed one inch are permitted between structural elements provided that the gaps are closed before completion of close-up, the home sections are in contact with each other; and the marriage gasket provides a proper seal.

STEP 6. CONNECT FLOORS

Make floor structural connections according to the appropriate method described below.

A sealing gasket shall be present between marriage line rim joists.

Alternate 1: Toed fasteners through bottom board

Make connections according to the fastener specifications in **Table 13** and **Table 13A (Figure 18)**. Spacing indicated in **Table 13** and **Table 13A** is on-center, both sides of marriage line. Fasteners on each side of marriage line shall be staggered and offset by twice the spacing distance (**Figure 18A**). Repair any tears or holes in the bottom board after installation of fasteners.

TABLE 13. FLOOR CONNECTION FASTENING SPECIFICATIONS

Fastener		Spacing		
Type	Size	Wind Zone 1	Wind Zone 2	Wind Zone 3
Lag screw	5/16" x 4"	20 in.	20 in.	20 in.

TABLE 13A. FLOOR CONNECTION FASTENING SPECIFICATIONS – HOMES WITH ROOF PITCH GREATER THAN 20 DEGREES AND TRIPLE WIDE HOMES

Fastener		Spacing		
Type	Size	Wind Zone 1	Wind Zone 2	Wind Zone 3
Lag screw	5/16" x 4"	20 in.	12 in.	12 in.

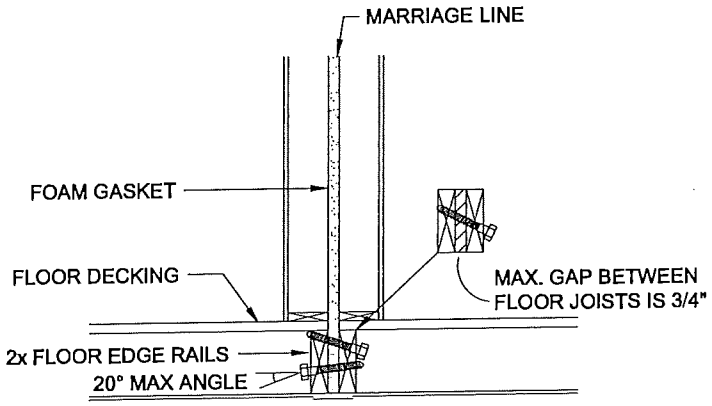

Figure 18. *Floor connection through perimeter rails*

The maximum gap between floor joists is 3/4". Exception: Marriage walls taller than 108" with 24" on-center studs, the maximum gap is 1/4". Gaps must be shimmed at each connection with dimensional lumber. The fastener length must be increased if necessary so that 1-1/2" minimum penetration into joist is maintained. The lag spacing must be reduced per **Table 13B**.

TABLE 13B. FLOOR CONNECTION FASTENER SPACING REDUCTION FOR HOMES WITH GAP BETWEEN FLOOR JOISTS

Gap	Original Spacing	Reduced Spacing	Original Spacing	Reduced Spacing
1/4" Gap	12 in.	9 in.	20 in.	15 in.
3/4" Gap	12 in.	6 in.	20 in.	10 in.

NOTE: Use additional insulation or foam sealant if necessary to minimize air infiltration at all gaps.

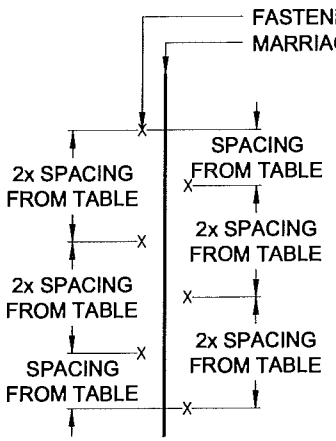

Figure 18A. *Staggered offset fastening along marriage line*

Additional fastening requirements:

- Fasteners to be installed at approximately a 20 degree angle from horizontal.
- Two additional fasteners are required at each end of the home.
- One additional fastener is required at each side of through-the-rim crossover duct openings.
- Increase fastener length by three inches for double rim joists.
- Lags to include washer.

STEP 7. CONNECT WALLS

Make wall structural connections according to the appropriate method described below.

Bolt or lag end studs behind sheathing

Make connections by installing fasteners from inside the end wall (**Figure 19**) according to the fastener specifications and spacing requirements in **Table 14**, and the following requirements.

Install the exterior wall sheathing panel after the endwalls have been fastened.The panel should be replaced using min 15ga x 7/16" x 1-1/2" staples or 6d nails spaced 2-1/2 inches o.c. to all horizontal and vertical framing members.

TABLE 14. END WALL CONNECTION SPECIFICATIONS – FROM BEHIND SHEATHING

Fastener type	Size	Spacing
Wood screw	#10 x 4-1/2"	24 in. o.c.
Lag Screw	3/8" x 6"	43 in. o.c.

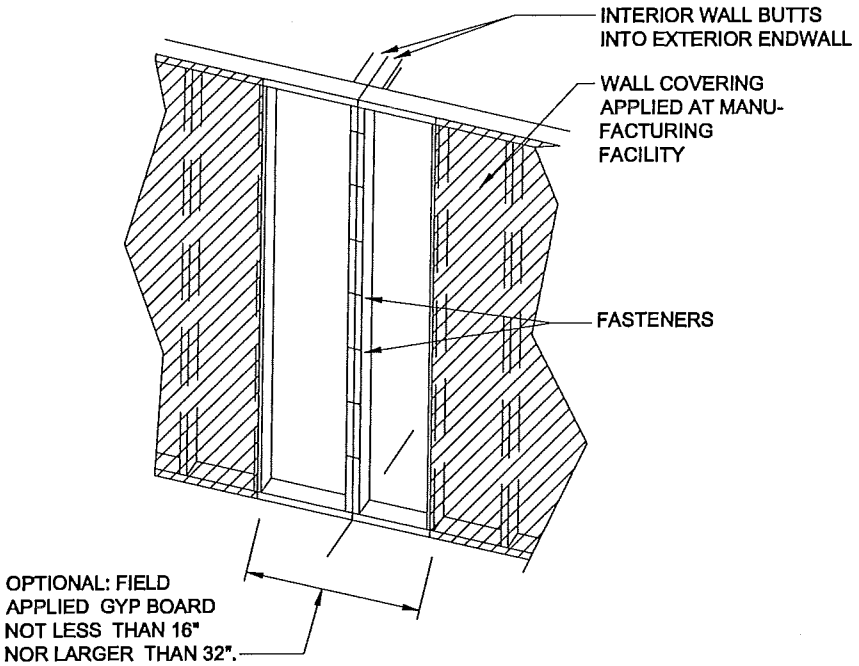

Figure 19. *Endwall connections*

Gyp board applied with one of the following adhesives and fastening options.

Accepted adhesives:

- Tacc MH-9000 Adhesive:

Application - 3/8" "D' type bead applied to all studs, top and bottom plates. A double bead or surpentine bead to be applied at the stud(s) at the wallboard joints. Wall panel fastened at 6" o.c. at the edges and mting wall studs. No field fastening req'd.

- Tacc Gun & Go PVA Adhesive

Application - 3/8" "D" type bead applied to all studs, top and bottom plates. A double head or serpentine bead to be applied to the stud(s) at the wallboard joints. Wall panel fastened at 6" o.c. at the edges and mating wall studs. No field fastening req'd.

- Alpha Pemco 5100 Polyurethane Adhesive

Application - (2) two 1/16" (average) beads applied to all studs, top and bottom plates. Wall panel fastened with 3/16" x 3/4" x 19 ga. Staples @ 6" o.c. along the top and bottom plates. (1) one fastener is required at each stud in the following locations: 6" from the top of the panel, 6" from the bottom of the panel and at the center of the stud. For studs at wallboard joints, install (2) two rows of fasteners (one for each panel).

Accepted Fastenings:

- Staples - minimum 1/4" crown x 1 1/2" leg x 18 ga. unless otherwise noted.
- Minimum 1 1/2" drywall screws may be substitiuted for staples using the same spacing.

Marriage wall columns, openings and interior partitions

Make connections inside the home along the marriage walls (**Figure 19A** and **Figure 19B**) by installing fasteners according to the specifications and spacing requirements in **Table 14A**. Toe screw for 2 x 4 or 2 x 6 studs.

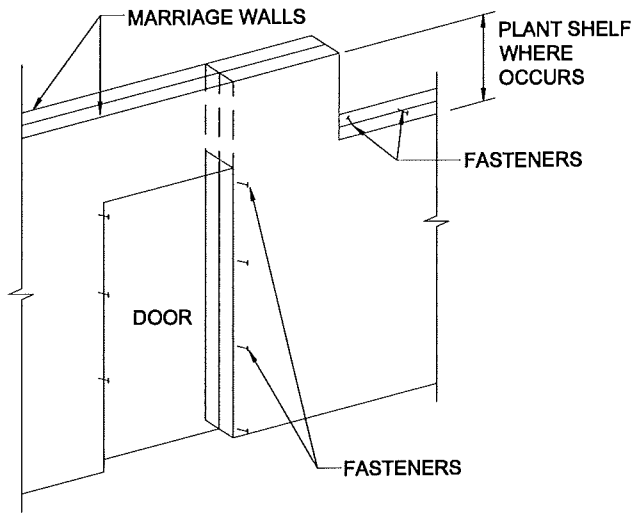

Figure 19A. *Marriage wall connections*

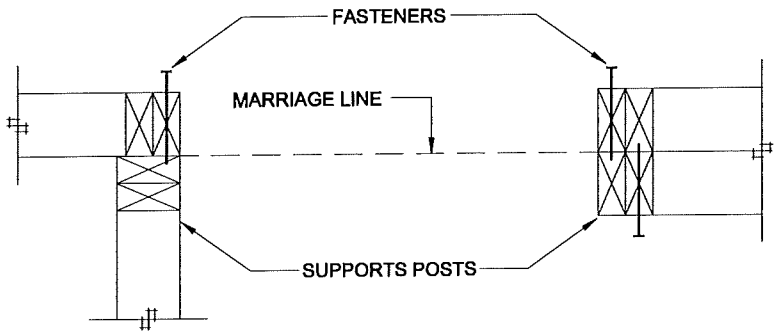

Figure 19B. *Marriage wall connections*

TABLE 14A. MARRIAGE WALL CONNECTION SPECIFICATIONS

Fastener type	Size	Spacing
Wood screw	#10 x 4-1/2"	24 in. o.c.
Lag Screw	3/8" x 6"	48 in. o.c.

STEP 8. CONNECT ROOF

DOUBLE SECTION HOME RIDGE LINE

Make roof structural connections according to the appropriate method described below. If the home has a hinged roof, see also the section on hinge roof raising and fastening.

Make the roof connection by fastening through the roof deck into the continuous roof edgerail or ridgebeam (**Figure 20**) according to the fastener spacing and specifications in **Table 15** and the following requirements:

- Install fasteners (with washers if required) at an approximately 30 degree angle (+/- 5 degrees) from horizontal.
- Spacing indicated is on-center, both sides of ridge. Fasteners on each side of marriage line to be staggered and offset by twice the spacing distance.
- Fasteners must penetrate the ridge beam or roof edgerail by a min of 1-1/2 inches both sides of ridge.

Metal caps must meet the following requirements:

- Made of 6" x 30ga galvanized steel.
- Continuous, overlapped by min of four inches at splices.
- Fastened with 7/16" x 16ga galvanized staples or roofing nails.
- Fastened at two inches o.c. both sides of ridge.

Metal straps must meet the following requirements (**must be used on homes with continuous ridge vent application**):

- Made of 1-1/2" wide x 26ga galvanized steel.
- Spaced a min of 48 inches o.c.
- Fastened to each side of the truss with nine (9) 7/16" x 16ga. galvanized staples or nine (9) 0.099" x 1-1/2" nails.

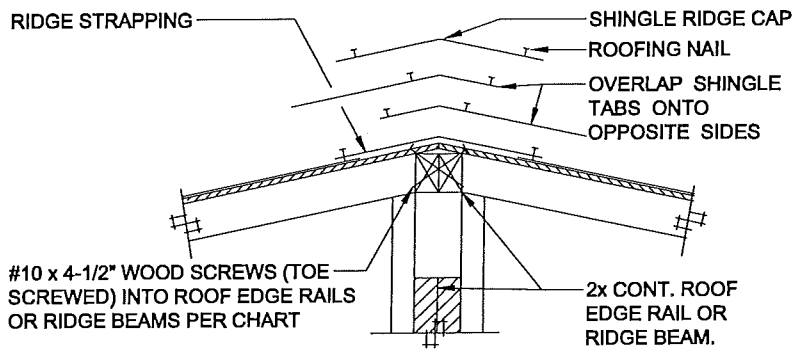

Figure 20. *Roof connection*

TABLE 15. ROOF EDGE RAIL CONNECTIONS SPECIFICATIONS

Fastener		Spacing		
Method	Type	Wind Zone 1	Wind Zone 2	Wind Zone 3
Metal cap/strap OR wood screws	#10 x 4-1/2"	11 in. o.c.	NA	NA
	26ga Straps	48 in. o.c.	NA	NA
Metal cap/strap AND wood screws	#10 x 4-1/2"	NA	24 in. o.c.	24 in. o.c.
	26ga Straps	NA	48 in. o.c.	48 in. o.c.

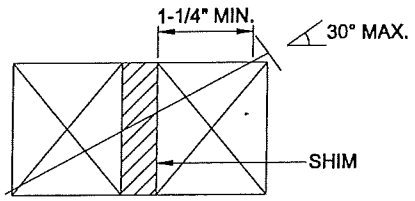

Figure 20A. *Gap between roof edge rail or ridgebeam*

Max. gap between edge rails or ridge beams is 1-1/2". Exception: for marriage wall taller than 108" with 24" o.c. studs, max. gap between roof edge rails or ridge beams is 1/4". Gaps must be shimmed at each connection with dimensional lumber. Fastener length must be increased if necessary so that 1-1/2" of penetration into main member is maintained.

For wind zone 1 homes that use flashing only, install a 6" shim at 48" on-center along the roof line.

Specified screw spacing must be reduced by half in locations where gap occurs.

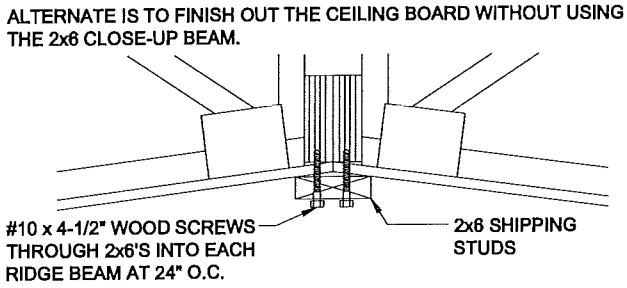

Figure 20B. *Alternate roof connection*

Notes:
1/4" min. Lag screws can be substituted for #10 wood screws of the same length. Pre-drill holes if necessary to prevent excessive splitting in the edge rails. Lag screws or wood screws may be added as needed to minimize gaps. Use extra insulation or foam sealant to minimize air infiltration at all gaps.

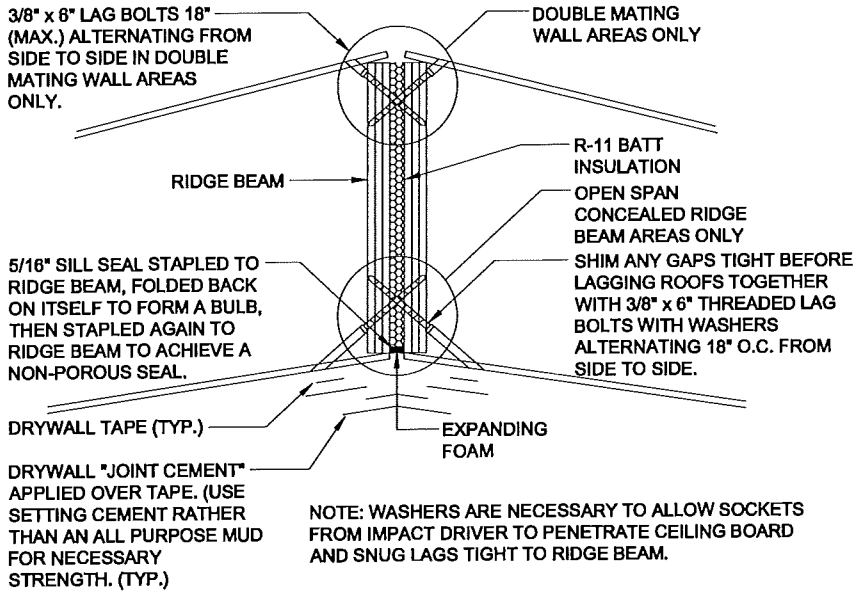

Figure 20C. *Alternate roof connection*

TRIPLE SECTION ROOFS

For triple section homes where roof lines run parallel to each other on adjacent units (**Figure 20D**), follow these instructions to complete the structural and weather-resistant connections at the roof. Wall and floor connections are the same as for double section homes. For tag units (where the tag ridge line is perpendicular to the main home primary ridge line) see the section of the manual on tag units.

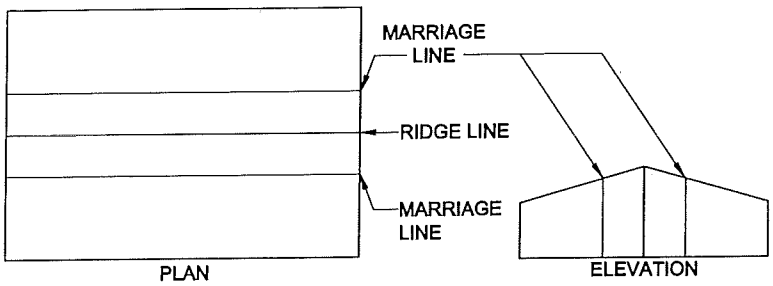

Figure 20D. *Triple section home*

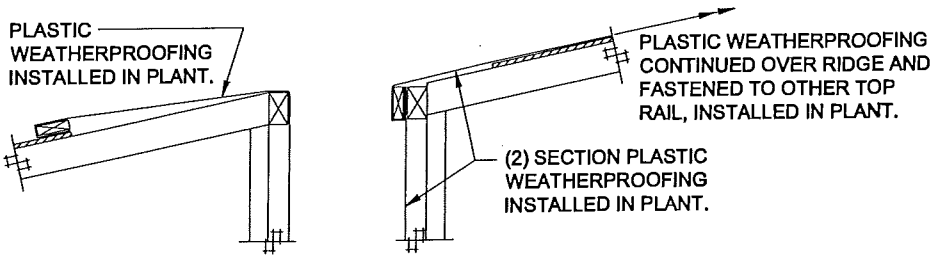

Figure 20E. *Removal of shipping plastic*

Remove the shipping plastic from all sections prior to mating each section together (**Figure 20E**).

Alternate 1

For homes where sheathing is shipped loose to be installed on site see **Figure 20F** and **Table 15A** and follow the steps below:

1. **Underlayment:** If excess underlayment is factory installed, fold down the underlayment of the outer section roof. Apply a min six inch wide strip of roofing cement at edges and twelve inch wide strip of roofing cement at seams, then lay the underlayment that is shipped loose on top of it. Repeat this procedure on the center section.
2. **Sheathing:** Minimum 7/16" thick, 24/16 APA rated panels must be continuous over two spans minimum. Long face dimension of sheathing must be perpendicular to truss top chords. Fasten field-installed sheathing to all underlying blocking and framing with 10d x 2" box nails at four inches o.c. in field and perimeter. Panel clips are not required for panels 24" or greater.
3. **Shingles:** Install missing row(s) of shingles as required. Fasten shingles w/ 5" exposure. Locate shingle fasteners 5-5/8" above the butt edge and 1" from each end. Refer to shingle manufacturer's installation for fastening instructions.

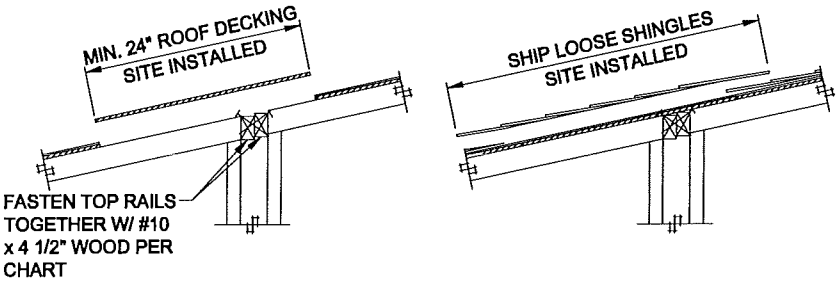

Figure 20F. *Triple section roof connection*

TABLE 15A. ROOF EDGE RAIL CONNECTION SPECIFICATIONS

Fastener		Spacing		
Type	Size	Wind Zone 1	Wind Zone 2	Wind Zone 3
Wood screw	#10 x 4-1/2"	8 in. o.c.	8 in. o.c.	8 in. o.c.

Alternate 2

For homes where sheathing is in place on both sides of the marriage line, see **Figure 20G** and **Table 15B** and follow the steps below:

1. **Underlayment:** If excess underlayment is factory installed, fold down the underlayment of the outer section roof. Apply a min six inch wide strip of roofing cement at edges and twelve inch wide strip of roofing cement at seams, then lay the underlayment that is shipped loose on top of it. Repeat this procedure on the center section.
2. **Shingles:** Install missing row(s) of shingles as required. Fasten shingles w/ 5" exposure. Locate shingle fasteners 5-5/8" above the butt edge and 1" from each end. Refer to shingle manufacturer's installation for fastening instructions.

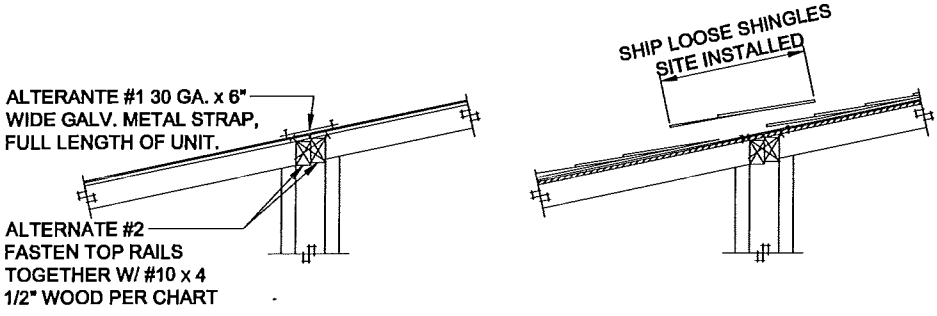

Figure 20G. *Triple section roof connection*

TABLE15B. ROOF EDGE RAIL CONNECTION SPECIFICATIONS

Fastener		Spacing		
Type	Size	Wind Zone 1	Wind Zone 2	Wind Zone 3
30 ga x 6" Metal Strap	7/16" x 15 ga Staples or Roofing Nails	2 in. o.c.	2 in. o.c.	2 in. o.c.
Wood screw	#10 x 4-1/2"	8-1/2 in. o.c.	8-1/2 in. o.c.	8-1/2 in. o.c.

The continuous 30 ga x 6" metal strap must be overlapped at end splices 4" minimum.

Do additional sections (non tag) remain to be positioned?
- ▶ YES, go to STEP 1. INSTALL MARRIAGE LINE GROUND ANCHORS (p. 41)
- ▶ NO, continue below.

Is there a tag unit?
- ▶ YES, go to STEP 9. ATTACH TAG UNITS (p. 54)
- ▶ NO, continue below.

Is there a hinged roof?
- ▶ YES, go to STEP 8. COMPLETE HINGED ROOF (p. 46)
- ▶ NO, go to STEP 9. ATTACH TAG UNITS (p. 54)

STEP 9. ATTACH TAG UNITS

After the main unit has been set on its foundation, install all tag units according to the following procedure:

1. **Position and block the tag.** Position the tag unit as close to the main unit as possible at its intended location. Use a hitch jack to obtain approximate leveling and install pier supports according to **Set the Home, STEP 2. POSITION HOME SECTION** (p. 38). Determine whether the tag and main unit floors are designed to line up flush or are offset by a step and adjust the tag pier heights accordingly.
2. **Level the unit.** Using a water level (p.42), verify that the piers are level. The elevation of all points along the lower flange of the I-beam should be a no more than 3/8 inches from the desired height and should not deviate more than 3/4 inches overall.
3. **Connect floors.** If the floor of the tag unit is level with main unit floor, connect the floors together as described in **STEP 6. CONNECT FLOORS** (p. 45). If the floors are offset, use the connection detail shown in **Figure 21**.
4. **Connect walls.** Secure the tag unit walls to the main unit sidewall using #10 x 4" screws at 24 inches o.c. If pre-drilled holes are provided secure the tag unit walls to the main unit with 5/16" x 6" lag screws (see **Figure 22**). The sheathing shown in the detail may not be included by the manufacturer. If included, the sheathing over the last stud bay was tacked in place at the factory for easy removal at the site. Once the wall connections are complete, re-install the sheathing and complete the siding installation.

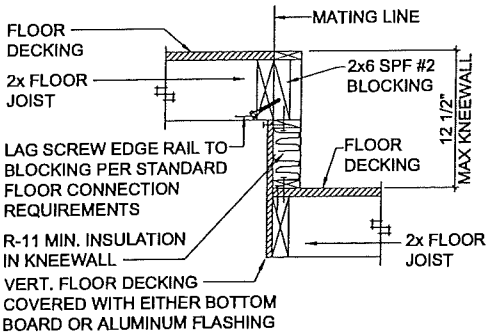

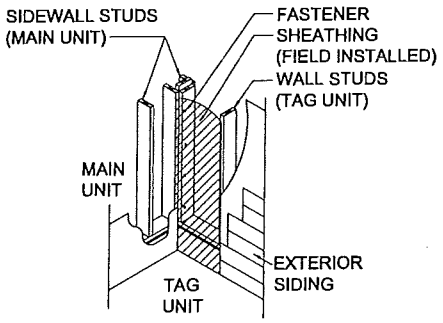

5. **Connect roofs.** Connect the tag unit roof to the main unit roof using #10 x 4" screws at 12" on-center (8" on-center in Wind Zone 3) or #8 x 4" screws at 8" on-center (5" on-center in Wind Zone 3) toe screwed through tag unit end truss top chord into each main unit dormer vertical structural member location (stud or truss). If full depth ridgebeam headers must be connected refer to **Connect Roofs**. See **Figure 23** for flush roof connections and **Figure 24** for roof connections with an offset greater than two inches. Roof connections with an offset less than two inches do not require screws.

Piers under tag units. Some tag units have special piering needs due to the roof and/or floor construction. These will be detailed in supplemental piering plans supplied with the home. Note that tag unit end walls are typically load bearing rather than side walls.

Figure 21. *Tag unit offset floor connection*

Figure 22. *Tag unit wall connection*

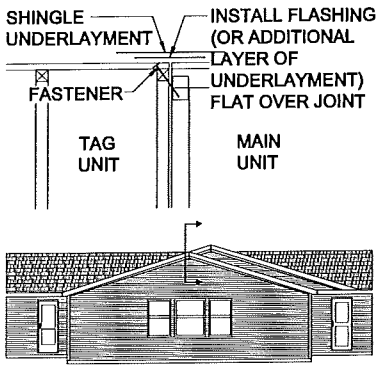

Figure 23. *Tag unit flush roof connection*

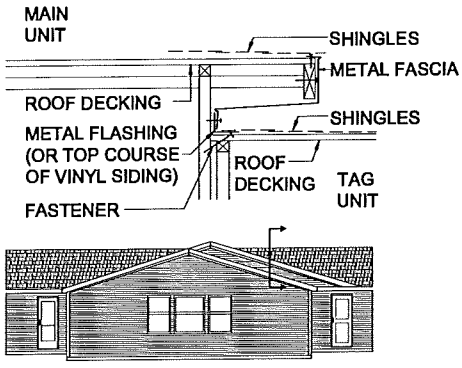

Figure 24. *Tag unit offset roof connection*

STEP 10. REMOVE TEMPORARY ITEMS

Once the home is properly supported and the marriage line connections are completed, remove the temporary ridge beam supports and wall/ceiling plates used to brace the ridge beam during shipment. Take care not to damage the ceiling.

Is the home supported on a load bearing perimeter wall?

- ▶ YES, go to **STEP 11. FASTEN HOME TO FOUNDATION** (p. 55).
- ▶ NO, go to **Complete Roof and Exterior Walls** (p. 56).

STEP 11. FASTEN HOME TO FOUNDATION

Fasten the home to the foundation according to the fastening schedule provided in **Construct Foundation, STEP 1. OBTAIN A FOUNDATION DESIGN** (p.35).

Is the home supported on a basement foundation?

- ▶ YES, go to **STEP 12. BACKFILL AND GRADE** (p. 55).
- ▶ NO, go to **Complete Roof and Exterior Walls** (p. 56).

STEP 12. BACKFILL AND GRADE

Backfill against the foundation wall to the height of the waterproofing, taking care to not damage the drainage system.

Grade the site as described in **Prepare the Site, STEP 3. CLEAR AND GRADE THE SITE** (p.16).

STEP 13. BUILD STAIRS

Construct the basement stairs in compliance with the local building code. Take care that adequate headroom is maintained under beams and that there is sufficient landing space at the bottom of the stairs.

- ▶ go to **Complete Roof and Exterior Walls** (p. 56).

When to backfill. Backfill against basement walls only after the home is connected to the foundation or the basement walls may deflect inward or collapse.

Cutting the chassis. Do not cut, notch, bend or alter in any manner beams, cross-members and other parts of the steel chassis.

Complete Roof and Exterior Walls

This chapter covers closing up and weatherproofing the home by completing the roofing and siding.

Follow the Steps below:

- STEP 1. COMPLETE ROOF (p.56)
- STEP 2. COMPLETE TAG UNIT ROOF (p.58)
- STEP 3. COMPLETE SIDE WALLS (p. 60)

STEP 1. COMPLETE ROOF

RIDGE CLOSEUP

For multi-section homes, the first step in completing the exterior is sealing the roof along the ridge line (**Figure 25**). For homes with asphalt shingles, follow the procedure below. For homes with metal or other roofing materials, follow the instructions that come with the roofing materials or provided as a supplement to this manual.

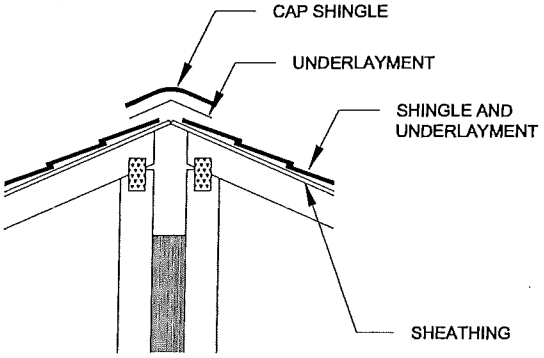

Figure 25. *Shingle installation at ridge*

1. **Install underlayment.** Sheathing must be fastened with a 10d nail at 4 inches on-center along the edges and 4 inches on-center in the field. Seams of field installed sheathing must be offset 16 inches from the seams on factory installed sheathing. Install 15# felt or equivalent continuously along the length of the ridge, covering all exposed sheathing and overlapping sheathing joints by at least five inches on each side. Fasten using 1" x 1" x 16 ga galvanized staples. For Wind Zones II and III, also apply a six inch wide strip of roofing cement along each side of ridge under the underlayment.
2. **Install shingles.** If shingles have been left off at the ridge line for site installation, install them now using 12 ga x 1-1/4" long, 3/8" diameter head roof nails or 16 ga 1" crown x 1" length staples. For Wind Zone I, fasten at 5/8 inch above each tab cutout slot and one at each end of the shingle one inch in from the edge (four fasteners for a three-tab shingle) (**Figure 26**). For Wind Zones II and III, use two fasteners 5/8 inch above and on either side of the tab slots and one at each end of the shingle one inch in from the edge (six fasteners for a three-tab shingle). Do not fasten through the shingle tar line.

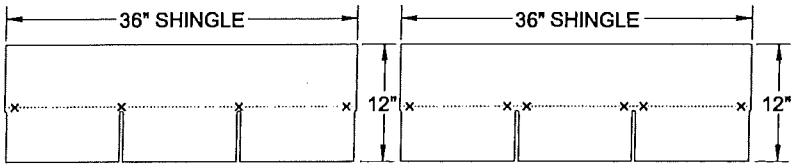

× FASTENER LOCATIONS

Figure 26. *Shingle fastener locations for Wind Zone I (left) and Wind Zones II and III (right).*

3. Install underlayment. Install 15# felt or equivalent underlayment that is at least 10 inches wide continuously along the ridge. Fasten with 1" x 1" x 16 ga galvanized staples. For Wind Zones II and III, also apply a six inch wide strip of roofing ce-

Weatherproofing. It is vitally important to close up the home quickly to protect the interior from damage due to inclement weather.

Removing shipping protection. Remove shipping protection from the roof prior to completing roofing. Seal all holes in shingles resulting from shipping protection removal. It is also recommended that the top layer of shingles be lifted and the sealant applied to any holes in the second layer of shingles. **Refer to Warning on following page for acceptable types of sealants.**

ment on both sides of the ridge under the underlayment.

4. **Install shingle cap.** Starting at the opposite end of the home from the prevailing wind, install ridge cap shingles provided by the manufacturer or use 12" x 12" shingles (36" shingles cut into three equal pieces) (Figure 27). Install using 12 ga x 1-1/4" long, 3/8" diameter head roofing nails spaced 5-5/8 inches from bottom edge and 1/2 inch to 1-1/2 inches in from both edges. Cover the exposed fasteners with tar or cement.

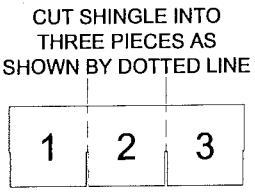

Figure 27. *Shingle cut into thirds*

5. **Ridge Vent.** For proper alignment – prenail through ridge vent holes at ends of each section. The felt paper underlayment should be folded back onto the roof decking and trimmed along the edge of the roof decking at the peak so that it does not obstruct the opening at the mate line. When using standard flat 3-tab shingles, caulking is not required under the flange of the ridge vent. Prior to applying vent to dimensional or architectural shingles on new construction, caulk between low areas of shingle and flange of vent. Before fastening vent, make sure filter is secured between shingles and vent. When installing vent in cold weather, leave an 1/8" gap between sections to allow for warm weather expansion.

Installing a ridge vent. If a ridge vent is to be installed, follow the ridge vent manufacturer's instructions provided with the material or as an addendum to this manual in lieu of underlayment over ridge line and shingle cap.

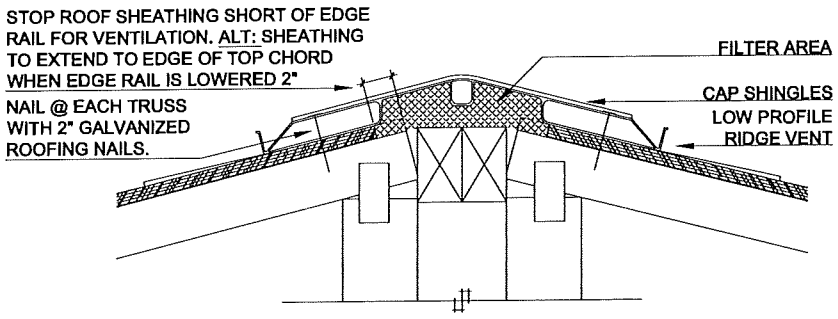

Figure 28. *Ridge vent installation*

ACETOXY TYPE SILICONES ARE NOT TO BE USED. This type of silicone will weaken or melt asphalt shingles. The Alcoxy or Neutral Cure type silicones will not melt asphalt and are the proper silicones to be used in roof applications. All sealants used in shingle and roof applications, excluding underlayment securement, must be an Alcoxy or Neutral Cure type silicone OR meet the ASTM D 4586 standard. Asphalt/Asbestos based sealants, such as Black Tar, must meet the ASTM D 4586 standard. Shingle underlayment sealants are required in Wind Zone II and III applications and must meet the ASTM 3019 standard.

HINGE ROOF CLOSE-UP

For homes with hinged roofs, complete roofing underlayment and shingles along the hinge line per the requirements listed in **Appendix D**.

COMPLETE TRIPLE SECTION ROOFS

Complete roofing along triple section home marriage lines according to one of the following methods based on the construction of the home.

Method 1: Dual ridge beams

1. **Install underlayment.** Fold down the underlayment of the outer section roof and apply a minimum six inch wide strip of roofing cement to the sheathing. Lay the underlayment of the outer section on top of the cement (see Best Practice tip for optional metal flashing). Then apply a minimum six inch wide strip of roofing cement to the outer section underlayment and fold down the center section roof underlayment over this cement.
2. **Install shingles.** Install missing row(s) of shingles, securing them per the shingle manufacturer's installation instructions (refer to the shingle wrapper).

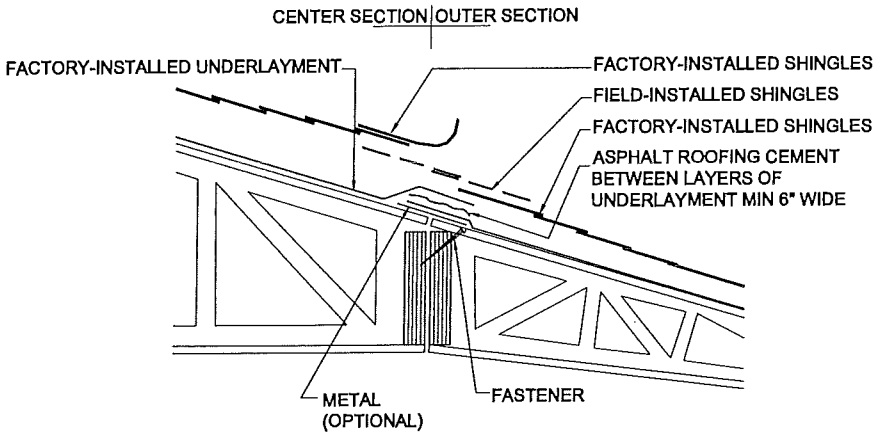

Figure 29. *Triple section roof connection Method 1*

Installing metal flashing. Install optional metal flashing over the roof decking before applying roofing cement. Fold back the underlayment and fasten 30 ga x 6" wide minimum galvanized metal with roofing nails or 16 ga x 1" crown staples of sufficient length to penetrate the roof sheathing. Space fasteners four inches o.c. or less near the edge of the metal. Overlap the metal by at least two inches at joints.

Method 2: Field installed sheathing

1. **Install underlayment.** Fold down the underlayment of the outer section roof and fold up the underlayment on the center section roof. Apply to the lower roof underlayment a minimum six inch wide strip of roofing cement centered on the sheathing joint. Cover with the shipped loose underlayment. Apply another minimum six inch wide strip of roofing cement to the ship loose underlayment centered on the upper roof sheathing joint.
2. **Install shingles.** Install missing row(s) of shingles per the shingle manufacturer's installation instructions (refer to the shingle wrapper).

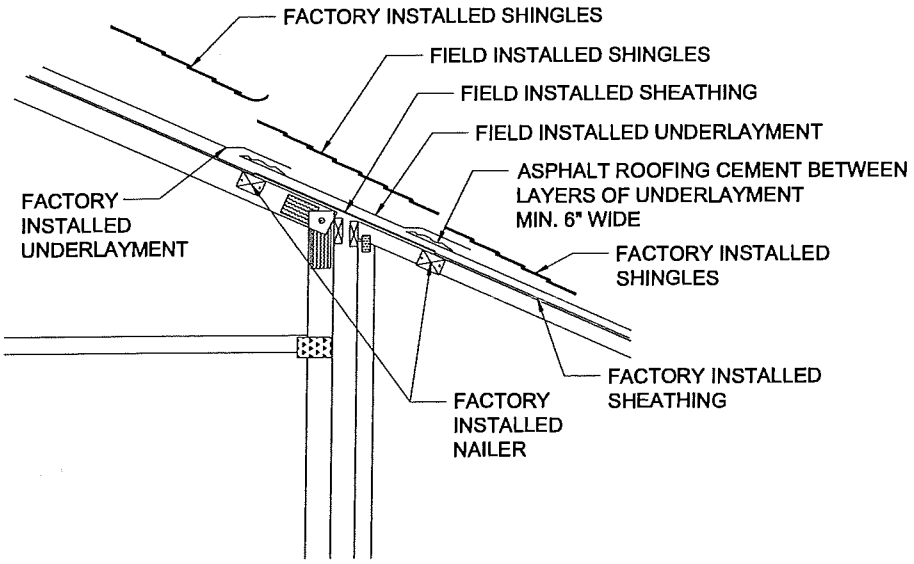

Figure 30. *Triple section roof connection Method 2*

STEP 2. COMPLETE TAG UNIT ROOF

If the home has a tag unit, complete roofing for this unit now. The process for completing the roof is different for flush and offset roofs. Follow the instructions in the appropriate section below.

FLUSH ROOFS

For flush roofs, complete roofing along the marriage line and at the valley line as follows (see **Figure 31**):

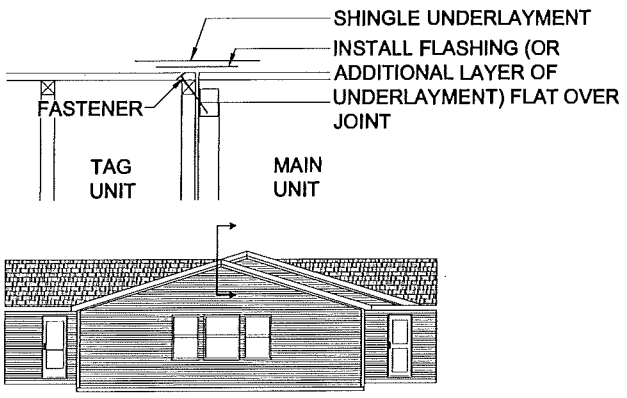

Figure 31. *Tag unit flush roof connection*

Marriage line

Method 1: Install metal flashing (minimum 30 ga x minimum 6" wide) over the joint between the main roof dormer and tag unit roof. Secure the flashing to the roof decks on both dormer and tag unit roofs with roofing nails or 16 ga staples with a one inch crown and long enough to fully penetrate the roof decks. Space fasteners maximum two inches o.c. near the edge of the flashing. Overlap seams in the metal by at least two inches. After flashing is complete, install shingles per shingle manufacturer instructions and ridge cap/vent according to **STEP 1. COMPLETE ROOF** (p. 56).

Method 2: Install two layers of roofing underlayment or equivalent over the joint between the main roof dormer and tag unit roof lapping the factory installed underlayment a minimum of six inches on each side and fully cemented at the laps. Install shingles per shingle manufacturer instructions and ridge cap/vent according to **STEP 1. COMPLETE ROOF** (p. 56).

Valley line

Along the bottom of the valley, shingles and one or more layers of roll roofing may need to be installed. If fastened to the roof at the factory, unroll the roofing, overlap the tag roof and trim the roofing to the roof edge. If shipped loose, install the roll roofing at the valley, lapping it under the factory installed roll roofing a minimum of 12 inches and fully cement the roofing at the lap. Complete shingles at the valley either by interweaving them or by trimming back approximately four inches from the valley line and fully cementing the exposed shingle edges. Fasteners must not be installed within 6" of the centerline of the valley.

OFFSET ROOFS

If there is a gap between the main unit dormer overhang and the tag unit roof of less than two inches, fold up the main unit dormer fascia, slide the underlayment and flashing from the tag unit roof behind the fascia, and bend the fascia back down and secure into sub fascia with metal screws (**Figure 32**).

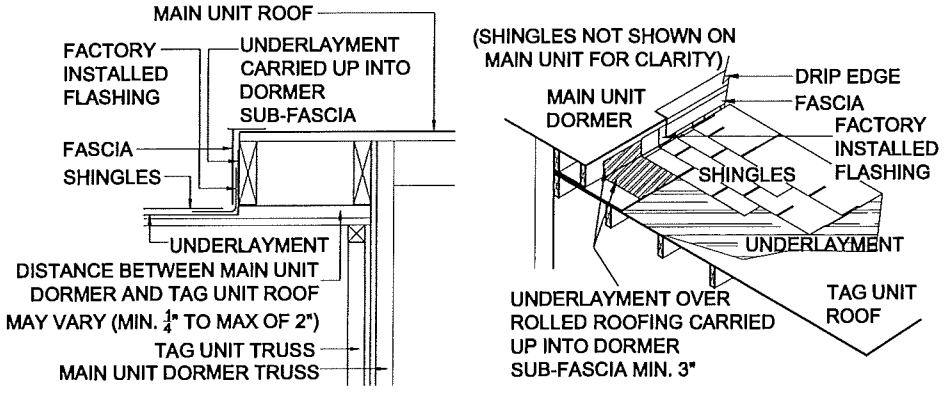

Figure 32. *Tag unit roofing connection with less than two inch height difference*

If the gap between the main unit dormer overhang and the tag unit roof is two inches or more, bend up the inside corner trim at the dormer overhang and main unit sidewall, fold up the factory installed flashing on the tag unit roof, fold the inside corner trim back down and secure into dormer wall with metal screws (**Figure 33**).

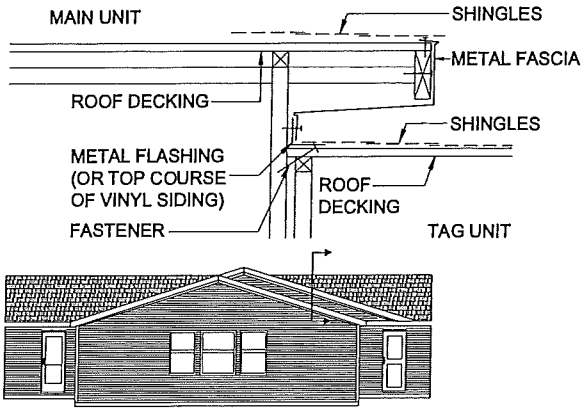

Figure 33. *Tag unit offset roof connection*

STEP 3. COMPLETE SIDE WALLS

Siding necessary to complete the exterior has been provided with the home. Follow the siding manufacturer's instructions (found on or with the packaging or as an addendum to this manual) and to complete the exterior siding as follows:

1. **Remove shipping protection.** Remove temporary shipping protection from walls.
2. **Complete crossovers.** Complete any crossover connections in the walls, including: electrical, stereo speaker, doorbell, telephone and intercom wires.
3. **Install siding.** Fasten siding only at stud locations, avoiding electrical wires that are present in the walls.
4. **Fasteners.** Fasteners must be installed as described in the manufacturer's installation instructions or DAPIA approved test reports for the siding.
5. **Install close-up strips.** If siding has been installed on the end walls at the factory, fasten close-up strips securely along both edges and seal the edges with a waterproof sealant.
6. **Install trim.** Install any matching trim required to complete the installation.
7. **Seal penetrations.** With a waterproof sealant, seal any penetrations in the siding that may have been caused by temporary shipping protection.

Covering the HUD label. Do not cover the HUD label on the exterior of the home.

Removing shipping protection. Remove temporary shipping protection from walls before installing siding or serious moisture damage may result. Wind wrap (such as Tyvek or other similar product) will be installed over the exterior wall OSB sheathing and under the shipping plastic. Be careful not to damage the wind wrap when removing the shipping plastic.

▶ go to Connect Crossovers (p. 61)

Connect Crossovers

This chapter covers crossover connections between units of multi-section homes, including ducts and electrical, water, waste, gas, telephone and cable TV connections.

Follow the Steps below:

- STEP 1. CONNECT DUCTS (p. 61)
- STEP 2. CONNECT ELECTRICAL CROSSOVERS (p. 64)
- STEP 3. INSTALL ELECTRICAL BONDING (p. 67)
- STEP 4. CONNECT WATER LINES (p. 67)
- STEP 5. CONNECT DRAIN, WASTE AND VENT LINES (p. 69)
- STEP 6. CONNECT GAS LINES (p. 70)
- STEP 7. CONNECT TELEPHONE AND CABLE TV WIRING (p. 71)

STEP 1. CONNECT DUCTS

There are three main types of duct crossover connections. Based on the location of the duct, follow the installation steps on the page indicated below:

- Under the floor (p. 61).
- In the roof cavity (p. 62).
- In floor, through-the-rim joist (p. 63)

To prevent air leakage, seal all ductwork connections, including duct collars using one or more of the following materials:

- Galvanized metal straps in combination with galvanized sheet metal screws.
- For rigid air ducts and connectors, tape and mastics listed to UL 181A.
- For flexible air ducts and connectors, tape and mastics listed to UL 181B.

UNDER FLOOR FLEXIBLE CROSSOVER DUCT

When heating or cooling equipment is installed in the home, the flexible crossover duct is provided by the manufacturer. In all cases the crossover duct must be listed for exterior use and should be wrapped with insulation of at least R-8 under a vapor barrier with a perm rating of not greater than one.

There are four common configurations of under floor crossover ducts depending on the number of home sections and the furnace/air handler location. See **Table 16** to locate the appropriate figure.

TABLE 16. UNDER FLOOR DUCT CONFIGURATIONS

Furnace location	Two home sections	Three home sections
Furnace over trunk duct	See Figure 34	See Figure 34B
Furnace offset from trunk duct	See Figure 34A	See Figure 34C

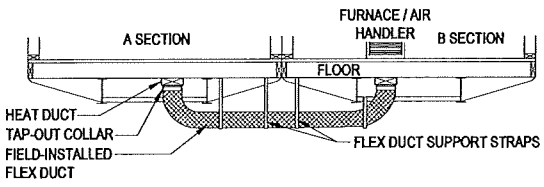

Qualified personnel. Use only qualified personnel to make crossover connections. Consult the LAHJ for licensing or any additional crossover connection requirements.

Access for service. Whenever possible maintain access to connection areas for future maintenance.

Make tight connections. Permanent, durable and tight crossover duct connections are critical to the proper performance of the home. Leaky ducts can result in severe moisture problems in the home, discomfort from rooms not receiving the proper amount of conditioned air and high utility bills from wasted heating and/or cooling energy.

Figure 34. *Furnace over trunk duct, two home sections*

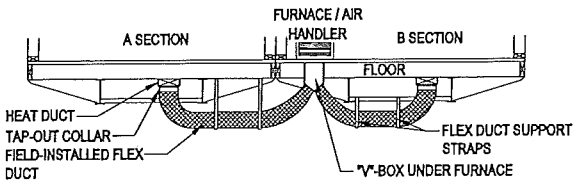

Figure 34A. *Furnace offset from trunk duct, two home sections*

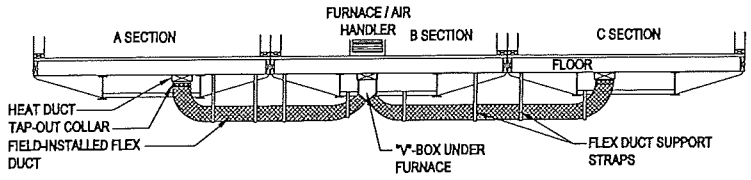

Figure 34B. *Furnace over trunk duct, three home sections*

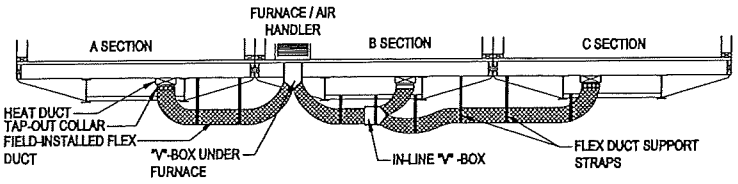

Figure 34C. *Furnace offset from trunk duct, three home section*

For under floor flexible crossover ducts follow the steps below:

1. **Locate collars.** Locate the metal crossover collars (or V-box) connected to the main trunk duct (or furnace) under the home and remove temporary shipping protection.
2. **Install inner duct.** Apply mastic completely over inner liner and collar/V-box. Slide the crossover duct inner liner over the crossover collar/V-box as far as it will go. Install a large nylon zip tie over the inner liner just above the "ridge" around the crossover collar/V-box. Apply mastic completely over inner liner and collar/V-box.
3. **Connect duct insulation.** Bring the duct insulation up over the zip tie and above the home's bottom board into the floor cavity. Temporarily duct tape it against the base of the trunk duct/V-box.
4. **V-box Insulation.** Verify that the V-box has been insulated with R-8 minimum.
5. **Pull duct wrap.** Pull the crossover duct outer wrap over the top of the insulation and temporarily secure it to the trunk duct/V-box with duct tape.
6. **Install zip tie.** Feel for the nylon zip tie that was installed over the inner liner. Place another nylon zip tie just under the first one to permanently secure the crossover duct insulation and outer wrap, making sure all of the insulation is inside the outer wrap.
7. **Trim duct.** Trim the crossover duct to length such that the installed duct will be straight with no kinks or unnecessary bends.
8. **Connect other end.** Follow the same procedure (steps 1 through 5) to connect the opposite end of the crossover duct and any other crossover ducts.
9. **Seal joints.** Seal the joints between the bottom board and the crossover duct with bottom board repair tape.
10. **Support duct.** Support the crossover duct(s) above the ground using nylon or galvanized metal straps and saddles spaced every 48 inches o.c. or less. Choose straps at least 1/2 inch wider than the spacing of the metal spirals encasing the crossover duct. Install the straps so they cannot slip between spirals. Secure metal straps with galvanized screws.

ROOF CAVITY CROSSOVER DUCT

For ducts installed in the roof cavity, follow the steps below:

1. **Access the duct.** Access the crossover location through an access panel in the ceiling or the open sides of the home before the sections are joined and remove any temporary shipping protection.
2. **Join ducts.** Using the provided flexible duct, join the distribution boxes in each section of the home as shown in **Figure 35**, cutting off any extra duct length to keep the duct as straight as possible. The duct must be joined in the center

Securing the crossover. Between Step 5 and Step 6, drill three or more 1/16 inch holes an equal distance around and just below the bottom edge of the nylon zip-tie. Install #12 pan head screws in these holes, through the flexible duct and into the metal crossover collar/V-box. The screw heads should be against the zip-tie.

Cover exposed metal. Completely cover all exposed metal connectors with insulation. Apply sealants and tapes only to surfaces that are dry and free of dust, dirt, and grease.

Avoid ground contact. Installed crossover ducts must not be in contact with the ground.

Unobstructed airflow. Excess length, kinks and bends in the crossover duct will restrict airflow and degrade the home's HVAC system performance.

Compressed Duct. Support the duct without compressing the insulation and re-

with the provided connecter.

3. **Fasten ducts.** At each connection point between ducts and distribution boxes or connectors, secure the inner duct liner with a nylon strap, apply mastic completely over the connection area, pull the duct insulation and outer liner over the connection area and secure them with a second nylon strap.
4. **Reinstall panel.** Reinstall and secure the access panel, if applicable.

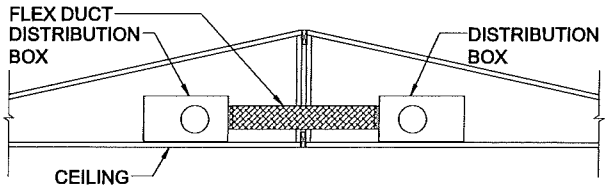

Figure 35. *Duct crossover located in the roof cavity*

IN THE FLOOR CROSSOVER DUCT

Where one or more crossover ducts are built into the home's floor system, connect them either through or under the rim joist depending on the design of the home.

Through the rim joist

With a through the rim joist design, the duct in each floor section terminates at an opening in the marriage line rim joist. Fixed through-the-rim crossovers employing a marriage line gasket such as in **Figure 36** were completed in **Complete Multi-Section Set, STEP 4. REPAIR OR INSTALL MARRIAGE LINE GASKET** (p. 45) and require no additional work here. Connect other through-the-rim joist ducts using one of the following methods based on the design of the home.

Method 1: Metal or Duct board through rim joist without sleeve

Connect ducts that pass through the rim joist (**Figure 36**) as follows:

1. **Align Crossover duct locations.** Verify that when both halves of the home are installed that the crossover duct locations will align properly.
2. **Air tight Seal.** Verify that the gasket or duct board used to seal between both halves of the home is in good condition and will properly seal the duct system.
3. **Connect the Units.** Connect the floors using the procedure for connecting the floors (p. 45).

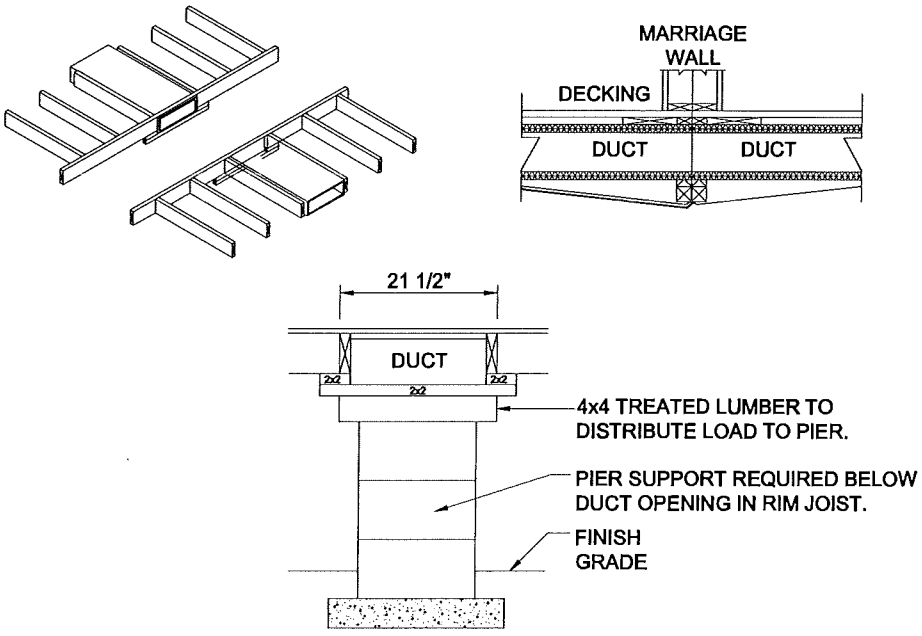

Figure 36. *In-floor duct connection through the rim joist without metal sleeve*

Additional marriage line support. If the duct runs through the marriage line rim joist, a single block perimeter pier is required under the marriage wall at the crossover location unless otherwise noted on the manufacturer's blocking plan or other supplemental documents, or unless the home is constructed with a perimeter support system.

stricting airflow.

Method 2: Duct board with sleeve
Join duct board ducts with a metal sleeve as follows (**Figure 37**):

1. **Open bottom board.** On the section of the home with the furnace, cut the bottom board along the center line of the two floor joists on either side of the cross over duct starting at the marriage line and extending approximately three feet toward the center of the section.
2. **Open duct.** Create an opening in the duct by cutting the duct board as shown in **Figure 37**.
3. **Insert sleeve.** Insert the provided metal sleeve, centering it on the marriage line joint.
4. **Seal duct.** Close the bottom of the duct and seal it with tape specially made for that purpose (may be provided).
5. **Seal floor.** Replace the floor insulation to its original position and seal the bottom board tightly with tape specially made for that purpose.

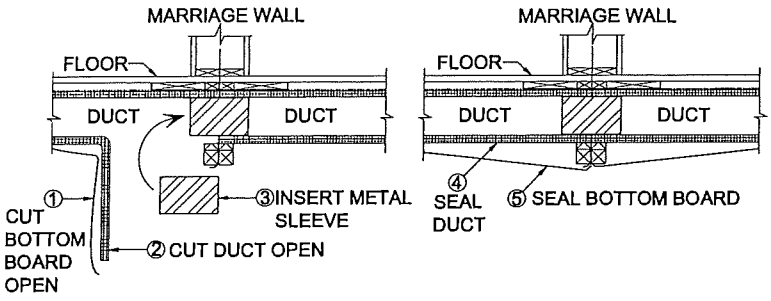

Figure 37. *In-floor duct with crossover using metal sleeve*

STEP 2. CONNECT ELECTRICAL CROSSOVERS

Multi-section homes may have one or more electrical crossovers located in the wall(s) and/or floor(s) along the marriage line(s).

JOINING WIRES

Two types of connections may be present at these locations—snap connectors and junction boxes. Identify matching circuits if multiple circuits exist at a single crossover location. These will be coded for identification. Connect snap connectors according to the connector manufacturer's installation instructions, including fastener requirements.

Connect wires in junction boxes as follows (**Figure 38**):

Pull wires. Pull circuit wires into the junction box, sliding them through a romex connector and secure snugly. (**Figure 38**) Do not over-tighten.

1. **Strip wires.** Remove the outer jacket that holds the circuit wires together providing a minimum of four inches of free wire in the box.
2. **Connect wires.** Connect wires together matching like colors, using appropriately sized wire nuts. Use the ground wire to ground the junction box and/or cover plate(s), if metal. Junction boxes may contain single or multiple 15 or 20 amp circuits, or a single 240 volt appliance circuit.
3. **Replace cover.** Reposition the junction box cover and secure using machine (not sheet metal) screws.

Use qualified electricians. All electrical work must be performed by a qualified electrician and comply with the 2005 NEC.

Disconnect power. Turn off power to the home before making connections.

Proper use of GFCI circuits. Ensure Ground Fault Circuit Interrupted (GFCI) circuits are connected to the proper GFCI protected circuits from the power supply.

Figure 38. *Types of junction box wiring connections*

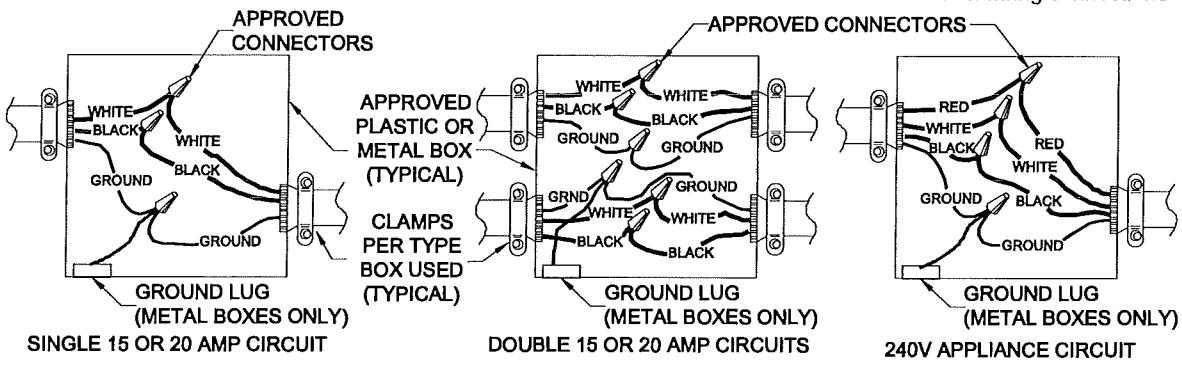

FLOOR CROSSOVER

When making electrical connection(s) in the floor, use one of the wiring options described below:

Method 1: Access panel

1. **Access wires.** Find the crossover location(s) and remove the access panel(s) if attached. If access panel openings are not provided, cut through bottom board to expose the wiring (**Figure 39**).
2. **Route wires.** Pass the wires through predrilled holes or notches in the rim joist or if there is a single bumped-out access panel as in **Figure 40**, then connect under the rim joists.
3. **Connect wires.** Connect wires via a junction box or snap-connector(s) as described above.
4. **Secure wires.** Secure wires with staples to adjacent joists or studs within eight inches of junction box or snap-connector(s).
5. **Install smash plates.** For notched perimeter joists, install steel wire protectors (smash plates).
6. **Seal bottom board.** Replace insulation and re-install access panels and/or seal the bottom board with tape specially made for that purpose (may be provided). The access panel(s) may be temporarily installed near the crossover location or shipped loose with the home.

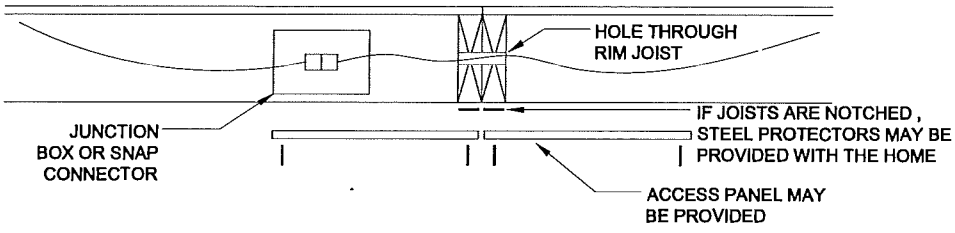

Figure 39. *Electrical crossover floor wires with flush access panels*

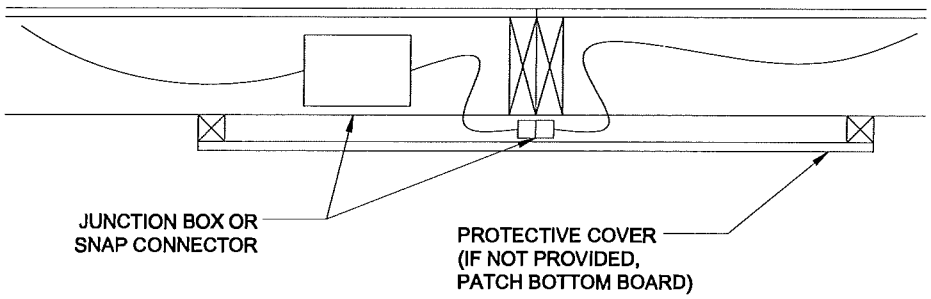

Figure 40. *Floor electrical crossover wires with bumped-out access panel*

Using snap connectors. Do not use oversized nails or drive nail heads into snap connectors. Some connectors are designed for one-time use only – a new connector must be used if they become separated.

Protect cables. Cover all cables with conduit or other suitable weather-resistant and protective material.

Method 2: Junction box with conduit

1. **Access boxes.** If junction boxes are not exposed, access them inside the floor by cutting the bottom board or by removing the access panel(s). Remove the junction box covers.
2. **Connect wires.** If wire is coiled inside one junction box, insert it into flexible conduit and pass it under the rim joists to the opposing box and make the connection as described above. If no coiled wire is provided, install conduit with wire making connections in both boxes (**Figure 40**).
3. **Cover boxes.** Replace and secure covers on junction boxes.
4. **Seal floor.** Replace any displaced insulation and replace access panel or seal the bottom board with tape specially made for that purpose (may be provided).

Variation to Method 2: A junction box may be installed only on one side with the other side containing conduit behind an access panel. Bring the conduit to other side and make one connection in the junction box.

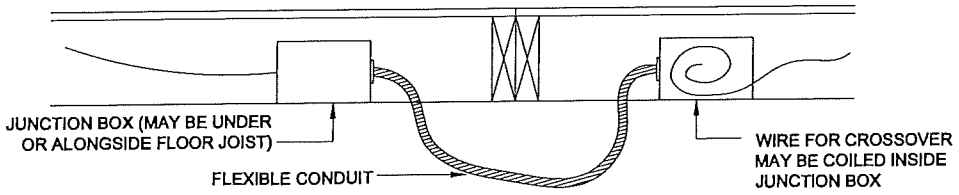

Figure 41. *Under the rim joist electrical crossover connection with conduit*

WALL CROSSOVERS

Connect electrical, phone, cable television and stereo speaker wires in marriage walls and/or partition and end walls.

If access panels into the marriage walls are not provided, then the connection should have been made prior to bringing the home sections together. If access panels are provided in marriage, end or partition walls, remove the panels, join the wires as described above using the provided snap-connector, junction box or at a receptacle, and re-attach the access panel (**Figure 42** for marriage walls and **Figure 43** for partitions and end walls).

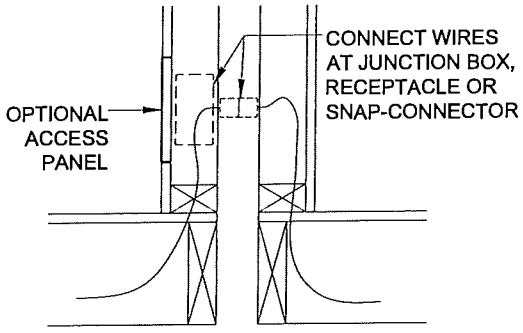

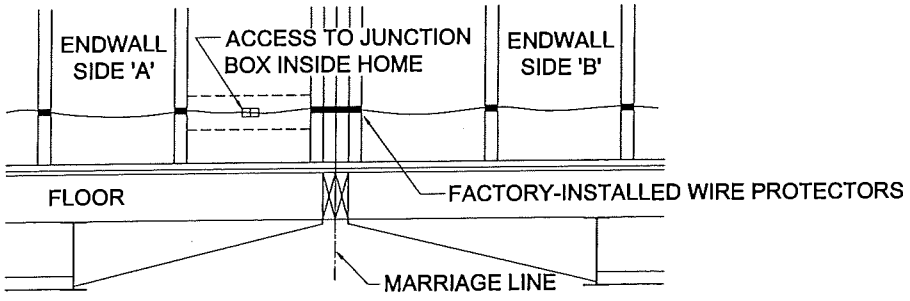

Avoid damaging crossover wires. Carefully fold marriage wall crossover wires so they stay within a single bay and are not sandwiched between studs when the sections are pulled together.

Figure 42. *Inside marriage wall crossover connection*

Figure 43. Inside partition or end wall electrical crossover connection

STEP 3. INSTALL ELECTRICAL BONDING

To ensure all metal parts are effectively grounded, electrically bond all chassis together as follows (**Figure 44**):

1. **Find lugs.** Determine if solderless ground lugs are provided on the front or rear frame outriggers or headers.
2. **Attach wire.** If lugs are provided, uncoil the bonding wire (#8 minimum bare copper wire) from one side of the home and connect it to the lug provided on the opposing side using a paint penetrating star washer, tighten the set screw firmly on the wire and repeat for any additional home sections. Torque the set screw per the manufacturer's requirements.

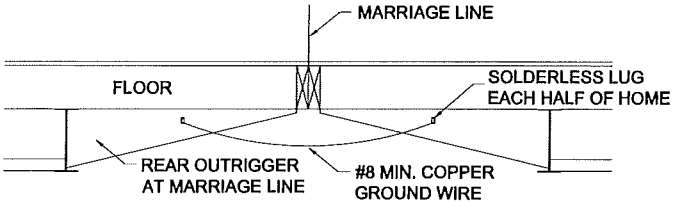

Figure 44. *Electrical bonding of multi-section homes*

3. **Attach strap.** If ground lugs and copper wire are not provided, attach the provided four inch bonding strap to each pair of adjacent chasses with two #8 x 3/4" self-tapping metal screws (one screw each side).

STEP 4. CONNECT WATER LINES

Connect water lines inside the floor through access panels or below the bottom board as follows:

WATER LINES ACCESSED THROUGH PANELS

1. **Remove panels.** Remove access panels from each home section.
2. **Remove caps.** Remove shipping caps from ends of water lines, if present.
3. **Pull lines.** Pull water lines through holes in rim joist or attach shipped loose flex connectors, if applicable (**Figure 45**).
4. **Connect pipes.** Connect threaded water lines using flexible pipe or a rigid connector line (if provided) and connector fittings (do not use lubricants or sealants).
5. **Test.** Test connections for leaks.
6. **Seal floor.** Securely replace insulation and access panels.

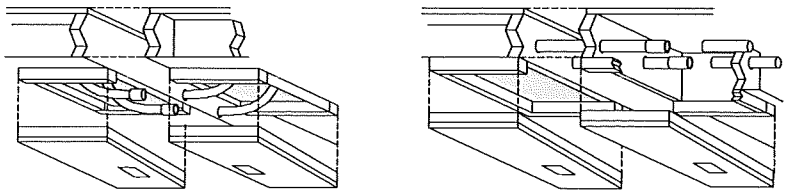

Figure 45. *Water line crossover with access panels*

Applying cement. Follow cement manufacturer's instructions with respect to application and drying time. Allow cement to fully cure before filling pipes with water.

Choosing cement type. Use the proper cement for water lines as it may differ from the cement used for the DWV system.

WATER LINES DROPPED BELOW BOTTOM BOARD

1. **Remove caps.** Remove protective shipping caps from ends of pipes and make sure pipe ends are clean and smooth.
2. **Connect pipes.** Connect threaded water lines using flexible pipe or a rigid connector line (if provided) and connector fittings (do not use lubricants or sealants) (**Figure 46**).
3. **Test.** Test connections for leaks.
4. **Protect pipes.** Wrap water lines with insulation and bottom board shipped loose with home or otherwise protect to prevent freezing. Tape bottom board using tape specially made for that purpose (may be provided) and staple with 7/16" x 1/2" staples at four inches o.c. around bottom board using a divergent (stitch) stapler or equivalent. Generally, only insulation is necessary to protect water supply lines from freezing when the home is skirted. Some homeowners may desire to protect their water supply lines with a heat tape. This tape must be approved for manufactured home use by a nationally recognized testing agency and be installed in compliance with manufacturer's instructions. An electrical outlet has been provided under the home for the heat tape. This outlet is not protected by a Ground Fault Circuit Interrupter and should not be used for any other purpose.

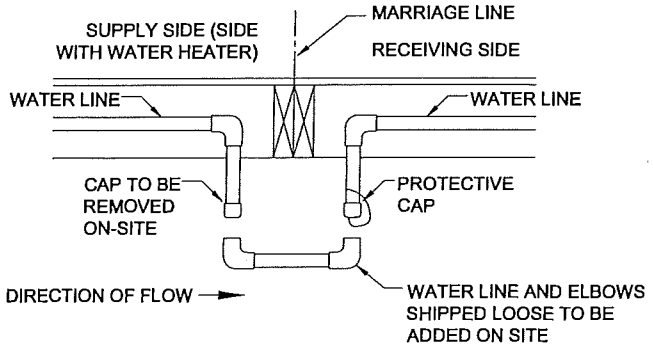

Figure 46. *Water line crossover through bottom board*

STEP 5. CONNECT DRAIN, WASTE AND VENT LINES

Complete portions of the drain, waste and vent (DWV) system that are below the floor as follows:

1. **Remove caps.** Remove shipping covers from pipes extending through the bottom board; inspect pipes and fittings and clean them of dirt, obstructions and burrs.
2. **Assemble pipes.** Using the drain schematic drawing provided with the home, begin assembling the DWV system starting at the location farthest from the sewer/septic connection and working towards the outlet, fastening the pipe with cement or adjustable screw-clamp connectors, if provided (**Figure 47**). As the system is assembled, support the piping with temporary blocking. Unless otherwise noted on the schematic diagram, provide a minimum 1/4 inch per foot slope towards the sewer/septic using a plumber's level. Where a slope of 1/4 inch per foot cannot be maintained, use a minimum slope of 1/8 inch per foot and install of a full-size clean-out at the uppermost point of the run (**Figure 48**).

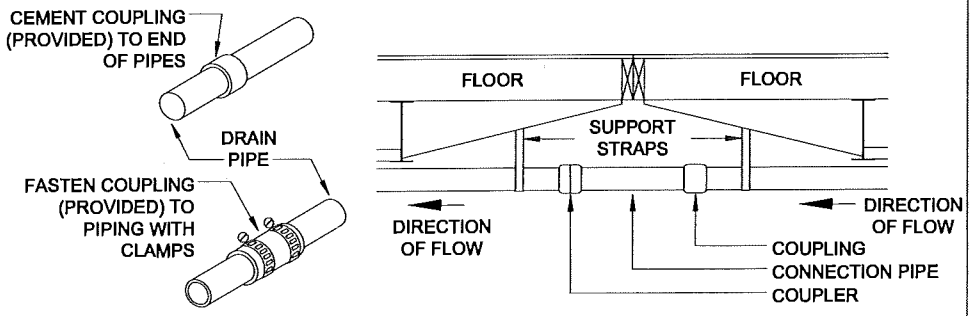

Figure 47. *Drain crossover connection*

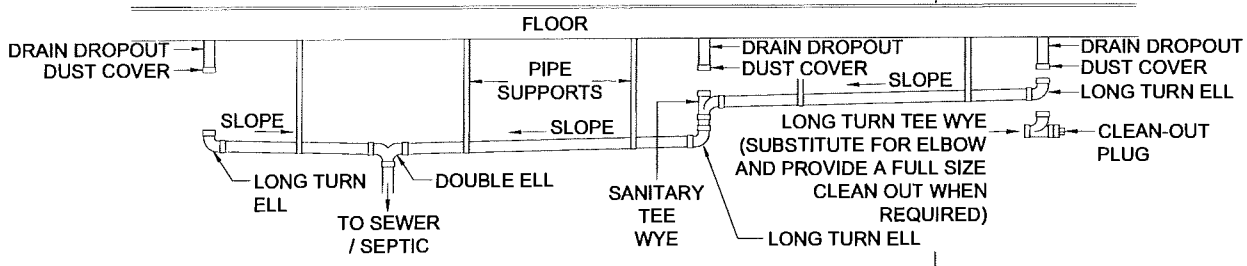

Figure 48. *DWV system*

3. **Test.** After all drain lines have been connected, conduct a two-part leakage test on the completed drainage system as follows:
   - Part 1. With all fixtures connected, and all tub and shower drains plugged, fill the system with water to the rim of the toilet bowl through a higher fixture. Release all trapped air, replace tub and shower plugs, backfill fixtures, and allow the system to stand at least 15 minutes. Check for leaks. Drain the system. If leaks are found, repair and retest.
   - Part 2. Plug all fixtures, sinks, showers, and tubs and fill with water. Release the water in all fixtures simultaneously to obtain the maximum possible drain piping flow. As water is draining, check for leaks. If any are found, repair and retest.
4. **Connect to outlet.** Connect the main drain line to the site sewer/septic hookup, using an approved elastomer coupling (**Figure 49**).

Providing required clearances. Provide the drain outlet with a minimum clearance of three inches in any direction from all parts of the structure or any appurtenances and with not less than 18 inches unrestricted clearance directly in front of the drain outlet. Provide any cleanouts with a minimum clearance of 12 inches directly in front of its opening.

Choosing glues. Use only solvents and glues compatible with the pipe (ABS or PVC). Follow manufacturer's instructions.

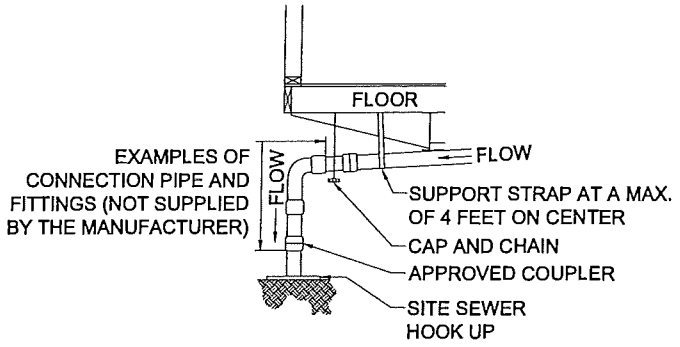

Figure 49. *DWV connection to sewer/septic*

5. **Install supports.** Install permanent drain line supports at a distance of four feet o.c. or less (see **Figure 50**). Alternate DWV pipe support may be used if approved by the local authority having jurisdiction.

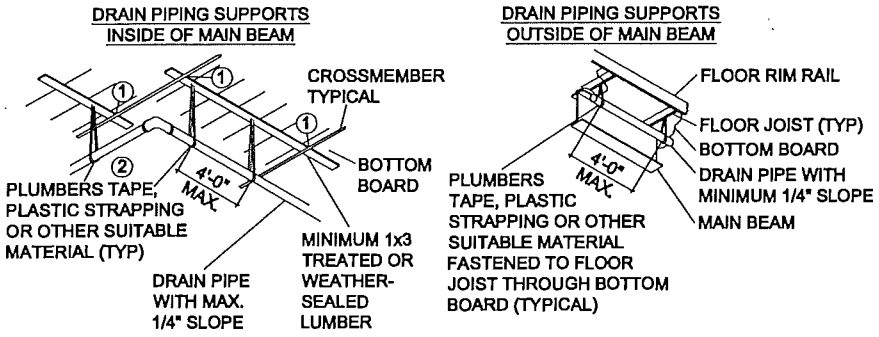

PROCEDURE:
1) ADD MINIMUM 1x3 LUMBER BETWEEN FRAME CROSSMEMBERS DIRECTLY ABOVE DRAIN PIPING BY PUSHING UP ON THE BOTTOM BOARD AND RESTING THE LUMBER ON TOP OR INSIDE OF THE CROSSMEMBER LEG AS SHOWN.
2) WRAP SUPPORT STRAPPING AROUND PIPING AND 1x FRAMING MATERIAL. FASTEN STRAPPING TO SUPPORT AS SHOWN BELOW.
3) OTHER METHODS TO PROVIDE SUPPORT MAY BE USED TO MAINTAIN MIN. PIPE SLOPE REQUIREMENTS WITH THE APPROVAL OF THE LOCAL AUTHORITY HAVING JURISDICTION.
4) LUMBER MATERIAL TO BE PROTECTED FROM MOISTURE.
CAUTION
ELECTRICAL WIRING MAY BE SECURED TO WIDE FACE OF FLOOR JOISTS THAT ARE OUTSIDE OF THE MAIN BEAM. MAKE SURE FASTENERS SECURING STRAPPING PENETRATE BOTTOM EDGE OF JOISTS TO ELIMINATE POSSIBLE ELECTRICAL SHORTS.

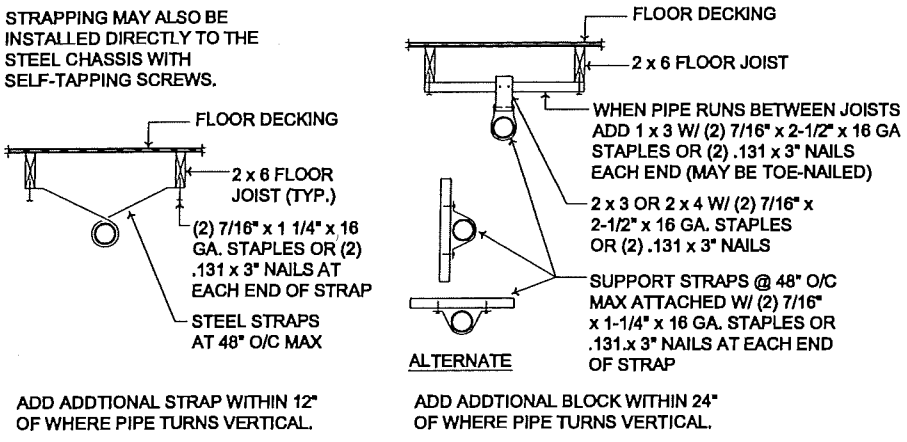

6. **Insulate.** Replace all insulation and repair any tears or openings in bottom board.

Figure 50. *DWV pipe support options*

Protect pipes from freezing. If the home is to be left unheated in cold weather, pour antifreeze solution into all drain traps, including sinks, tubs and toilets. Be sure that the antifreeze is safe for the fixtures and P-traps.

Installing quick disconnect fittings. Do not use tools, lubricants or sealants with quick disconnect fittings.

Gas test precautions. Do not connect to gas service until tests described in Connect Utilities have been successfully completed.

STEP 6. CONNECT GAS LINES

The gas crossover connection may use quick disconnect fittings or threaded connectors. Find the connection location below the floor at the marriage line and gather the connectors (they may be shipped loose if not present under the home).

For quick disconnect fittings (**Figure 51**), remove any dust caps and then with one hand, pull back on the quick disconnect device, snap it over the quick disconnect adaptor and release it to complete the connection.

For threaded connectors, remove the black cap and nipple (or any other plugs, such as a black iron plug) from both the supply and receiving sides and screw the connector onto the supply and return pipes as necessary.

Check for leaks before connecting to gas service (see **Connect Utilities, STEP 3. CONNECT GAS SERVICE,** p. 100).

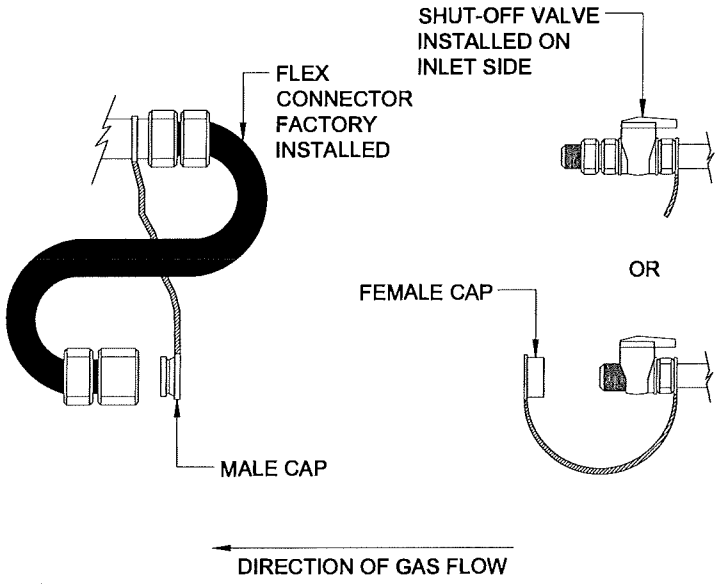

Figure 51. *Gas crossover connection*

Gas Crossover. A quick disconnect may be installed on the gas line crossover, but it may not replace the shut-off valve. A shut-off valve is required on the inlet side of the gas line crossover.

STEP 7. CONNECT TELEPHONE AND CABLE TV WIRING

Install telephone and cable television wiring in accordance with the requirements of the LAHJ, the NEC and NFPA No.70-2005. When making crossover connections or installing telephone or cable television wires, do not run them in the same raceway as, or in close proximity to, high voltage electrical conductors or cables.

Wires should only be installed by trained professionals.

Installing wiring. When installing telephone and cable television wires, do not damage electrical wires, plumbing lines or ducts. Serious personal injury or death could result from damage to electrical wires.

▶ go to **Complete the Interior** (p. 72)

Complete the Interior

This chapter covers the completion of the home's interior finishes including finishing walls, ceilings, flooring, trim and miscellaneous items.

Follow the Steps below:

- STEP 1. ALIGN MARRIAGE WALLS (p. 72)
- STEP 2. FINISH GYPSUM BOARD (p. 72)
- STEP 3. COMPLETE CARPET (p. 72)
- STEP 4. COMPLETE TRIM (p. 73)
- STEP 5. INSTALL SHIP LOOSE ITEMS (p. 73)

STEP 1. ALIGN MARRIAGE WALLS

Align and secure walls at marriage line openings as follows:

1. **Align walls.** Align walls and clamp in place.
2. **Fasten walls.** Secure clamped walls together with metal straps or long screws so they do not move when the clamps are removed. Insert wood wedges in gaps between walls, and glue and screw to create a tight connection.
3. **Fill gaps.** Fill any remaining gaps with wood or sheathing material.

Does the home require patching and finishing gypsum board walls or ceilings?

- YES, go to STEP 2. FINISH GYPSUM BOARD (p. 72)
- NO, go to STEP 3. COMPLETE CARPET (p. 72)

STEP 2. FINISH GYPSUM BOARD

Finish all unfinished gypsum board walls and ceilings as follows:

1. **Install panels.** Install ship loose gypsum panels using a 1/4 inch diameter bead of polyvinyl acetate (PVA) adhesive on all framing members and minimum 1-1/2 inch long drywall screws, nails or staples at six inches o.c. along panel edges and 12 inches o.c. in the field into framing members.
2. **Mud seams.** Mud and tape all seams and corners, filling all fastener depressions. Follow mud manufacturer's directions.
3. **Paint.** When the final coat of mud is dry, sand, prime and paint all unfinished gypsum board to match existing paint color and finish texture.

Fastening gypsum. When attaching gypsum board, depress, but do not break the paper face with the fastener. Breaking the paper will weaken the connection.

Using alternative materials. Obtain the home manufacturer's approval before using interior finish materials other than those provided with the home.

STEP 3. COMPLETE CARPET

Install and seam ship loose or rolled carpet as follows:

1. **Prepare floor.** Clean the floor of all dirt and debris and smooth the floor deck at the marriage line seams as necessary to ensure a level and smooth surface.
2. **Lay pad.** Lay down the carpet pad, if provided. Seal seams with pad tape. Staple pad to floor about 6 inches from the seam.
3. **Preparing carpet for cutting.** Do not release stay nails. Let the carpet sec-

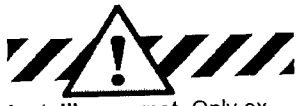

Installing carpet. Only experienced carpet installers should install carpet. Failure to follow the carpet manufacturer's directions

tions overlap. Using NON STAINING CHALK, snap a line on the top edge across the length of the seam. Make sure the line overlaps both sides of the carpet.

4. **Making the guide cuts.** Make 1 inch long cuts through BOTH pieces of carpet every 2 feet.
5. **Making the seam cut.** Flip the carpet edges face down. Place a straight edge on the backing lined up with the guide cuts. Cut the carpet along this line. Repeat for each piece of carpet.
6. **Sealing the seam.** Using liquid latex carpet sealer or specifically designed hot glue sticks (for carpet sealing) apply a thin bead of the sealer to the raw edges of both sides of the carpet. Carpet seam sealers contain an ultraviolet marker that glows when exposed to a blacklight.
7. **Starting the seam.** Set the seaming iron to 2 or 3. Center the seaming tape under the pieces of carpet. Place the iron on the seaming tape. Leave it in place until the adhesive softens. When the adhesive has softened the iron will slide easily, but there will be no smoke.
8. **Completing the seam.** Slide the iron until its back edge slightly overlaps the place where its front edge was. Press the edges of the carpet together in the softened adhesive. Roll the Seam Tractor over the section to further press the backing into the adhesive. The Seam Tractor should be of the solid roller type, as a Star Wheeled Tractor can damage the hot carpet fibers. Place the NON-HEAT-CONDUCTIVE (plastic or wood) weight over the completed seam. Check the next section of the seaming tape to see that it has softened. If so, repeat this step until all seams have been completed. Continue moving the weight as you move.
9. **Blending the seam.** Roll the seam tractor slightly across the seam to blend the carpet fibers. Carpet should be cool before tractoring.
10. **Keep scraps.** Retain reasonable size carpet scraps to protect carpet and flooring during move-in.

STEP 4. COMPLETE TRIM

Using fine gauge wire staples or pin nails install ship loose molding and wainscot paneling to finish trimming out ceilings, marriage line walls, front and rear end walls and passageway doors where necessary.

STEP 5. INSTALL SHIP LOOSE ITEMS

Remove all strapping, blocking and packaging from appliances, windows and doors. Install any drapes, mini-blinds, mirrors, door stops, closet shelves and hardware per the product manufacturer's installation instructions.

Proceed based on the foundation type:

- ▶ **Pier and ground anchor,** go to **Install Stabilizing Systems,** (p. 74)
- ▶ **Load bearing perimeter wall,** go to **Connect Utilities** (p. 95).

may void the carpet warranty.

Stagger seams. Stager all seams. For example, locate the carpet pad seam three inches to left of marriage line and the carpet seam three inches to right of marriage line.

Carpet Manufacturers will not warranty their product if carpet seam sealer is not used at the seam.

Install Stabilizing Systems

This chapter covers the design and installation of the stabilizing system which secures the home against lateral and upward forces caused by wind. The system covered here uses earth (or ground) anchors and steel straps connected to the home's longitudinal steel beams and/or exterior walls. Stabilizer plates may also be used to prevent the anchor head from moving laterally in the ground. An anchor, strap and stabilizer plate (if used) together are referred to as a tie down.

Anchors can also be mounted in concrete footings when there is enough concrete mass (weight) to resist the lateral and upward forces. This type of system is not covered in this manual.

Follow the Steps below:

- STEP 1. DETERMINE ANCHOR LOCATIONS (p. 74)
- STEP 2. DETERMINE TIEDOWN CONFIGURATION (p. 89)
- STEP 3. SELECT ANCHORS (p. 89)
- STEP 4. INSTALL ANCHORS (p. 90)
- STEP 5. INSTALL STRAPS (p. 91)
- STEP 6. TIGHTEN AND ADJUST STRAPS (p. 94)

STEP 1. DETERMINE ANCHOR LOCATIONS

Create a sketch of the home plan showing the exterior walls, marriage line(s) (if any) and frame I-beams (this will be similar to the base sketch created in **Install Footings**, page 20).

See **Table 17** for a list of anchor locations, types and where they are required. Page numbers where the requirements are provided are noted in the last column.

As each anchor location is determined, mark it on the sketch, noting important dimensions such as spacing between anchors. When complete, this will be the home's tie down plan **Figure 52** and **Figure 53**.

TABLE 17. ANCHOR LOCATION TYPES

Location	Type	Wind Zone I	Wind Zones II and III	See page
Sidewall	Frame	Yes	Yes	75
	Vertical	No	Yes	87
Longitudinal	Frame	Yes	Yes	87
	Vertical	No	No	-
Marriage line	Vertical	No	Yes	89
Tag Unit	Frame	Yes	Yes	89
	Vertical	No	Yes	-
Porch Post	Vertical	Yes	Yes	89
Offset Unit		Yes	Yes	89

[1] Install marriage line anchors prior to moving the home over the top of the anchor locations and then return to Set the Home or Complete Multi Section Set respectively.

Need for a stabilizing system. The home must be secured against the wind by the use of an anchor assembly or an alternative foundation system. Where site or other conditions prohibit the use of the manufacturer's instructions, a registered engineer or registered architect must design the stabilizing system. Alternate foundation designs must be approved by the manufacturer and DAPIA. The Alternate Foundation Approval form (**Appendix A**) must be completed and submitted with the proposed foundation design.

Figure 52 and **Figure 53** illustrate typical anchor locations for a double section home in Wind Zone I and Wind Zones II and III respectively.

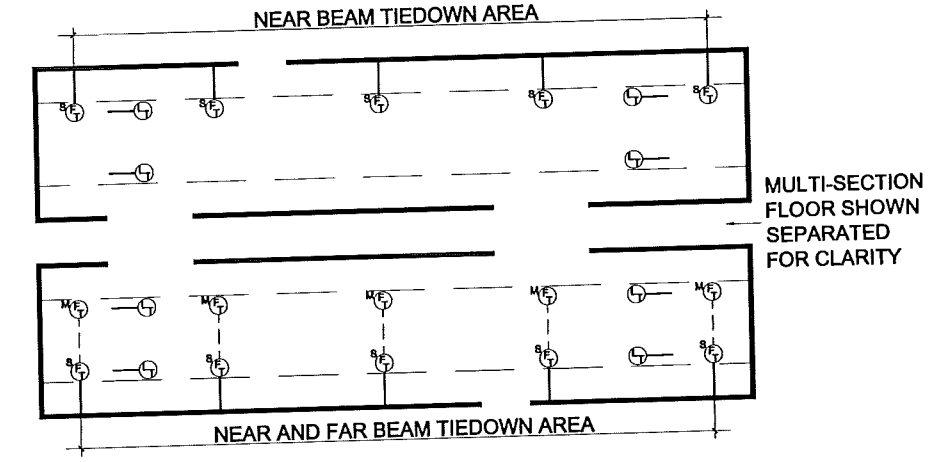

FRAME TIEDOWNS MAY BE SECURED TO BOTH NEAR AND FAR BEAMS (WIND ZONE 1 ONLY) OR EITHER NEAR OR FAR BEAMS (WIND ZONE 2 AND 3) AS REQUIRED BY TABLES 18, 19 AND 20.

Flood and seismic forces. The stabilizing system requirements in this chapter do not consider flood or seismic loads and are not intended for use in flood or seismic hazard areas. In those areas a registered engineer or registered architect must design the stabilizing system. Alternate foundation designs must be approved by the manufacturer and DAPIA. The Alternate Foundation Approval form (**Appendix A**) must be completed and submitted with the proposed foundation design.

Figure 52. *Typical anchor locations for a double section home in Wind Zone I*

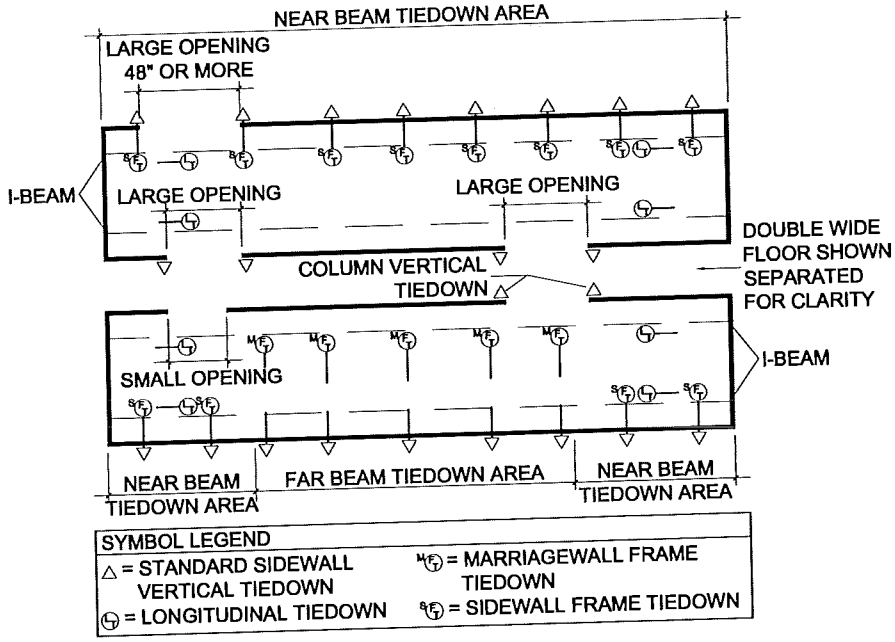

Figure 53. *Typical anchor locations for a double section home in Wind Zones II or III*

SIDEWALL FRAME ANCHORS

Use **Tables 18, 19 and 20** to determine the spacing between anchors for Wind Zones I, II and III, respectively. Spacing requirements will vary depending on the type of home (single or multi-section), the slope of the roof, the width of the floor for each section, the sidewall height, I-beam spacing and the height from the ground to the strap attachment point. Determine the values for the home. Using the table for the appropriate wind zone, determine the column and row that corresponds to the characteristics of the home. The value on the tables is the maximum distance between anchors. **Keep in mind that sidewall frame tie downs must be located no more than two feet from each end of home.**

Maximum spacing requirements. The LAHJ may have anchor spacing requirements that supercede the values provided in this manual.

FRAME TIEDOWN SPACING

	Wind Zone 1 Tiedown Spacing	Page No.
Table 18	Single Section Roof Pitch 4.36/12 Max.	78
Table 18a	Multi Section Roof Pitch 4.36/12 Max.	78
Table 18b	Triple Secton Roof Pitch 4.36/12 Max.	79
	Wind Zone 1 Tiedown Spacing – High Pitch Truss	
Table 18c	Multi Section Roof Pitch 5/12 Max.	79
Table 18d	Triple Section Roof Pitch 5/12 Max.	80
Table 18e	Multi Section Roof Pitch 6/12 Max.	80
Table 18f	Triple Section Roof Pitch 6/12 Max.	80
Table 18g	Multi Section Roof Pitch 7/12 Max.	81
Table 18h	Triple Section Roof Pitch 7/12 Max.	81
	Wind Zone 2 Near I-Beam Tiedown Spacing	
Table 19	Single Section Roof Pitch 4.36/12 Max.	82
Table 19a	Multi Section Roof Pitch 4.36/12 Max.	82
	Wind Zone 2 Far I-Beam Tiedown Spacing	
Table 19b	Single Section Roof Pitch 4.36/12 Max.	83
Table 19c	Multi Section Roof Pitch 4.36/12 Max.	83
	Wind Zone 2 Near I-Beam Tiedown Spacing – High Pitch Truss	
Table 19d	Multi Section Roof Pitch 5/12 Max.	84
	Wind Zone 2 Far I-Beam Tiedown Spacing – High Pitch Truss	
Table 19e	Multi Section Roof Pitch 5/12 Max.	84
Table 19f	Multi Section Roof Pitch 6/12 Max.	84
Table 19g	Multi Section Roof Pitch 7/12 Max.	85
	Wind Zone 3 Near I-Beam Tiedown Spacing	
Table 20	Single Section Roof Pitch 4.36/12 Max.	85
Table 20a	Multi Section Roof Pitch 4.36/12 Max.	85
	Wind Zone 3 Far I-Beam Tiedown Spacing	
Table 20b	Single Section Roof Pitch 4.36/12 Max.	86
Table 20c	Multi Section Roof Pitch 4.36/12 Max.	86

TIEDOWN LIMITATIONS AND SPECIFICATIONS

- Anchors shall be certified for site conditions including soil type for design capacity of 3150 lbs. with resistant pull load applied at a minimum 30 degree angle from horizontal.
- Anchors may be inset from the edge of the sidewall 6" maximum for a near beam set and 10" minimum for a far beam set.
- The floor widths listed in the following charts include the following ranges of widths:
  - 10 Wide = 120"
  - 12 Wide = 136" – 144"
  - 14 Wide = 156" – 168"
  - 16 Wide = 180" – 190"
  - 18 Wide = 204" – 210"
  - 20 Wide = 120"
  - 24 Wide = 136" – 144"
  - 28 Wide = 156" – 168"
  - 32 Wide = 178" – 186"
- The maximum overhang allowed for a single section is 6" and the maximum overhang allowed for a multi section is 24".
- The following frame tiedown charts list the maximum floor height measured from the top of the grade to the connection point of the tiedown strap to the I-beam. Cross reference the maximum allowable pier height (Table 9 and Table 12) with maximum allowable floor height listed in the frame tiedown charts. If maximum height listed in frame tiedown charts is exceeded then designs must be provided by a registered professional engineer or registered architect.
- **Contact the manufacturer if the home you are attempting to set has a floor width, I-beam spacing, wall height or roof pitch that is not shown in any of the following charts (or listed as NA).**
- The " * " listed after any tiedown spacing signifies that a 60 degree angle has been exceeded and an additional strap must be added to the far beam.
- Verify that the anchor spacing required in the following charts is greater than the minimum allowable spacing of the type of anchor installed. Verify that sidewall vertical tiedown bracket spacing meets the requirements for Wind Zone 2 & 3 homes. Bracket spacing may be increased or additional brackets may be added as required.

Figures 54

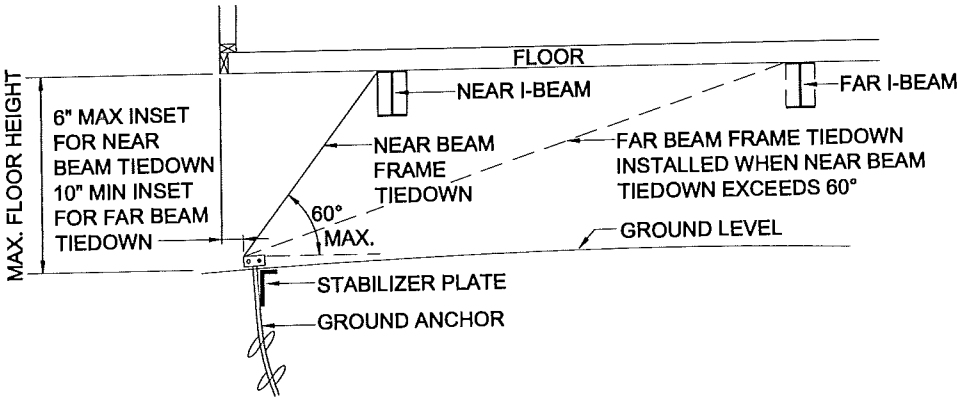

Wind Zone 1 Frame Tiedown: When the angle of the near beam frame tiedown strap exceeds 60 degrees the far beam frame tie-down strap is installed in addition to the near beam strap.

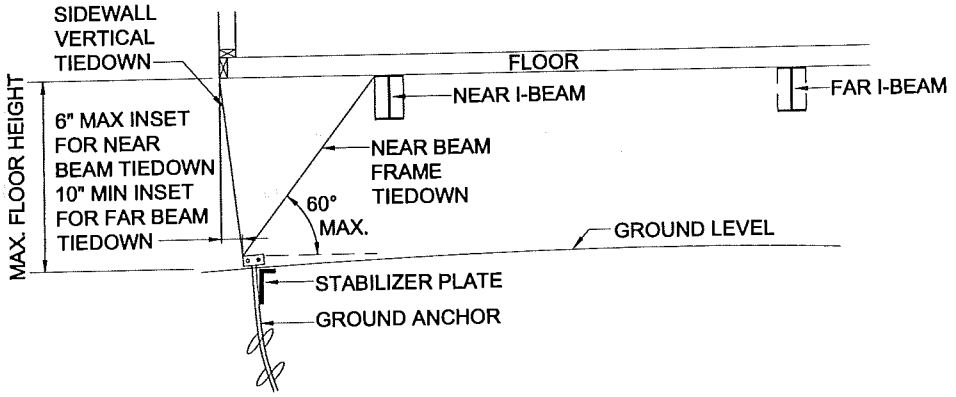

Wind Zone 2 & 3 Near Beam Frame Tiedown
When the angle of the near beam frame tiedown strap exceeds 60 degrees the tiedown strap must be installed to the far beam frame as shown below.

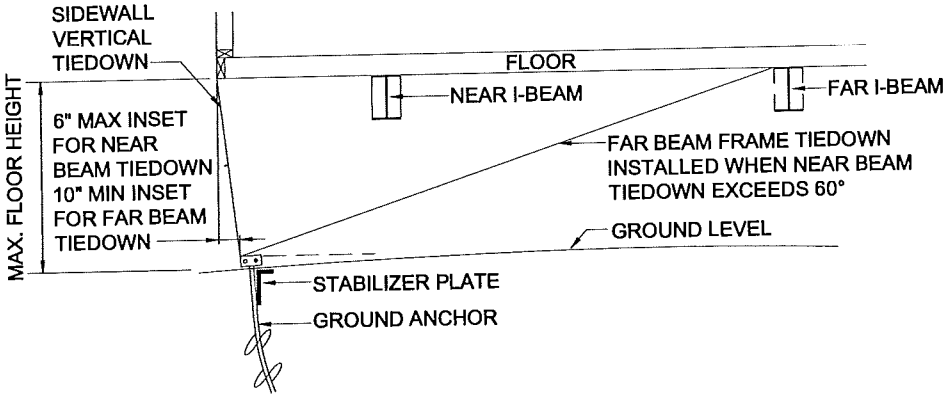

Wind Zone 2 & 3 Far Beam Frame Tiedown

TABLE 18. SINGLE SECTION - WIND ZONE 1 FRAME TIEDOWN SPACING (FT) - MAX. ROOF PITCH 4.36/12

Max. Wall Height	Max. Floor Height	10 ft Max. Width I-Beam Spacing		12 ft Max. Width I-Beam Spacing		14 ft Max. Width I-Beam Spacing			16 ft Max. Width I-Beam Spacing			18 ft Max. Width I-Beam Spacing
		95.5"	99.5"	95.5"	99.5"	95.5"	99.5"	112"	95.5"	99.5"	112"	99.5"
7 ft	25"	6'-0"*	4'-0"*	12'-6"*	11'-0"*	12'-0"	12'-0"	12'-0"	12'-0"	12'-0"	12'-0"	12'-0"
	48"	NA	NA	7'-0"*	6'-0"	11'-8"*	11'-0"*	8'-4"*	12'-0"	12'-0"	12'-0"	12'-0"
	67"	NA	NA	NA	NA	6'-0"*	5'-6"*	4'-0"*	8'-4"*	8'-0"*	6'-8"*	9'-8"
	80"	NA	NA	NA	NA	5'-0"*	4'-8"*	NA	7'-0"*	6'-8"*	5'-8"*	8'-8"
8 ft	25"	5'-0"*	NA	10'-9"*	9'-5"*	6'-4"	12'-0"	12'-0"*	12'-0"	12'-0"	12'-0"	12'-0"
	48"	NA	NA	6'-0"*	5'-4"*	10'-0"*	9'-4"*	7'-0"*	12'-0"	12'-0"	12'-0"	12'-0"
	67"	NA	NA	NA	NA	5'-0"*	5'-0"*	NA	7'-4"*	7'-0"*	6'-0"*	8'-8"
	80"	NA	NA	NA	NA	4'-6"*	4'-6"*	NA	6'-4"*	6'-4"*	5'-6"*	8'-0"
9 ft	25"	4'-4"*	NA	9'-0"*	8'-0"*	7'-0"	12'-0"	12'-0"*	12'-0"	12'-0"	12'-0"	11'-8"
	48"	NA	NA	5'-4"*	4'-6"	8'-8"*	8'-0"*	6'-0"*	11'-8"	11'-6"	10'-0"	12'-0"
	67"	NA	NA	NA	NA	4'-8"*	4'-4"*	NA	6'-8"*	6'-4"*	5'-4"*	7'-8"
	80"	NA	NA	NA	NA	4'-0"*	4'-0"*	NA	5'-8"*	5'-8"*	4'-8"	7'-4"
10 ft	25"	NA	NA	8'-0"*	7'-0"*	8'-0"	11'-0"	11'-4"*	11'-0"	11'-4"	12'-0"	9'-6"
	48"	NA	NA	4'-8"*	4'-0"*	7'-6"*	7'-0"*	5'-4"	10'-6"	10'-0"	8'-8"	12'-0"
	67"	NA	NA	NA	NA	4'-4"*	4'-0"*	NA	6'-0"*	5'-8"*	5'-0"*	7'-0"
	80"	NA	NA	NA	NA	NA	NA	NA	5'-0"*	5'-0"*	4'-6"*	6'-8"

TABLE 18a. MULTI SECTION - WIND ZONE 1 FRAME TIEDOWN SPACING (FT) - MAX. ROOF PITCH 4.36/12

Max. Wall Height	Max. Floor Height	20 ft Max. Width I-Beam Spacing		24 ft Max. Width I-Beam Spacing			28 ft Max. Width I-Beam Spacing		32 ft Max. Width I-Beam Spacing	
		79.5"	95.5"-99.5"	79.5"	95.5"-99.5"	112"	95.5"-99.5"	112"	95.5"-99.5"	112"
7 ft	25"	12'-0"*	12'-0"*	12'-0"	12'-0"	12'-0"*	12'-0"	12'-0"	12'-0"	12'-0"
	48"	12'-0"*	12'-0"*	12'-0"*	12'-0"*	12'-0"*	12'-0"*	12'-0"*	12'-0"	12'-0"*
	67"	9'-4"*	9'-6"*	9'-0"*	9'-6"*	9'-8"*	9'-0"*	9'-6"*	9'-0"*	9'-4"*
	80"	9'-0"*	9'-6"*	9'-0"*	9'-4"*	9'-8"*	9'-0"*	9'-4"*	9'-0"*	9'-4"*
8 ft	25"	12'-0"*	12'-0"*	12'-0"	12'-0"*	12'-0"*	12'-0"	12'-0"	12'-0"	12'-0"
	48"	12'-0"*	12'-0"*	12'-0"*	12'-0"*	12'-0"*	12'-0"*	12'-0"*	12'-0"	12'-0"*
	67"	8'-6"*	8'-6"*	9'-8"*	8'-4"*	8'-8"*	8'-0"*	8'-4"*	8'-0"*	8'-0"*
	80"	7'-6"*	8'-6"*	8'-6"*	8'-4"*	8'-6"*	8'-0"*	8'-4"*	8'-0"*	8'-0"*
9 ft	25"	12'-0"*	12'-0"*	12'-0"	12'-0"*	12'-0"*	12'-0"*	12'-0"	12'-0"	12'-0"
	48"	12'-0"*	12'-0"*	12'-0"*	12'-0"*	12'-0"*	12'-0"*	12'-0"*	12'-0"	12'-0"*
	67"	7'-8"*	7'-0"*	8'-8"*	8'-4"*	7'-8"*	9'-4"*	9'-0"*	10'-0"*	10'-0"*
	80"	6'-8"*	6'-0"*	7'-8"*	7'-0"*	6'-8"*	8'-4"*	8'-0"*	9'-4"*	9'-0"*
10 ft	25"	12'-0"*	12'-0"*	12'-0"	12'-0"*	12'-0"*	12'-0"*	12'-0"	12'-0"	12'-0"
	48"	12'-0"*	12'-0"*	12'-0"*	12'-0"*	12'-0"*	12'-0"*	12'-0"*	12'-0"	12'-0"*
	67"	7'-0"*	6'-4"*	7'-8"*	7'-6"*	7'-0"*	8'-6"*	8'-4"*	9'-4"*	9'-0"*
	80"	6'-0"*	5'-8"*	7'-0"*	6'-6"*	6'-4"*	7'-8"*	7'-4"*	8'-6"*	8'-4"*

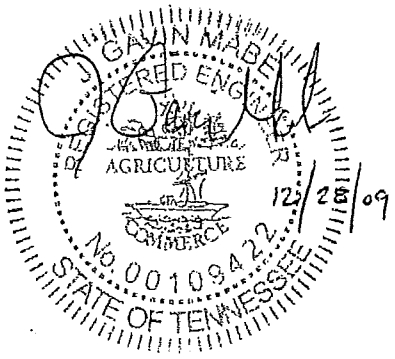

TABLE 18b. MULTI SECTION - WIND ZONE 1 FRAME TIEDOWN SPACING (FT) - MAX. ROOF PITCH 4.36/12

Max. Wall Height	Max. Floor Height	36 ft Max. Width I-Beam Spacing 95.5"-99.5"	42 ft Max. Width I-Beam Spacing 95.5"-99.5"	48 ft Max. Width I-Beam Spacing 95.5"-99.5"
7 ft	25"	12'-0"*	12'-0"	12'-0"
	48"	12'-0"*	12'-0"*	12'-0"
	67"	9'-4"*	9'-0"*	9'-0"*
	80"	9'-4"*	9'-0"*	9'-0"*
8 ft	25"	12'-0"*	12'-0"	12'-0"
	48"	12'-0"*	12'-0"*	12'-0"
	67"	8'-4"*	8'-0"*	7'-8"*
	80"	8'-4"*	8'-0"*	8'-0"*
9 ft	25"	12'-0"*	12'-0"	12'-0"
	48"	12'-0"*	12'-0"*	12'-0"
	67"	7'-6"*	7'-4"*	7'-4"*
	80"	7'-6"*	7'-4"*	7'-4"*
10 ft	25"	12'-0"*	12'-0"*	12'-0"
	48"	12'-0"*	12'-0"*	12'-0"
	67"	6'-8"*	6'-8"*	6'-8"*
	80"	6'-8"*	6'-8"*	6'-8"*

TABLE 18c. MULTI SECTION - WIND ZONE 1 FRAME TIEDOWN SPACING (FT) - MAX. ROOF PITCH 5/12

Max. Wall Height	Max. Floor Height	20 ft Max. Width I-Beam Spacing		24 ft Max. Width I-Beam Spacing			28 ft Max. Width I-Beam Spacing		32 ft Max. Width I-Beam Spacing	
		79.5"	95.5"-99.5"	79.5"	95.5"-99.5"	112"	95.5"-99.5"	112"	95.5"-99.5"	112"
8 ft	25"	12'-0"*	12'-0"*	11'-0"	12'-0"*	12'-0"*	10'-4"	8'-0"	11'-8"	11'-4"
	48"	10'-8"*	10'-0"*	11'-6"*	11'-0"*	10'-8"*	11'-8"*	11'-8"*	8'-4"	12'-0"*
	67"	5'-8"*	5'-0"*	6'-0"*	5'-8"*	5'-6"*	6'-4"*	6'-0"*	6'-6"*	6'-6"*
	80"	5'-0"*	4'-6"*	5'-6"*	5'-0"*	4'-8"*	5'-8"*	5'-6"*	6'-0"*	5'-8"*
9 ft	25"	11'-4"*	12'-0"*	10'-0"	11'-0"*	12'-0"*	9'-0"	7'-4"	10'-6"	10'-0"
	48"	9'-8"*	9'-0"*	10'-4"*	10'-0"*	9'-8"*	10'-8"*	10'-6"*	7'-6"	10'-8"*
	67"	5'-4"*	4'-8"*	5'-8"*	5'-6"*	5'-0"*	5'-8"*	5'-8"*	6'-0"*	6'-0"*
	80"	4'-8"*	4'-0"*	5'-0"*	4'-8"*	4'-6"*	5'-4"*	5'-0"*	5'-8"*	5'-6"*
10 ft	25"	9'-0"*	11'-0"*	9'-0"	9'-0"*	9'-8"*	8'-4"	6'-8"	9'-8"	9'-4"
	48"	8'-8"*	8'-4"*	9'-6"*	9'-0"*	8'-8"*	9'-4"*	9'-6"*	6'-8"	10'-0"*
	67"	5'-0"*	4'-6"*	5'-4"*	5'-0"*	4'-8"*	5'-6"*	5'-4"*	5'-8"*	5'-8"*
	80"	4'-4"*	4'-0"*	4'-8"*	4'-6"*	4'-4"*	5'-0"*	4'-8"*	5'-4"*	5'-0"*

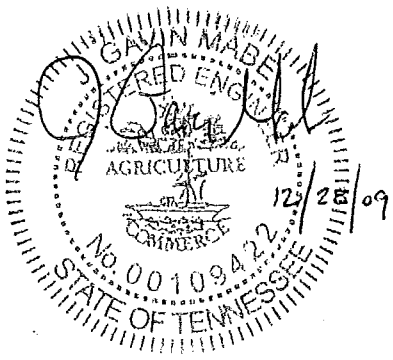

TABLE 18d. MULTI SECTION - WIND ZONE 1 FRAME TIEDOWN SPACING (FT) - MAX. ROOF PITCH 5/12

Max. Wall Height	Max. Floor Height	36 ft Max. Width I-Beam Spacing 95.5"-99.5"	42 ft Max. Width I-Beam Spacing 95.5"-99.5"	48 ft Max. Width I-Beam Spacing 95.5"-99.5"
8 ft	25"	12'-0"*	10'-0"	11'-6"
	48"	11'-8"*	12'-0"*	8'-0"
	67"	5'-4"*	5'-6"*	5'-8"*
	80"	4'-8"*	5'-0"*	5'-0"*
9 ft	25"	12'-0"*	9'-0"	10'-4"
	48"	10'-8"*	11'-0"*	7'-4"
	67"	5'-0"*	5'-4"*	5'-4"*
	80"	4'-6"*	4'-8"*	4'-8"*
10 ft	25"	11'-8"*	8'-0"	9'-6"
	48"	9'-8"*	10'-0"*	6'-8"
	67"	4'-8"*	5'-0"*	5'-0"*
	80"	4'-0"*	4'-6"*	4'-8"*

TABLE 18e. MULTI SECTION - WIND ZONE 1 FRAME TIEDOWN SPACING (FT) - MAX. ROOF PITCH 6/12

Max. Wall Height	Max. Floor Height	20 ft Max. Width I-Beam Spacing 79.5"	20 ft Max. Width I-Beam Spacing 95.5"-99.5"	24 ft Max. Width I-Beam Spacing 79.5"	24 ft Max. Width I-Beam Spacing 95.5"-99.5"	28 ft Max. Width I-Beam Spacing 95.5"-99.5"	32 ft Max. Width I-Beam Spacing 95.5"-99.5"
8 ft	25"	11'-8"*	12'-0"*	10'-0"	11'-4"*	9'-0"	10'-4"
	48"	9'-8"*	9'-4"*	10'-6"*	10'-0"*	10'-8"*	7'-4"
	67"	5'-4"*	4'-4"*	5'-8"*	5'-6"*	5'-8"*	6'-0"*
	80"	4'-8"*	4'-4"*	5'-0"*	4'-8"*	5'-4"*	5'-6"*
9 ft	25"	9'-6"*	11'-0"*	9'-0"	9'-4"*	8'-0"	9'-6"
	48"	9'-0"*	8'-4"*	9'-6"*	9'-0"*	9'-8"*	6'-8"
	67"	5'-0"*	4'-5"*	5'-4"*	5'-0"*	5'-6"*	5'-8"*
	80"	4'-4"*	4'-0"*	4'-8"*	4'-8"*	5'-0"*	5'-0"*
10 ft	25"	7'-8"*	9'-6"*	8'-4"	7'-8"*	7'-6"	8'-8"
	48"	8'-8"*	7'-8"*	8'-8"*	8'-4"*	8'-8"*	6'-0"
	67"	4'-8"*	4'-4"*	5'-0"*	4'-8"*	5'-0"*	5'-6"*
	80"	4'-0"*	NA	4'-6"*	4'-6"*	4'-8"*	5'-0"*

TABLE 18f. MULTI SECTION - WIND ZONE 1 FRAME TIEDOWN SPACING (FT) - MAX. ROOF PITCH 6/12

Max. Wall Height	Max. Floor Height	36 ft Max. Width I-Beam Spacing 95.5"-99.5"	42 ft Max. Width I-Beam Spacing 95.5"-99.5"	48 ft Max. Width I-Beam Spacing 95.5"-99.5"
8 ft	25"	12'-0"*	8'-4"	9'-8"
	48"	10'-0"*	10'-0"*	6'-8"
	67"	4'-8"*	5'-0"*	5'-0"*
	80"	4'-4"*	4'-6"*	4'-8"*
9 ft	25"	11'-0"*	7'-8"	8'-8"
	48"	9'-4"*	9'-6"*	6'-4"
	67"	4'-8"*	4'-8"*	4'-8"*
	80"	4'-0"*	4'-4"*	4'-6"*
10 ft	25"	10'-4"*	7'-0"	8'-0"
	48"	8'-6"*	8'-8"*	5'-8"
	67"	4'-4"*	4'-8"*	4'-8"*
	80"	4'-0"*	4'-0"*	4'-4"*

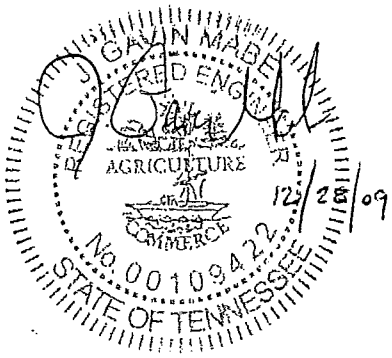

TABLE 18g. MULTI SECTION - WIND ZONE 1 FRAME TIEDOWN SPACING (FT) - MAX. ROOF PITCH 7/12

Max. Wall Height	Max. Floor Height	20 ft Max. Width I-Beam Spacing		24 ft Max. Width I-Beam Spacing		28 ft Max. Width I-Beam Spacing	32 ft Max. Width I-Beam Spacing
		79.5"	95.5"-99.5"	79.5"	95.5"-99.5"	95.5"-99.5"	95.5"-99.5"
8 ft	25"	9'-8"*	11'-4"*	9'-0"	9'-6"*	8'-0"	9'-4"
	48"	9'-0"*	8'-6"*	9'-6"*	9'-0"*	9'-6"*	6'-8"
	67"	5'-0"*	4'-8"*	5'-4"*	5'-0"*	5'-6"*	5'-8"*
	80"	4'-6"*	4'-0"*	4'-8"*	4'-6"*	5'-0"*	5'-0"*
9 ft	25"	8'-0"*	9'-8"*	8'-4"	7'-8"*	7'-6"	8'-6"
	48"	8'-4"*	7'-8"*	8'-8"*	8'-6"*	8'-8"*	6'-0"
	67"	4'-8"*	4'-4"*	5'-0"*	4'-8"*	5'-0"*	5'-4"*
	80"	4'-0"*	NA	4'-6"*	4'-0"*	4'-8"*	4'-8"*
10 ft	25"	6'-8"*	8'-0"*	7'-8"	6'-8"*	7'-0"	8'-0"
	48"	7'-8"*	7'-0"*	8'-0"*	7'-8"*	8'-0"*	5'-8"
	67"	4'-6"*	4'-0"*	4'-8"*	4'-6"*	4'-8"*	5'-0"*
	80"	NA	NA	4'-4"*	4'-0"*	4'-4"*	4'-8"*

TABLE 18h. MULTI SECTION - WIND ZONE 1 FRAME TIEDOWN SPACING (FT) - MAX. ROOF PITCH 7/12

Max. Wall Height	Max. Floor Height	36 ft Max. Width I-Beam Spacing 95.5"-99.5"	42 ft Max. Width I-Beam Spacing 95.5"-99.5"	48 ft Max. Width I-Beam Spacing 95.5"-99.5"
8 ft	25"	10'-8"*	7'-4"	8'-4"
	48"	9'-0"*	9'-0"*	5'-8"
	67"	4'-6"*	4'-8"*	4'-8"*
	80"	4'-0"*	4'-0"*	4'-4"*
9 ft	25"	10'-0"*	6'-8"	7'-8"
	48"	8'-0"*	8'-4"*	5'-6"
	67"	4'-4"*	4'-6"*	4'-6"*
	80"	NA	4'-0"*	4'-0"*
10 ft	25"	9'-0"*	6'-4"	7'-0"
	48"	7'-8"*	7'-8"*	5'-0"
	67"	4'-0"*	4'-4"*	4'-4"*
	80"	NA	NA	4'-0"*

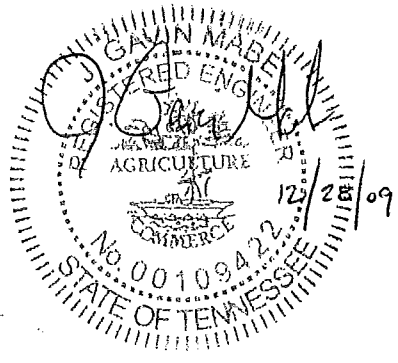

TABLE 19. SINGLE SECTION - WIND ZONE 2 NEAR I-BEAM FRAME TIEDOWN SPACING (FT) - MAX. ROOF PITCH 4.36/12

Max. Wall Height	Max. Floor Height	10 ft Max. Width I-Beam Spacing		12 ft Max. Width I-Beam Spacing		14 ft Max. Width I-Beam Spacing		16 ft Max. Width I-Beam Spacing		18 ft Max. Width I-Beam Spacing
		79.5"	95.5"-99.5"	95.5"	99.5"	95.5"	99.5"	95.5"	99.5"	99.5"
7 ft	25"	NA	NA	4'-4"	4'-0"	6'-8"	7'-0"	8'-0"	8'-0"	8'-0"
	48"	NA	NA	NA	NA	4'-0"	4'-6"	6'-0"	5'-8"	7'-0"
	67"	NA	NA	NA	NA	NA	NA	4'-8"	4'-6"	5'-8"
	80"	NA	NA	NA	NA	NA	NA	NA	NA	5'-0"
8 ft	25"	NA	NA	NA	NA	6'-0"	6'-0"	7'-0"	7'-0"	7'-0"
	48"	NA	NA	NA	NA	4'-0"	4'-0"	5'-4"	5'-0"	6'-0"
	67"	NA	NA	NA	NA	NA	NA	4'-0"	4'-0"	5'-0"
	80"	NA	NA	NA	NA	NA	NA	NA	NA	4'-6"
9 ft	25"	NA	NA	NA	NA	5'-8"	5'-4"	6'-0"	6'-0"	6'-4"
	48"	NA	NA	NA	NA	NA	NA	4'-8"	4'-8"	5'-6"
	67"	NA	NA	NA	NA	NA	NA	4'-0"	NA	4'-6"
	80"	NA	NA	NA	NA	NA	NA	NA	NA	4'-0"
10 ft	25"	NA	NA	NA	NA	5'-0"	4'-8"	5'-6"	5'-6"	5'-8"
	48"	NA	NA	NA	NA	NA	NA	4'-4"	4'-4"	5'-0"
	67"	NA	NA	NA	NA	NA	NA	NA	NA	4'-0"
	80"	NA	NA	NA	NA	NA	NA	NA	NA	NA

TABLE 19a. MULTI SECTION - WIND ZONE 2 NEAR I-BEAM FRAME TIEDOWN SPACING (FT) - MAX. ROOF PITCH 4.36/12

Max. Wall Height	Max. Floor Height	20 ft Max. Width I-Beam Spacing		24 ft Max. Width I-Beam Spacing			28 ft Max. Width I-Beam Spacing		32 ft Max. Width I-Beam Spacing	
		79.5"	95.5"-99.5"	79.5"	95.5"	99.5"	95.5"	99.5"	95.5"	99.5"
7 ft	25"	5'-0"	NA	6'-8"	5'-0"	4'-4"	7'-0"	6'-8"	7'-8"	7'-8"
	48"	NA	NA	4'-0"	NA	NA	4'-6"	4'-0"	6'-4"	5'-8"
	67"	NA	NA	NA	NA	NA	NA	NA	5'-0"	4'-6"
	80"	NA	NA	NA	NA	NA	NA	NA	NA	NA
8 ft	25"	4'-4"	NA	6'-0"	4'-4"	NA	6'-4"	6'-0"	7'-0"	7'-0"
	48"	NA	NA	NA	NA	NA	4'-0"	NA	5'-4"	5'-0"
	67"	NA	NA	NA	NA	NA	NA	NA	4'-0"	4'-0"
	80"	NA	NA	NA	NA	NA	NA	NA	NA	NA
9 ft	25"	4'-0"	NA	5'-4"	4'-0"	NA	5'-8"	5'-4"	6'-6"	6'-6"
	48"	NA	NA	NA	NA	NA	NA	NA	4'-8"	4'-6"
	67'	NA	NA	NA	NA	NA	NA	NA	NA	NA
	80"	NA	NA	NA	NA	NA	NA	NA	NA	NA
10 ft	25"	NA	NA	4'-8"	NA	NA	5'-0"	4'-8"	6'-0"	5'-8"
	48"	NA	NA	NA	NA	NA	NA	NA	4'-4"	4'-0"
	67"	NA	NA	NA	NA	NA	NA	NA	NA	NA
	80"	NA	NA	NA	NA	NA	NA	NA	NA	NA

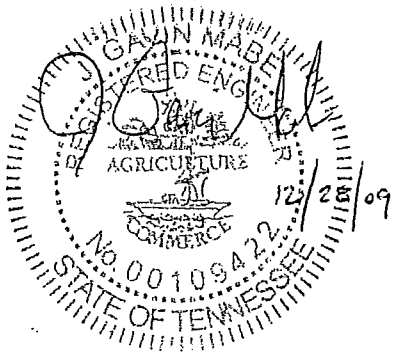

TABLE 19b. SINGLE SECTION - WIND ZONE 2 FAR I-BEAM FRAME TIEDOWN SPACING (FT) - MAX. ROOF PITCH 4.36/12

Max. Wall Height	Max. Floor Height	10 ft Max. Width I-Beam Spacing		12 ft Max. Width I-Beam Spacing	14 ft Max. Width I-Beam Spacing	16 ft Max. Width I-Beam Spacing	18 ft Max. Width I-Beam Spacing
		79.5"	95.5"-99.5"	95.5"-99.5"	95.5"-99.5"	95.5"-99.5"	99.5"
7 ft	25"	5'-8"	5'-8"	5'-8"	6'-0"	6'-0"	6'-0"
	48"	5'-8"	5'-8"	5'-8"	6'-0"	6'-0"	6'-0"
	67"	5'-6"	5'-8"	5'-8"	6'-0"	6'-0"	6'-0"
	80"	5'-6"	5'-8"	5'-8"	6'-0"	6'-0"	6'-0"
8 ft	25"	4'-8"	4'-8"	4'-8"	5'-0"	5'-0"	5'-4"
	48"	4'-8"	4'-8"	4'-8"	5'-0"	5'-0"	5'-4"
	67"	4'-8"	4'-8"	4'-8"	5'-0"	5'-0"	5'-4"
	80"	4'-6"	4'-8"	4'-8"	5'-0"	5'-0"	5'-4"
9 ft	25"	4'-0"	4'-0"	4'-0"	4'-4"	4'-6"	4'-8"
	48"	4'-0"	4'-0"	4'-0"	4'-4"	4'-6"	4'-8"
	67"	4'-0"	4'-0"	4'-0"	4'-4"	4'-6"	4'-8"
	80"	NA	4'-0"	4'-0"	4'-4"	4'-6"	4'-8"
10 ft	25"	NA	NA	NA	NA	NA	4'-0"
	48"	NA	NA	NA	NA	NA	4'-0"
	67"	NA	NA	NA	NA	NA	4'-0"
	80"	NA	NA	NA	NA	NA	4'-0"

TABLE 19c. MULTI SECTION - WIND ZONE 2 FAR I-BEAM FRAME TIEDOWN SPACING (FT) - MAX. ROOF PITCH 4.36/12

Max. Wall Height	Max. Floor Height	20 ft Max. Width I-Beam Spacing		24 ft Max. Width I-Beam Spacing		28 ft Max. Width I-Beam Spacing	32 ft Max. Width I-Beam Spacing
		79.5"	95.5"-99.5"	79.5"	95.5"-99.5"	95.5"-99.5"	95.5"-99.5"
7 ft	25"	8'-4"	8'-0"	7'-6"	7'-0"	6'-0"	5'-8"
	48"	7'-8"	7'-8"	7'-8"	7'-8"	7'-8"	6'-8"
	67"	7'-6"	7'-6"	7'-6"	7'-6"	7'-6"	7'-4"
	80"	7'-4"	7'-4"	7'-4"	7'-4"	7'-4"	7'-0"
8 ft	25"	7-6"	7'-4"	7'-0"	6'-6"	5'-8"	5'-6"
	48"	7'-0"	7'-0"	7'-0"	7'-0"	7'-0"	6'-8"
	67'	6'-8"	6'-8"	6'-8"	6'-8"	6'-8"	6'-8"
	80"	6'-6"	6'-6"	6'-6"	6'-8"	6'-8"	6'-6"
9 ft	25"	6'-8"	6'-8"	6'-6"	6'-0"	5'-6"	5'-0"
	48"	6'-4"	6'-4"	6'-4"	6'-4"	6'-4"	6'-4"
	67"	6'-0"	6'-0"	6'-0"	6'-0"	6'-0"	6'-0"
	80"	5'-8"	5'-8"	6'-0"	6'-0"	6'-0"	6'-0"
10 ft	25"	6'-0"	6'-0"	6'-0"	5'-8"	5'-0"	5'-0"
	48"	5'-8"	5'-8"	5'-8"	5'-8"	5'-6"	5'-8"
	67"	5'-6"	5'-6"	5'-6"	5'-8"	5'-8"	5'-8"
	80"	5'-4"	5'-4"	5'-4"	5'-6"	5'-6"	5'-6"

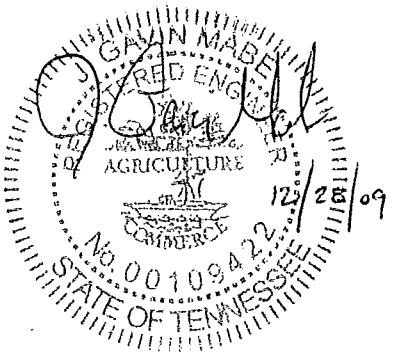

TABLE 19d. MULTI SECTION - WIND ZONE 2 NEAR I-BEAM FRAME TIEDOWN SPACING (FT) - MAX. ROOF PITCH 5/12

Max. Wall Height	Max. Floor Height	20 ft Max. Width I-Beam Spacing		24 ft Max. Width I-Beam Spacing		28 ft Max. Width I-Beam Spacing		32 ft Max. Width I-Beam Spacing	
		79.5"	95.5"-99.5"	95.5"	99.5"	95.5"	99.5"	95.5"	99.5"
8 ft	25"	NA	NA	NA	NA	NA	NA	4'-0"	4'-0"
	48"	NA	NA	NA	NA	NA	NA	NA	NA
	67"	NA	NA	NA	NA	NA	NA	NA	NA
	80"	NA	NA	NA	NA	NA	NA	NA	NA
9 ft	25"	NA	NA	NA	NA	NA	NA	NA	NA
	48"	NA	NA	NA	NA	NA	NA	NA	NA
	67"	NA	NA	NA	NA	NA	NA	NA	NA
	80"	NA	NA	NA	NA	NA	NA	NA	NA
10 ft	25"	NA	NA	NA	NA	NA	NA	NA	NA
	48"	NA	NA	NA	NA	NA	NA	NA	NA
	67"	NA	NA	NA	NA	NA	NA	NA	NA
	80"	NA	NA	NA	NA	NA	NA	NA	NA

TABLE 19e. MULTI SECTION - WIND ZONE 2 FAR I-BEAM FRAME TIEDOWN SPACING (FT) - MAX. ROOF PITCH 5/12

Max. Wall Height	Max. Floor Height	20 ft Max. Width I-Beam Spacing 79.5"-99.5"	24 ft Max. Width I-Beam Spacing 95.5"-99.5"	28 ft Max. Width I-Beam Spacing 95.5"-99.5"	32 ft Max. Width I-Beam Spacing 95.5"-99.5"
8 ft	25"	4'-8"	4'-4"	4'-0"	NA
	48"	4'-8"	4'-6"	4'-0"	4'-0"
	67"	4'-4"	4'-4"	4'-0"	4'-0"
	80"	4'-4"	4'-0"	4'-0"	NA
9 ft	25"	4'-0"	4'-0"	NA	NA
	48"	4'-4"	4'-0"	4'-0"	NA
	67"	4'-0"	4'-0"	NA	NA
	80"	4'-0"	NA	NA	NA
10 ft	25"	NA	NA	NA	NA
	48"	4'-0"	NA	NA	NA
	67"	NA	NA	NA	NA
	80"	NA	NA	NA	NA

TABLE 19f. MULTI SECTION - WIND ZONE 2 FAR I-BEAM FRAME TIEDOWN SPACING (FT) - MAX. ROOF PITCH 6/12

Max. Wall Height	Max. Floor Height	20 ft Max. Width I-Beam Spacing 79.5"-99.5"	24 ft Max. Width I-Beam Spacing 95.5"-99.5"	28 ft Max. Width I-Beam Spacing 95.5"-99.5"	32 ft Max. Width I-Beam Spacing 95.5"-99.5"
8 ft	25"	4'-4"	4'-0"	NA	NA
	48"	4'-4"	4'-0"	4'-0"	NA
	67"	4'-0"	4'-0"	NA	NA
	80"	4'-0"	NA	NA	NA
9 ft	25"	NA	NA	NA	NA
	48"	4'-0"	NA	NA	NA
	67"	NA	NA	NA	NA
	80"	NA	NA	NA	NA

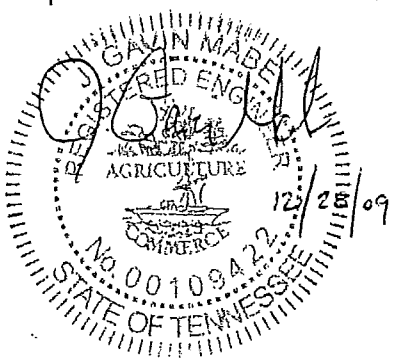

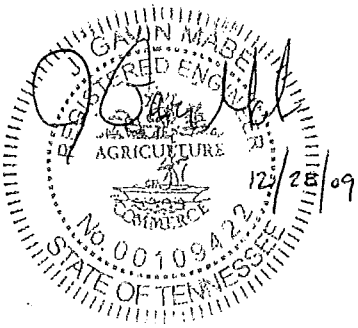

TABLE 19g. MULTI SECTION - WIND ZONE 2 FAR I-BEAM FRAME TIEDOWN SPACING (FT) - MAX. ROOF PITCH 7/12

Max. Wall Height	Max. Floor Height	20 ft Max. Width I-Beam Spacing 79.5"-99.5"	24 ft Max. Width I-Beam Spacing 95.5"-99.5"	28 ft Max. Width I-Beam Spacing 95.5"-99.5"	32 ft Max. Width I-Beam Spacing 95.5"-99.5"
8 ft	25"	4'-0"	NA	NA	NA
	48"	4'-0"	NA	NA	NA
	67"	NA	NA	NA	NA
	80"	NA	NA	NA	NA

TABLE 20. SINGLE SECTION - WIND ZONE 3 NEAR I-BEAM FRAME TIEDOWN SPACING (FT) - MAX. ROOF PITCH 4.36/12

Max. Wall Height	Max. Floor Height	10 ft Max. Width I-Beam Spacing		12 ft Max. Width I-Beam Spacing		14 ft Max. Width I-Beam Spacing		16 ft Max. Width I-Beam Spacing		18 ft Max. Width I-Beam Spacing
		79.5"	95.5"-99.5"	95.5"	99.5"	95.5"	99.5"	95.5"	99.5"	99.5"
7 ft	25"	NA	NA	4'-0"	NA	5'-8"	5'-6"	6'-6"	6'-6"	6'-6"
	48"	NA	NA	NA	NA	NA	NA	5'-0"	4'-8"	5'-8"
	67"	NA	NA	NA	NA	NA	NA	4'-0"	NA	4'-8"
	80"	NA	NA	NA	NA	NA	NA	NA	NA	4'-0"
8 ft	25"	NA	NA	NA	NA	5'-0"	5'-0"	5'-8"	5'-8"	5'-8"
	48"	NA	NA	NA	NA	NA	NA	4'-6"	4'-4"	5'-0"
	67"	NA	NA	NA	NA	NA	NA	NA	NA	4'-0"
	80"	NA	NA	NA	NA	NA	NA	NA	NA	NA
9 ft	25"	NA	NA	NA	NA	4'-8"	4'-6"	5'-0"	5'-0"	5'-0"
	48"	NA	NA	NA	NA	NA	NA	4'-0"	4'-0"	4'-8"
	67"	NA	NA	NA	NA	NA	NA	NA	NA	NA
	80"	NA	NA	NA	NA	NA	NA	NA	NA	NA
10 ft	25"	NA	NA	NA	NA	4'-0"	4'-0"	4'-6"	4'-6"	4'-8"
	48'	NA	NA	NA	NA	NA	NA	NA	NA	4'-0"
	67'	NA	NA	NA	NA	NA	NA	NA	NA	NA
	80"	NA	NA	NA	NA	NA	NA	NA	NA	NA

TABLE 20a. MULTI SECTION - WIND ZONE 3 NEAR I-BEAM FRAME TIEDOWN SPACING (FT) - MAX. ROOF PITCH 4.36/12

Max. Wall Height	Max. Floor Height	20 ft Max. Width I-Beam Spacing		24 ft Max. Width I-Beam Spacing			28 ft Max. Width I-Beam Spacing		32 ft Max. Width I-Beam Spacing	
		79.5"	95.5"-99.5"	79.5"	95.5"	99.5"	95.5"	99.5"	95.5"	99.5"
7 ft	25"	4'-0"	NA	5'-6"	4'-0"	NA	5'-8"	5'-6"	6'-4"	6'-0"
	48"	NA	NA	NA	NA	NA	NA	NA	5'-0"	4'-8"
	67"	NA	NA	NA	NA	NA	NA	NA	NA	NA
	80"	NA	NA	NA	NA	NA	NA	NA	NA	NA
8 ft	25"	NA	NA	5'-0"	NA	NA	5'-0"	5'-0"	5'-8"	5'-8"
	48"	NA	NA	NA	NA	NA	NA	NA	4'-4"	4'-0"
	67"	NA	NA	NA	NA	NA	NA	NA	NA	NA
	80"	NA	NA	NA	NA	NA	NA	NA	NA	NA
9 ft	25"	NA	NA	4'-6"	NA	NA	4'-8"	4'-6"	5'-0"	5'-0"
	48"	NA	NA	NA	NA	NA	NA	NA	4'-0"	4'-0"
	67"	NA	NA	NA	NA	NA	NA	NA	NA	NA
	80"	NA	NA	NA	NA	NA	NA	NA	NA	NA
10 ft	25"	NA	NA	4'-0"	NA	NA	4'-0"	4'-0"	4'-8"	4'-8'
	48"	NA	NA	NA	NA	NA	NA	NA	NA	NA
	67"	NA	NA	NA	NA	NA	NA	NA	NA	NA
	80"	NA	NA	NA	NA	NA	NA	NA	NA	NA

TABLE 20b. SINGLE SECTION - WIND ZONE 3 FAR I-BEAM FRAME TIEDOWN SPACING (FT) - MAX. ROOF PITCH 4.36/12

Max. Wall Height	Max. Floor Height	10 ft Max. Width I-Beam Spacing 79.5"	10 ft Max. Width I-Beam Spacing 95.5"-99.5"	12 ft Max. Width I-Beam Spacing 95.5"-99.5"	14 ft Max. Width I-Beam Spacing 95.5"-99.5"	16 ft Max. Width I-Beam Spacing 95.5"-99.5"	18 ft Max. Width I-Beam Spacing 99.5"
7 ft	25"	4'-0"	4'-4"	4'-6"	4'-8"	4'-8"	4'-8"
	48"	4'-0"	4'-4"	4'-6"	4'-8"	4'-8"	4'-8"
	67"	4'-0"	4'-4"	4'-6"	4'-8"	4'-8"	4'-8"
	80"	4'-0"	4'-4"	4'-6"	4'-8"	4'-8"	4'-8"
8 ft	25"	NA	NA	NA	4'-0"	4'-0"	4'-0"
	48"	NA	NA	NA	4'-0"	4'-0"	4'-0"
	67"	NA	NA	NA	4'-0"	4'-0"	4'-0"
	80"	NA	NA	NA	4'-0"	4'-0"	4'-0"
9 ft	25"	NA	NA	NA	NA	NA	NA
	48"	NA	NA	NA	NA	NA	NA
	67"	NA	NA	NA	NA	NA	NA
	80"	NA	NA	NA	NA	NA	NA
10 ft	25"	NA	NA	NA	NA	NA	NA
	48"	NA	NA	NA	NA	NA	NA
	67"	NA	NA	NA	NA	NA	NA
	80"	NA	NA	NA	NA	NA	NA

TABLE 20c. MULTI SECTION - WIND ZONE 3 FAR I-BEAM FRAME TIEDOWN SPACING (FT) - MAX. ROOF PITCH 4.36/12

Max. Wall Height	Max. Floor Height	20 ft Max. Width I-Beam Spacing 79.5"	20 ft Max. Width I-Beam Spacing 95.5"-99.5"	24 ft Max. Width I-Beam Spacing 79.5"	24 ft Max. Width I-Beam Spacing 95.5"-99.5"	28 ft Max. Width I-Beam Spacing 95.5"-99.5"	32 ft Max. Width I-Beam Spacing 95.5"-99.5"
7 ft	25"	5'-8"	4'-8"	5'-0"	4'-8"	4'-4"	4'-0"
	48"	6'-0"	6'-0"	6'-0"	6'-0"	5'-0"	4'-8"
	67"	6'-0"	6'-0"	6'-0"	6'-0"	5'-8"	5'-4"
	80"	5'-8"	5'-8"	5'-8"	5'-8"	5'-8"	5'-8"
8 ft	25"	5'-4"	4'-6"	4'-8"	4'-6"	4'-0"	NA
	48"	5'-8"	5'-8"	5'-8"	5'-8"	5'-0"	4'-6"
	67"	5'-4"	5'-4"	5'-4"	5'-4"	5'-4"	5'-4"
	80"	5'-0"	5'-0"	5'-0"	5'-0"	5'-0"	5'-0"
9 ft	25"	4'-8"	4'-4"	4'-6"	4'-4"	NA	NA
	48"	5'-0"	5'-0"	5'-0"	5'-0"	4'-8"	4'-4"
	67"	4'-8"	4'-8"	4'-8"	4'-8"	4'-8"	4'-8"
	80"	4'-8"	4'-8"	4'-8"	4'-8"	4'-8"	4'-8"
10 ft	25"	4'-6"	4'-0"	4'-0"	4'-0"	NA	NA
	48"	4'-8"	4'-8"	4'-8"	4'-8"	4'-6"	4'-0"
	67"	4'-4"	4'-6"	4'-6"	4'-6"	4'-6"	4'-6"
	80"	4'-4"	4'-4"	4'-4"	4'-4"	4'-4"	4'-4"

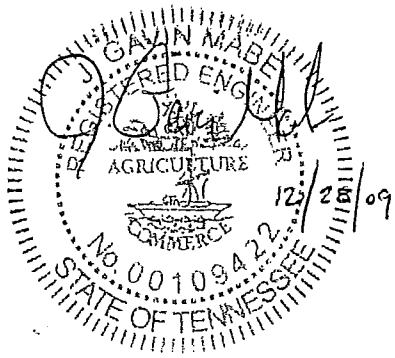

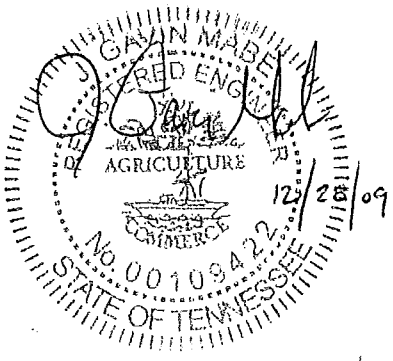

SIDEWALL VERTICAL ANCHORS

Homes designed for Wind Zones II and III also require vertical tie downs along the sidewalls (**Figure 63**). The vertical tie down brackets may be factory installed or site installed. Vertical and frame sidewall tie downs may connect to one double-headed anchor or each to its own dedicated anchor per the spacing requirements listed in Tables 19 and 20.

LONGITUDINAL FRAME ANCHORS

Use **Table 21** to determine the number of longitudinal frame anchors required at each end of the home. The longitudinal frame anchors may be factory installed, site installed or connected to a crossmember within 3" of the main I-beam.

NOTE:

Friction is assumed to contribute to the resistance in the longitudinal direction when piers are no more than 64" high. Friction from a single block pier is assumed for piers less than 44" high. Friction from a double block pier is assumed for piers between 44" and 64" high.

TABLE 21. WIND ZONE 1 LONGITUDINAL FRAME TIEDOWN QUANTITIES (QUANTITY EACH END OF HOME)

Max. Pier Height	Max. Roof Pitch	Single Section (18 ft Max. Floor Width) Minimum Unit Lengths								Multi Section (32 ft Max. Floor Width) Minimum Unit Lengths								Triple Section (48 ft Max. Floor Width) Minimum Unit Lengths							
		36'	42'	48'	54'	60'	66'	72'	78'	36'	42'	48'	54'	60'	66'	72'	78'	36'	42'	48'	54'	60'	66'	72'	78'
24"	4.36	1	1	0	0	0	0	0	0	1	1	0	0	0	0	0	0	3	2	1	0	0	0	0	0
36"		1	1	1	1	1	0	0	0	3	2	2	1	1	1	0	0	4	4	3	3	2	2	1	1
44"		0	0	0	0	0	0	0	0	0	0	0	0	0	0	0	0	1	0	0	0	0	0	0	0
52"		1	0	0	0	0	0	0	0	1	0	0	0	0	0	0	0	2	1	0	0	0	0	0	0
64"		1	1	1	1	0	0	0	0	2	2	1	1	1	0	0	0	4	3	3	2	1	1	0	0
24"	7									3	2	1	0	0	0	0	0	4	3	2	1	1	0	0	0
36"										4	3	2	2	2	1	1	1	6	5	4	4	3	3	2	2
44"										2	0	0	0	0	0	0	0	2	1	0	0	0	0	0	0
52"										2	1	0	0	0	0	0	0	3	2	1	0	0	0	0	0
64"										3	2	2	2	1	1	0	0	5	4	4	3	3	2	1	1

PIER HEIGHT GREATER THAN 64" - WIND ZONE 1 LONGITUDINAL FRAME TIEDOWN QUANTITIES (QUANTITY EACH END OF HOME)

Max. Wall Height	Max. Roof Pitch	Max. Home Width: Single Section 10 ft	12 ft	14 ft	16 ft	18 ft	Multi Section 20 ft	24 ft	28 ft	32 ft	Triple 36 ft	48 ft
7 ft	4.36	1	2	2	2	2	3	3	4	4	5	6
7.5 ft	4.36	1	2	2	2	2	3	3	4	4	5	7
8 ft	4.36	2	2	2	2	2	3	3	4	4	5	7
	5	NA	NA	NA	NA	NA	3	3	4	4	5	7
	6	NA	NA	NA	NA	NA	3	3	4	5	5	8
	7	NA	NA	NA	NA	NA	3	4	4	5	6	8
9 ft	4.36	2	2	2	2	3	3	3	4	5	5	7
	5	NA	NA	NA	NA	NA	3	4	4	5	6	8
	6	NA	NA	NA	NA	NA	3	4	4	5	6	8
	7	NA	NA	NA	NA	NA	3	4	5	5	6	9
10 ft	4.36	2	2	2	3	3	3	4	4	5	6	8
	5	NA	NA	NA	NA	NA	3	4	4	5	6	8
	6	NA	NA	NA	NA	NA	3	4	5	5	6	9
	7	NA	NA	NA	NA	NA	3	4	5	6	6	9

TABLE 22. WIND ZONE 2 LONGITUDINAL FRAME TIEDOWN QUANTITIES (EACH END OF HOME)

Max. Wall Height	Max. Roof Pitch	Max. Home Width: Single Section 10 ft	12 ft	14 ft	16 ft	18 ft	Multi Section 20 ft	24 ft	28 ft	32 ft	Triple 36 ft	48 ft
7 ft	3	2	2	3	3	3	4	5	5	6	8	9
	4.36	2	2	3	3	3	4	5	6	7	9	10
7.5 ft	3	2	2	3	3	3	4	5	6	6	9	10
	4.36	2	3	3	3	4	4	5	6	7	9	11
8 ft	3	2	3	3	3	4	4	5	6	7	9	10
	4.36	2	3	3	3	4	4	5	6	7	10	11
	5	NA	NA	NA	NA	NA	4	5	6	7	10	12
	6	NA	NA	NA	NA	NA	5	6	7	8	11	12
	7	NA	NA	NA	NA	NA	5	6	7	8	12	13
9 ft	3	2	3	3	4	4	4	5	6	7	10	11
	4.36	2	3	3	4	4	5	6	7	8	11	12
	5	NA	NA	NA	NA	NA	5	6	7	8	11	13
	6	NA	NA	NA	NA	NA	5	6	7	8	12	13
	7	NA	NA	NA	NA	NA	5	6	7	9	12	14
10 ft	3	3	3	3	4	4	5	6	7	8	10	12
	4.36	3	3	4	4	4	5	6	7	8	11	13
	5	NA	NA	NA	NA	NA	5	6	7	9	12	13
	6	NA	NA	NA	NA	NA	5	6	8	9	12	14
	7	NA	NA	NA	NA	NA	5	7	8	9	13	15

TABLE 23. WIND ZONE 3 LONGITUDINAL FRAME TIEDOWN QUANTITIES (EACH END OF HOME)

Max. Wall Height	Max. Roof Pitch	Max. Home Width: Single Section 10 ft	12 ft	14 ft	16 ft	18 ft	Multi Section 20 ft	24 ft	28 ft	32 ft	Triple 36 ft	48 ft
7 ft	3	2	3	3	4	4	4	5	6	7	10	11
	4.36	2	3	3	4	4	5	6	7	8	11	12
7.5 ft	3	2	3	3	4	4	5	6	7	8	10	12
	4.36	3	3	3	4	4	5	6	7	8	11	13
8 ft	3	3	3	3	4	4	5	6	7	8	11	12
	4.36	3	3	4	4	4	5	6	7	9	12	13
	5	NA	NA	NA	NA	NA	5	6	8	9	12	14
	6	NA	NA	NA	NA	NA	5	7	8	9	13	15
	7	NA	NA	NA	NA	NA	6	7	8	10	14	16
9 ft	3	3	3	4	4	5	5	6	8	9	12	13
	4.36	3	3	4	4	5	6	7	8	9	13	14
	5	NA	NA	NA	NA	NA	6	7	8	9	13	15
	6	NA	NA	NA	NA	NA	6	7	9	10	14	16
	7	NA	NA	NA	NA	NA	6	7	9	10	15	17
10 ft	3	3	4	4	5	5	6	7	8	9	13	14
	4.36	3	4	4	5	5	6	7	9	10	14	15
	5	NA	NA	NA	NA	NA	6	7	9	10	14	16
	6	NA	NA	NA	NA	NA	6	8	9	11	15	17
	7	NA	NA	NA	NA	NA	6	8	10	11	16	18

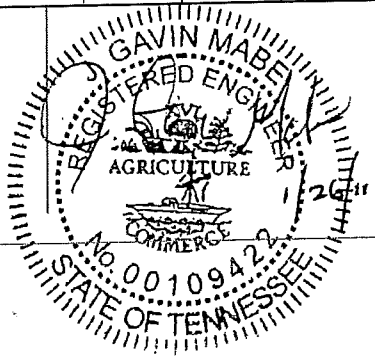

MARRIAGE LINE VERTICAL ANCHORS (WIND ZONES II AND III ONLY)

In Wind Zones II and III, marriage line anchors are required at each column along the marriage wall.

There may be manufacturer-installed brackets indicating required tie down locations (may be identified by tags or paint). If brackets are not present, then an alternative acceptable connection method, such as steel angles (provided by the manufacturer) must be used (**Figure 63**). If necessary to avoid interference with piers, the tie down location may be offset horizontally from the column by a maximum of 12 inches.

When to install marriage line anchors. Anchors along the marriage line must be installed prior to the second half of a multi-section home being set.

TAG UNIT FRAME AND VERTICAL ANCHORS

Tag unit anchoring is not covered in this manual. The required anchoring details will accompany homes with tag units.

PORCH POST ANCHORS

Each post that requires an anchor will have a tiedown bracket attached from the factory or be designated by a pier label.

OFFSET UNIT ANCHORS

Anchors installed on offset units will be installed per the standard tiedown charts unless otherwise instructed by details that accompany the home.

STEP 2. DETERMINE TIEDOWN CONFIGURATION

Tiedown spacings have been provided when the tie down strap is connected to the near I-beam and/or when the strap is connected to the far I-beam.

STEP 3. SELECT ANCHORS

Use the torque probe results from **Prepare the Site, STEP 6. DETERMINE GROUND ANCHOR HOLDING CAPACITY** (p. 19) and the anchor manufacturer instructions select the type and length of anchor to use. The installed ground anchor size (length) must be listed (i.e. approved) for the soil class.

Make sure the anchor is of sufficient length such that the top of the helix is below the frost line. Select a shaft diameter sufficient to resist excessive torsion, "ring-off" (when the helix or anchor head separates from shaft) or shaft splitting. Consult the anchor supplier for guidance.

Review all of **STEP 4. INSTALL ANCHORS** (p. 90) and **STEP 5. INSTALL STRAPS** (p. 91) before making final anchor selections to determine when single headed vs. double headed anchors should be used. Follow the specifications in **Table 24** when selecting stabilizing system components.

TABLE 24. ANCHOR TYPES

Anchor type	Anchor (soil) class
Helix soil anchor	2, 3, 4A
Rock anchor	1 (for use in solid rock only)
Concrete anchor	Concrete ONLY

TABLE 25. ANCHOR SYSTEM MATERIALS SPECIFICATIONS

Component	Specification
Anchors	Anchors must be tested and listed to resist a minimum ultimate load of 4,725 lbs and a minimum allowable working load of 3,150 lbs or ultimate and corresponding working load limited by soil conditions and anchor length. The working load is the maximum load the designer can use. Ground anchors must be provided with protection against weather deterioration and corrosion at least equivalent to that provided by a coating of zinc on steel of not less than 0.30 oz per sq ft of surface coated.
Straps	Straps must be minimum 1-1/4" x 0.035" zinc-coated (0.30 oz per sq ft) steel strapping conforming to ASTM D3953-97, Type 1, Grade 1, Finish B with a minimum allowable working load capacity of 3,150 lbs and a minimum ultimate load of 4,725 lbs. Slit or cut edges of zinc-coated strapping do not need to be zinc coated.
Stabilizer plates	The size and type of stabilizer plate, if required by the ground anchor manufacturer, will be specified in the anchor manufacturer's instructions. Stabilizer plates must be provided with protection against weather deterioration and corrosion at least equivalent to that provided by a coating of zinc on steel of not less than 0.30 oz per sq ft of surface coated. Alternatively, ABS stabilizer plates may be used when listed and certified for such use.

STEP 4. INSTALL ANCHORS

Before beginning anchor installation, check for obstructions under the home such as piers and frame members that may interfere with the tie down strapping. Check with utility companies to determine the location of underground utilities, such as electrical and phone lines, and water, sewer and gas pipes, that may be buried in potential anchor locations. Also check for homeowner-installed wires and pipes, such as those connecting exterior lighting or sheds to the home. These must also be avoided.

FRAME ANCHORS

Frame anchors can be installed in two ways, in-line and against a stabilizer plate. The two methods are discussed below:

In-Line Configuration

The in-line configuration (**Figure 55**) for homes can be used in Wind Zone I only. Typically, in-line anchors are used under high homes where the anchors can be installed from under the home after the home is set. In-line anchors can also be installed before the home is set, however precisely aligning the anchor with the home both vertically and horizontally is difficult. Using swivel connectors for the strap to beam connection can provide some horizontal flexibility.

To install in-line frame anchors, drive the anchor into the ground at an angle and location such that a straight line can be drawn from the tip of the anchor through the anchor head and to the connection point on the I-beam (**Figure 55**).

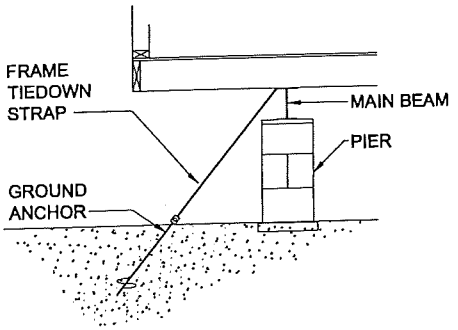

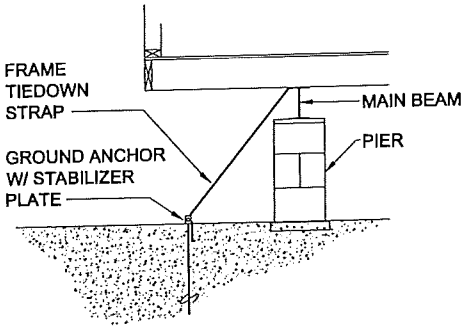

Stabilizer Plate Configuration

Stabilizer plate configurations (**Figure 57**) are suitable for homes in all wind zones. Anchors may be installed after the home is set. A stabilizer device, typically an ABS or metal plate, is used to prevent the top of the anchor from slicing through the soil when the load is applied. Stabilizer plates are available in a variety of widths. Choose the widest plate that can be driven into the soil to maximize resistance to movement. The LAHJ may have stabilizer plate requirements.

Grading area around anchors. Anchor heads should not rest in sunken spots. Grade the ground so that water does not collect around anchor heads, but runs away from the anchor and out from under the home. Do not bury anchor heads.

Figure 55. *In-line anchor configuration*

Figure 56. *Stabilizer plate configuration*

Anchor alignment. Properly aligning the anchor is critical to performance.

Install anchors with stabilizer plates as follows:

1. **Measure.** To determine the stabilizer plate location, measure from the top of the I-beam to the ground directly under it and then use the same measurement directly away from that point under the beam (**Figure 57**). The anchor and plate must be under the home, but within six inches of the exterior wall for a near beam set and ten inches minimum from the exterior wall for a far beam set. Be careful not to place in a location that will interfere with skirting.

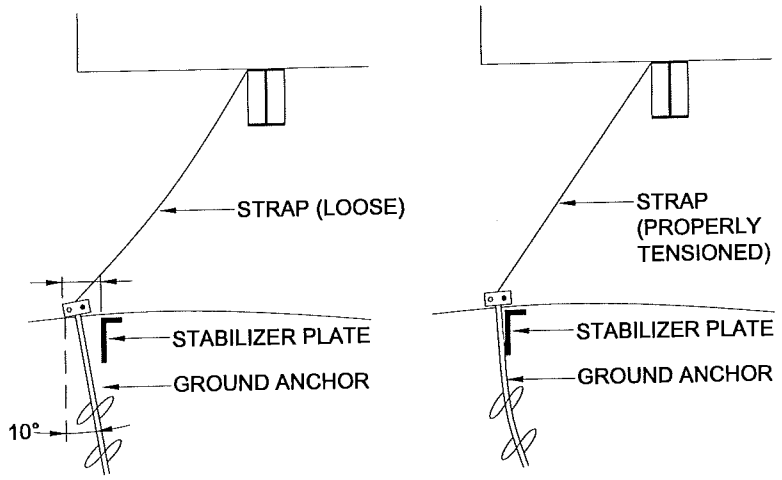

Figure 57. *Determining anchor and stabilizer plate location*

2. **Install anchor.** To assure that the anchor attachment point will end up at the stabilizer plate, start the anchor insertion approximately 12 inches back from from the desired location if using a 48 inch long anchor, or approximately 16 inches if using a 60 inch long anchor. Install the anchor at about 10 degrees off vertical, with the head tilted away from the home. Install the anchor to a depth of approximately one half its length.
3. **Drive stabilizer plate.** Drive the stabilizer plate into the ground to its full depth at the point determined in Step 1.
4. **Complete anchor installation.** Screw the anchor the rest of the way into the ground. The finished anchor must be installed to its full depth. When the anchor strap is properly tensioned it will pull the anchor head and shaft into the stabilizer plate.

VERTICAL ANCHORS

To install vertical anchors, screw the anchor into the ground directly under the strap attachment point on the home until the bottom of the anchor head is flush with the ground or no more than one inch above grade.

STEP 5. INSTALL STRAPS

Follow the instructions below to connect straps from the home to sidewall frame, end wall frame and vertical anchors.

Always protect straps at sharp corners including around I-beams with radius clips or other methods (**Figure 58**). Radius clips may be fabricated from galvanized steel strap formed to fit around corners.

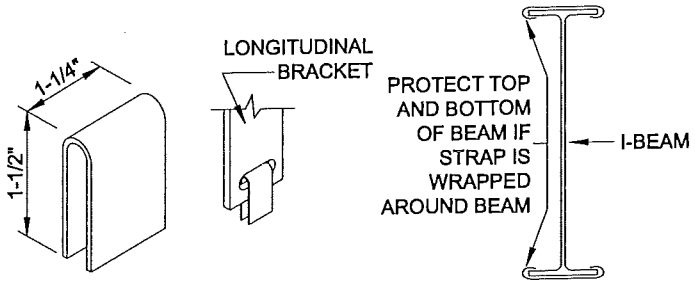

Figure 58. *Radius clips*

SPLICING STRAPS

Splicing may be required when a pre-cut strap is of insufficient length. Splices must be made by overlapping the straps by 12 inches, applying one splice clip from above and the other from below; use a crimping tool to tightly seal the splice clips (**Figure 59**). Do not run any portion of the splice through an anchor head bolt.

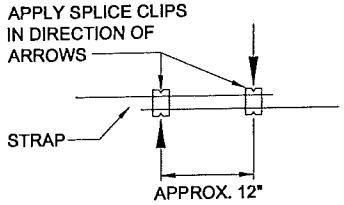

Figure 59. *Tie down strap splice*

FRAME ANCHORS

Install straps to frame anchors as follows:

1. **Connect strap to home.** Connect one end of the strap to the top of the I-beam using approved buckles or clips (swivel or hook clip preferred). When frame ties are connected to the bottom of the beam it must be within 3" of a crossmember.

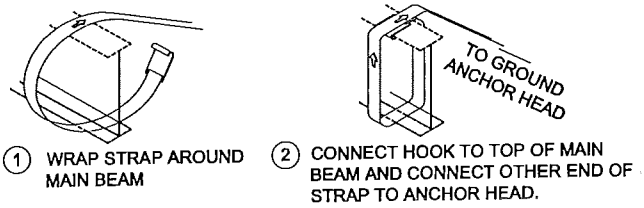

Figure 60. *Strap to beam connection*

2. **Connect strap to anchor.** Connect the other end of the strap to the split bolt in the anchor. Leave enough strap length to be able to make three complete turns,or minimum required per manufacturer's installation instructions, around the bolt before it becomes tight (approximately 2-1/2 inches per turn or 13 inches total). Fewer than three turns, or required per manufacturer's installation instructions, and the strap may not hold onto the bolt when force is applied. Conversely, too many turns may not fit within the U-channel of the anchor head. Follow the procedure outlined in **Figure 61**.

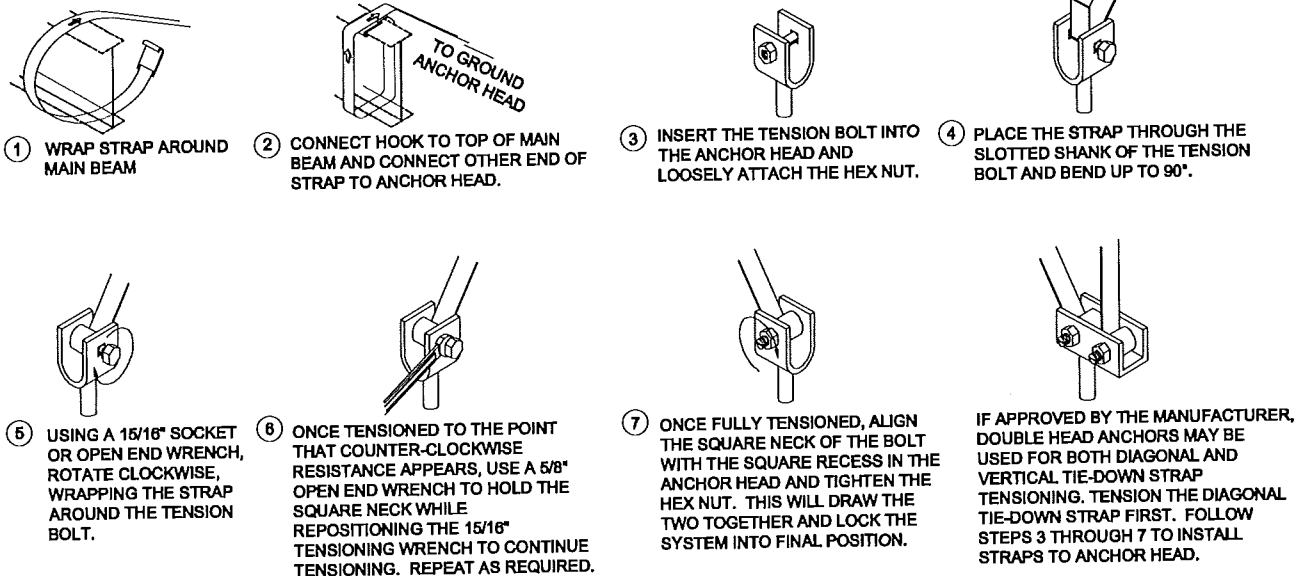

Figure 61. *Procedure for connecting the strap to frame and anchor*

3. **Pretension anchor.** For anchors with stabilizer plates, pretension the anchor by pulling it up to the stabilizer plate using the strap and take-up bolt to move the anchor head. Continue pulling the strap until the plate moves a small amount (about 1/2 inch). This is called packing the plate and it will yield the strongest resistance (the bottom of the anchor head should be a maximum one inch above the top of the stabilizer plate).

Anchor head location. As the anchor is pulled up to meet the stabilizer plate, the head of the anchor will rise. In its final position, the bottom of the anchor head should be no more than 1/4 inch above the top of the stabilizer plate.

LONGITUDINAL FRAME ANCHORS

Attach straps to the bracket welded by the manufacturer to the frame (**Figure 62**). If no brackets have been installed, use approved beam clamps designed specifically for this purpose, available from anchor suppliers or connect the strap to a spring hanger or a crossmember (within 3" of the main I-beam). Connect straps to anchors following same procedure as for sidewall frame anchors. Protection of the strap at sharp corners must be provided (p.91).

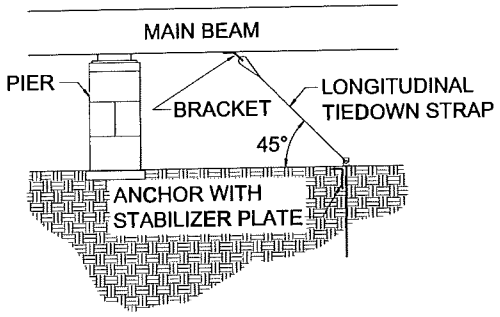

Figure 62. *Longitudinal frame anchor attachment method*

Sidewall and marriage line vertical tiedowns may be installed in the factory with either an angle bracket, Mastercraft #5705 bracket or a BP-10 bracket. Where brackets have not been factory installed, install provided Mastercraft #5705 or steel angle brackets and straps as shown in **Figure 63**.

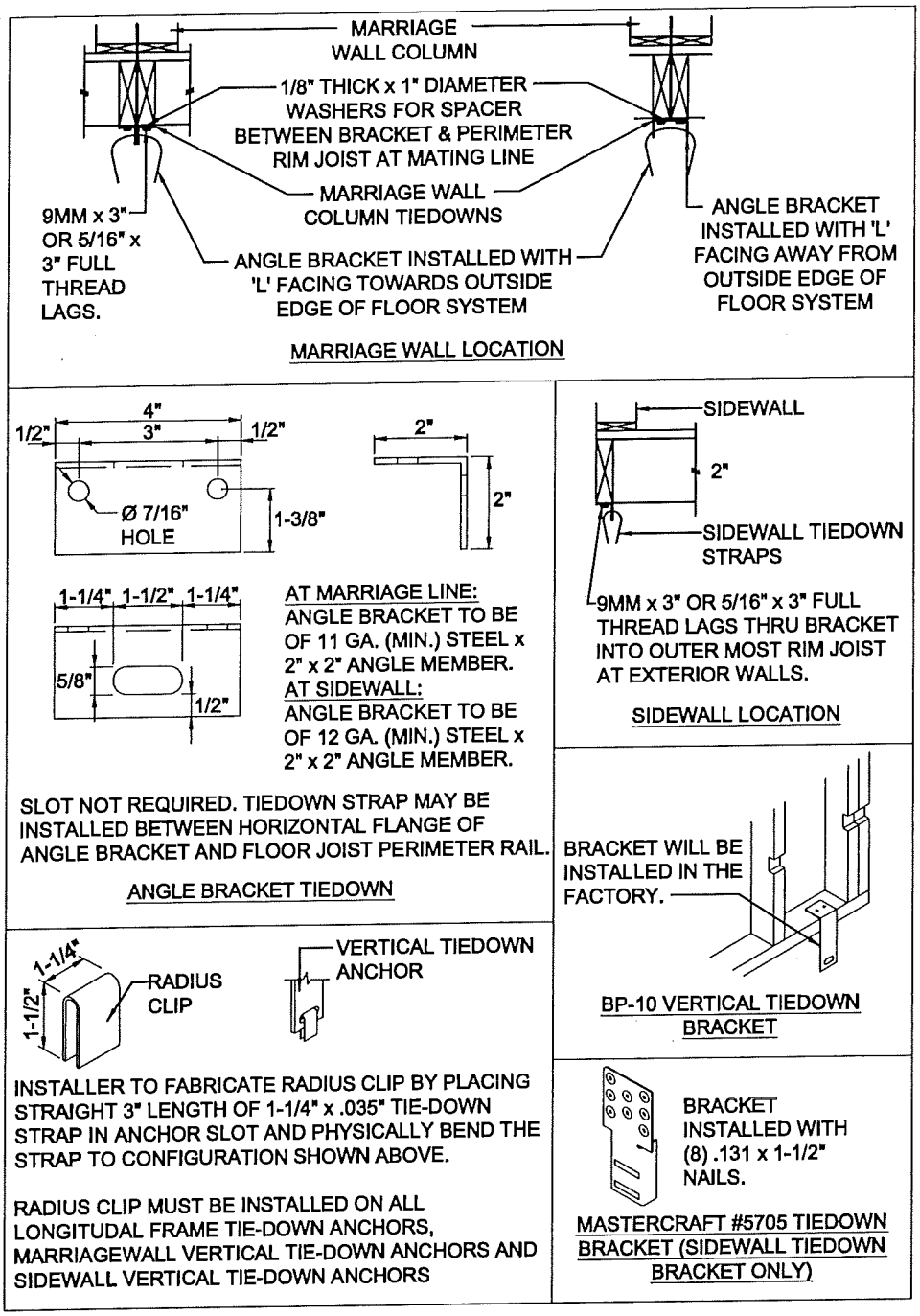

Figure 63. *Sidewall and marriage line vertical tie down connections.*

STEP 6. TIGHTEN AND ADJUST STRAPS

After all anchors have been installed and pre-tensioned, recheck all anchor straps to assure that they are tight and that the anchor shafts have remained in contact with the stabilizer plates. Do not over tension straps.

▶ go to Connect Utilities (p. 95)

Connect Utilities

This chapter contains procedures and requirements for the connection and testing of utility hook-ups. Responsibility for making utility connections varies by location. Consult the LAHJ and the utility before connecting the home to any utilities.

Follow the Steps below:

- ▼ STEP 1. CONNECT ELECTRICAL SERVICE (p. 95)
- ▼ STEP 2. CONNECT WATER SERVICE (p. 98)
- ▼ STEP 3. CONNECT GAS SERVICE (p. 100)
- ▼ STEP 4. CONNECT OIL SERVICE (p. 102)

STEP 1. CONNECT ELECTRICAL SERVICE

The home is designed for connection to an electrical wiring system rated at 120/240 volt AC. Service connection requirements depend on whether the meter will be installed on a post or pole or mounted on the home more than 6 feet from the circuit breaker panel. It is recommended that this connection be performed by a licensed electrician.

METER MOUNTED ON POST OR POLE (OR MOUNTED ON THE HOME MORE THAN 6 FEET FROM THE CIRCUIT BREAKER PANEL)

Feeder Wire and Equipment Sizes

The feeder must contain four continuous insulated, color-coded, feeder conductors, with one used as the equipment grounding conductor (**Figure 64**). The current rating (in amperes) of the home can be found on the tag located on the outside next to the feeder or service entrance, and on the electrical distribution panel. Using this information, determine the required feeder wire size from **Table 26**. These sizes are based on an ambient temperature of 86 degrees Fahrenheit and do not take voltage drop into consideration.

Acceptable conductor types are: RHH, RHW, RHW-2, THHN, THHW, THW, THW2, THWN, THWN-2, XHHW, XHHW-2, SE, USE, and USE-2.

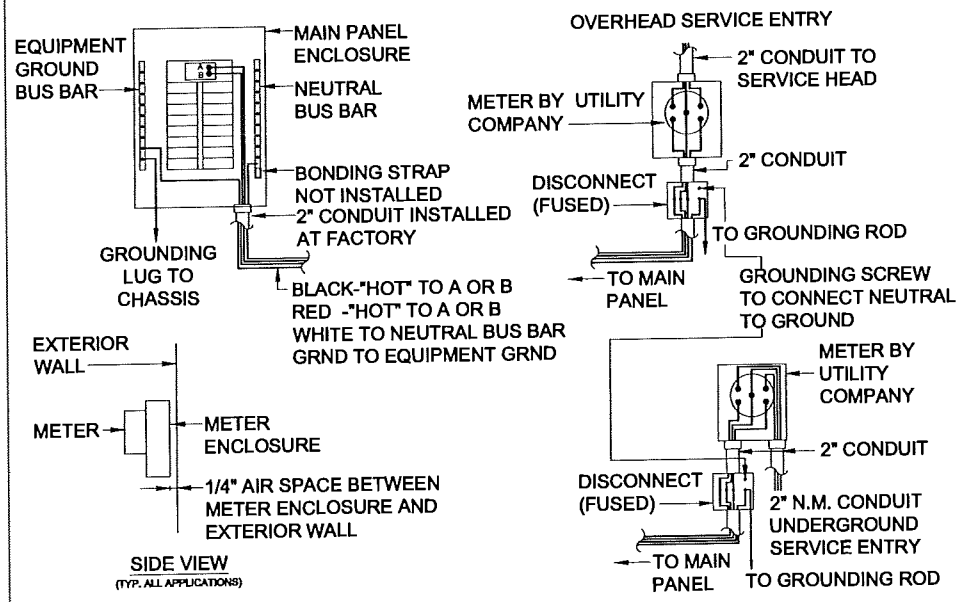

Figure 64. *Electrical feeder connection when meter is on a post or pole or mounted on the home more than 6 feet from the circuit breaker panel.*

Special precautions when installing electrical service. Installation of the electric power to the home can cause exposure to live electrical circuits. The neutral conductor must not be grounded in the distribution panel board. Exposure to live electrical circuits or improper grounding of the conductor in the panel board may result in severe shock or possible electrocution. A qualified installer must make the connections for the electric power.

Power supply. A large enough power supply must be available at the site. An inadequate power supply may result in improper operation of and possible damage to motors and appliances. It may also increase electricity costs.

TABLE 26. ELECTRICAL FEEDER WIRE AND EQUIPMENT SIZES FOR COPPER CONDUCTORS

Main Breaker Size in Panel Box (AMPS)	Max. Neutral Feeder Load (AMPS)	Junction box size	Minimum Size Raceway Conduit Diameter (in)	Conductors			
				Red & Black (Power)	White (Neutral)	Green (Grounding)	Bare Ground
50	35	NA	1	#4 AWG (Cu)	#8 AWG (Cu)	#10 AWG (Cu)	#8 (Cu)
100	70	10 x10 x 4	1-1/4	#4 AWG (Cu)	#4 AWG (Cu)	#8 AWG (Cu)	#8 (Cu)
200	140	10 x16 x 4	2	2/0 AWG (Cu)	1/0 AWG (Cu)	#6 AWG (Cu)	#4 (Cu)
225	158	10 x16 x 4	2	3/0 AWG (Cu)	2/0 AWG (Cu)	#4 AWG (Cu)	#4 (Cu)
400	280	10 x24 x 4	3	400 kcmil (Cu)	300 kcmil (Cu)	#3 AWG (Cu)	1/0 (Cu)

Grounding the electrical system. Do not provide electrical power until the grounding electrode is installed and connected. When the meter base is not on the house never use the neutral conductor of the feeder cable as a ground wire. Do not ground the neutral bar in the electrical distribution panel.

Prior to energizing the home, turn off the water heater until it is completely filled with water.

Grounding

The home must be properly grounded to protect the occupants. The only safe and approved method of grounding the home is through an electrically-isolated grounding bar in the home's distribution panel board. This grounds all non-current-carrying metal parts to the electrical system in the home at a single point. The ground conductor of the power supply feeder cable in turn connects the grounding bar to a good electrical ground back through the power supply system. Therefore, for 120/240 volt service a four wire power supply feeder cable is required. It is important to:

- Isolate (insulate) grounded circuit conductor (neutral or white wire) from the grounding conductors (green wires) and from equipment enclosures and other grounded parts.
- Isolate (insulate) the neutral circuit terminals in the distribution panel board and in ranges, clothes dryers, and counter-mounted cooking units from the equipment enclosure.

Feeder Connections

Feeder connections are made from above or from below the home as follows:

- From above—mast weatherhead feeder. The routing, connection, and support of the service drop must meet local codes. Homes equipped this way contain all necessary conduits to the electrical distribution panel. However, the four feeder conductors (not provided with the home) are installed on site. If the masthead is located above the roof overhang, allow a minimum clearance of eight feet above all roof points that the conductors pass over. There are two exceptions to this rule: (1) The vertical clearance may be reduced to three feet if the roof has a minimum slope of 4 in 12; and (2) The vertical clearance may be reduced to 18 inches if no more than four feet of service-drop conductors pass above the roof overhang, and if they terminate at a through-the-roof raceway or approved support. A minimum clearance must also be provided from the final grade to the service-drop conductors. This measurement may vary from 10 feet to 18 feet, depending on the types of traffic anticipated below the service drop (refer to the NEC). Unless impractical, locate service heads above the point of attachment of the service-drop conductors and make them rain-tight. If individual conductors do not extend downward, form drip loops.
- From below—underside junction box feeder. A section of conduit is factory installed through the floor cavity. Connect to that conduit with approved fittings and conduit (not provided with the home) to the point where the service entrance cable enters the crawl space. Install properly-sized service entrance conductors from the main power supply to the panel board. Depending on the location of the main panelboard inside the home, or the point at which the

service entrance conductors enter the crawl space, a separate service disconnect may be required. Refer to **Table 26** for the conductor and junction box requirements. The installer must provide the supply connection including the four feeder conductors, junction box and conduit connectors. Protect conductors emerging from the ground from a minimum of 18 inches below grade to eight feet above grade, or to the point of entrance to the home. The distance measured from the top surface of a buried cable, conduit, or raceway to the finished grade must meet the minimum burial requirements outlined in the NEC. Use a moisture-proof bushing at the end of the conduit from which the buried cable emerges.

METER MOUNTED ON HOME WITHIN 6 FEET OF CIRCUIT BREAKER PANEL

If the meter is mounted on the home, the following requirements apply (refer to **Figure 65**):

- Use straps to support any conduit. Do not use the meter base equipment for support.
- Use exterior equipment and enclosures listed as weatherproof and entrance conductors listed for wet locations.
- The grounding bar may be installed separate from the neutral bar for purposes of testing the electrical system.
- The grounding bar may be isolated during the electrical check and re-attached, after the tests are completed.
- Check with the local electrical utility to verify meter base requirements and locations and distances for the main panel and meter box.
- The field installed meter base enclosure must be installed in accordance with its listing. Fasten securely to exterior wall studs and provide for a weather tight seal.
- All field work must be done by a licensed electrician or other person approved by the LAHJ.
- Check the local code for any requirements regarding the location of the meter base.

Note that bonding, screws, straps, or buses in the distribution panel board or in appliances have been removed and discarded at the manufacturing facility.

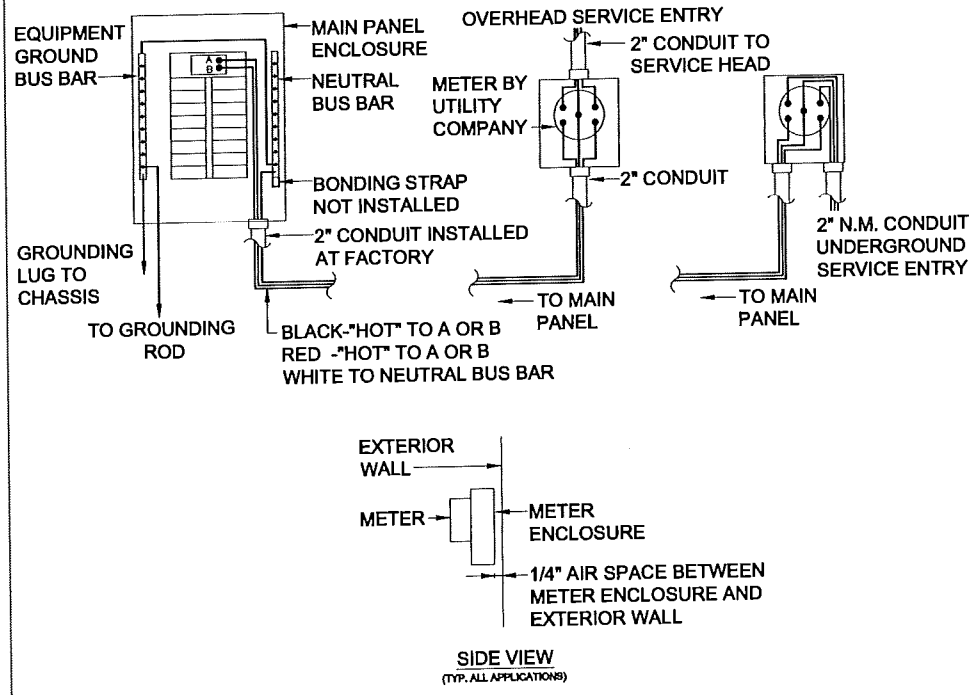

Figure 65. *Meter base wiring when the meter is on the home within 6 feet of Circuit Breaker Panel.*

When a factory installed service meter base is provided on a home, a grounding electrode conductor and a ground wire must be installed according to the following specifications:

1. Grounding wire to be #6 minimum bare copper provided by the manufacturer. If manufacturer provides a minimum 1/2 inch EMT or conduit raceway, the #6 minimum bare copper wire is provided by the retailer for installation.
2. The clamp connecting the grounding wire to the electrode shall be suitable for direct burial and located flush or below ground level.
3. Use a 5/8 inch diameter by eight foot long iron electrode for grounding. Larger sizes may be required by LAHJ.
4. Drive the electrode to a depth of not less than eight feet so that at least eight feet of the electrode is in contact with the soil.
5. When rock is encountered, the electrode may be driven at an angle not to exceed 45 degrees from vertical or buried in a trench that is at least 2-1/2 feet deep.

TESTING

After your home has been completely assembled and all accessories installed, it should be tested to ensure that no damage occurred during transit and that all electrical connections were properly performed (**TEST ELECTRICAL SYSTEM** pg. 111). **These tests should be performed by qualified personnel familiar with the local codes and required test procedures.**

STEP 2. CONNECT WATER SERVICE

CONNECTION

To connect the home's water system to the water source, identify the water inlet located under the home (usually below the water heater compartment or utility room) and follow the procedure described below (refer to **Figure 66**):

1. **Flush pipe.** Flush field installed water piping free of all debris prior to connection to the home's water inlet.
2. **Clean threads.** Ensure that pipe threads are clean.
3. **Install pressure-reducing valve.** If the local water supply exceeds 80 psi install a pressure-reducing valve.
4. **Connect valve.** Install a main shut-off valve between the water supply and the home. Locate the riser for the shutoff valve underneath or adjacent to the home. Select a full flow gate or ball shutoff valve, or equivalent valve. To prevent the possibility of fresh water contamination install an anti-siphon valve on all field installed exterior faucets.

Maximum water pressure. The water system for the home was designed for a maximum inlet pressure of 80 psi.

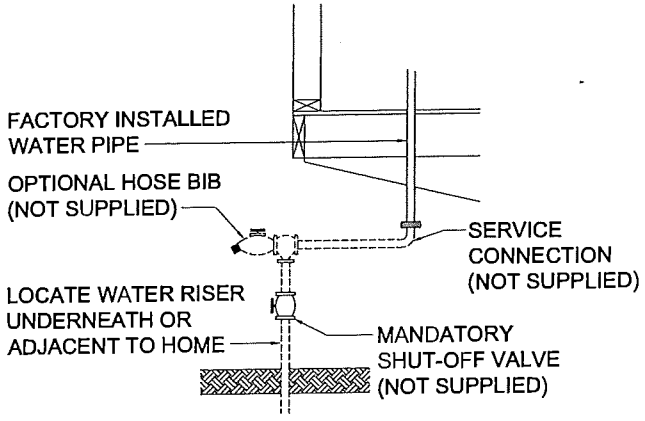

Figure 66. *Water system connection*

5. **Install water heater discharge drain.** Inspect the drain opening on the water heater to ensure that it is clear of any obstruction. Install drain pipe connecting the discharge from the water heater temperature and pressure relief valve to the exterior of the home. Drain pipe cannot connect with the DWV line.

Install water heater drip pan and drain. Assure that the drain for the water heater drip pan does not terminate under the home. Using the materials provided and the accompanying instructions run a drain line from the water heater drip pan through the wall or floor to the exterior of the crawl space. Terminate the line between six and 24 inches above grade. (**Figure 67**). Make the termination point rodent proof.

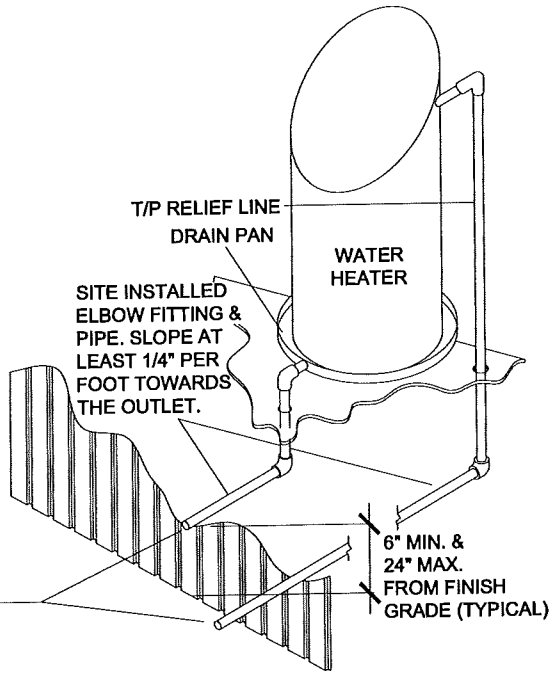

Using check valves. Verify that a check valve has been installed on the water inlet to prevent water system drainage in the event of a loss of water pressure from the source. Such pressure loss could cause the water heater to drain, exposing the heating elements of electric water heaters causing them to fail.

Figure 67. *Water heater drip pan and drain*

6. **Insulate.** In areas subject to freezing temperatures, protect with insulation or heat tape pipes, valves and pressure reducers that are exposed to the outdoors; and pipes in water heater compartments with non-insulated doors. Connect heat tape to the electrical outlet under the home near the water supply inlet. Heat tape must not be installed on the DWV pipe. Electrical outlet provided under the home must only be used for the heat tape connection because it is GFCI protected.

Selecting heat tape. Use only pipe heating cable (tape) listed for manufactured homes, and install it in accordance with the cable (tape) manufacturer installation instructions.

TESTING

After connecting the water lines check the water system for leaks using one of the procedures described below. Before testing, close all water faucets, spigots, and toilet-tank float valves.

Hydrostatic (preferred):

1. **Bypass water heater.** Bypass the water heater by disconnecting the hot outlet and cold inlet water lines from the water heater and joining them together. This will protect the hot water tank from damage and protect those involved in the test from possible injury.
2. **Pressurize system.** Connect a hydrostatic pump, valve and gauge. Pressur-

Testing water lines. Only use pneumatic (air) testing when hydrostatic testing is not practical. Air under pressure is explosive. Exercise extreme caution and notify all site personnel of the test. Wear protective eyewear and take precau-

ize the system with water at 100 psi, and then isolate it from the pressure source. Bleed all air from the highest and farthest points in the system.

3. **Hold pressure.** Monitor the pressure for at least 15 minutes.
4. **Fix leaks.** If the pressure drops below 100 psi, locate and correct any leaks by cutting out and discarding bad pipe sections or joints and installing new pipe or joints with couplings.
5. **Repeat.** Repeat the test until all leaks have been eliminated.

Pneumatic:

1. **Bypass water heater.** Bypass the water heater by disconnecting the hot outlet and cold inlet water lines from the water heater and joining them together. This will protect the hot water tank from damage and protect those involved in the test from possible injury.
2. **Pressurize system.** Connect an air pump and pressure gauge to the water inlet, pressurize the system to 100 psi and isolate the pressure source from the system.
3. **Hold pressure.** Monitor the pressure for least 15 minutes. If the pressure drops below 100 psi, locate any leaks by applying soapy water to the connections and looking for bubbles.
4. **Fix leaks.** Correct any leaks by cutting out and discarding bad pipe sections or joints and installing new pipe or joints with couplings.
5. **Retest.** Repeat the procedure until all leaks have been eliminated.
6. **Restore connections.** Reconnect the water heater and the water supply.

FREEZE PROTECTION FOR UNOCCUPIED HOMES

If the home is to be left unheated in cold weather. Protect water lines from freezing as follows:

1. **Disconnect supply.** Turn off the water supply and disconnect the water supply inlet.
2. **Drain water heater.** Turn off the water heater; if necessary, attach a hose to the valve to direct water away from under the home, open the drain valve and drain the tank completely
3. **Drain faucets.** Open all faucets throughout the home (including the laundry area if plumbed, and any exterior faucets) and let them drain completely.
4. **Drain toilets.** Flush toilets and drain water tanks completely.
5. **Close faucets.** Close all water faucets with the exception of one.
6. **Connect compressor.** Connect a maximum of 30 psi air supply to the water inlet connection using a low pressure compressor.
7. **Open faucets.** With the air supply on the system, open one faucet at a time throughout the home.
8. **Disconnect compressor.** After the entire system has been drained of all water, disconnect the air supply and close the water inlet valve.
9. **Pour anti-freeze.** Pour an RV antifreeze solution into all drain traps, including sinks, tubs and toilets. Be sure that the antifreeze is safe for the fixtures and P-traps.

STEP 3. CONNECT GAS SERVICE

CONNECTION

If the home uses natural or liquid petroleum gas (LPG, also known as propane) for water or space heating, cooking or other appliances, follow the procedure described below:

1. **Inspect vents.** Assure that all exhaust vents on gas-fired equipment are securely connected and that roof jacks and stacks have not come loose during transit and they are properly installed.
2. **Review appliance instructions.** Review each appliance manufacturer's instructions before the home is connected to the gas supply. Most gas appliances are typically configured to operate on natural gas. If the gas supply will be LPG, consult the appliance manufacturer's instructions to determine what

tions to prevent impact damage to the system while the test is in progress. Do not pneumatically test CPVC systems. Pneumatically test Flow Guard Gold systems only at low pressure levels (20 psi or less).

Pressurizing water lines. When pressurizing the water system, connect the pump to a location above a closed shut-off valve so as not to introduce pressure into the municipal water supply.

Anti-Scald Valves. Anti Scald valves have been installed on all tubs, tub/showers and showers in the home. The valves are preset by the valve manufacturer to about 105°F (41°C). After the water lines have been flushed, the outlet temperature at each tub, tub/shower and shower must be tested to ensure that it does not exceed 120°F (49°C). Water should run for at least one minute on the hottest setting before taking the temperature reading. Some customer's may desire temperatures higher than 105°F (41°C). Temperature may be adjusted using the instructions provided with the valve. In no case should the temperature exceed 120°F (49°C) as this may result in serious bodily harm and/or death.

Installing gas lines. Only qualified professionals may connect and test gas service.

what changes need to be made. For homes located above 3,000 feet, appliances may require a different orifice.

3. **Remove cap.** Remove the protective cap from home inlet pipe and install a full flow shut-off valve at the supply inlet (**Figure 68**).
4. **Install regulator.** The gas piping system is designed for a pressure that is at least seven inches of water column (4 oz. per sq in or 0.25 psi) but not more than 14 inches of water column (8 oz. per sq in or 0.5 psi). If gas from any supply source exceeds, or could exceed this pressure, install a regulator if required by the LAHJ.
5. **Connect supply.** Using matching threaded fittings connect the gas supply to the inlet side of the shut-off valve.
6. **Close valves.** Close all valves at appliances prior to opening the main supply valve.

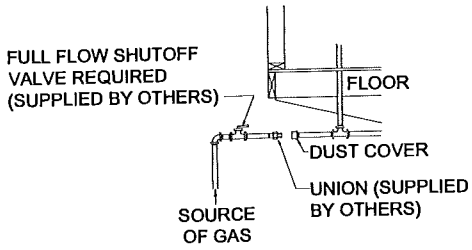

Figure 68. *Gas service connection*

TESTING

Test the gas piping system in the following two ways: 1) piping only and 2) entire system. Consult with the LAHJ for any additional testing or start-up requirements.

Before testing begins, the temperature of the ambient air and the piping should be approximately the same. Conduct the tests when and where air temperatures will remain constant.

Piping only test (all appliances isolated)

1. **Isolate appliances.** Isolate all appliances from the system by closing all appliance shut-off valves.
2. **Attach gauge.** Attach to the home's gas inlet a mercury manometer or slope gauge calibrated in increments of not more than 1/10 lb.
3. **Pressurize system.** Using an air compressor, pressurize the system with compressed air to three psi and isolate the pressure source from the system.
4. **Monitor pressure.** Monitor the pressure for at least 10 minutes.
5. **Check for leaks.** If pressure drops below three psi, check for leaks by applying a non-corrosive, ammonia-free gas leak detection fluid to the joints at all valves, appliance connections and crossover connections (do not use dish washing detergents, soap or other household chemicals). If bubbles form, tighten the connection and recheck.
6. **Repair leaks.** If leaks persist, replace defective pipes or fittings with sound material and retest.
7. **Release pressure.** Release pressure and open all appliance shut-off valves.
8. **Rinse connections.** Thoroughly rinse all tested connections with water to remove leak detection fluid.

Entire system test (with appliances)

1. **Close appliances.** Close all gas equipment controls and pilot light valves according to the individual gas equipment manufacturer's instructions.
2. **Open valves.** Assure that gas shut-off valves for all gas equipment are in the open position.
3. **Attach gauge.** Attach to the home's gas inlet a pressure gauge calibrated in ounces.
4. **Pressurize system.** Pressurize the system with compressed air to six to eight ounces (3/8 to 1/2 psi, or 10 to 14 inches of water column).
5. **Check for leaks.** Check for leaks as described above in step 4 of the Piping

only test. Replace defective pipes or fittings with sound material and re-test.

6. **Rinse connections.** Thoroughly rinse all tested connections with water to remove leak detection fluid.

GAS APPLIANCE START-UP

Open the shut-off valve for each appliance and adjust the burners according to the appliance manufacturer's instructions. Verify that the furnace and water heater thermostats are operating properly and set them to the desired temperatures.

STEP 4. CONNECT OIL SERVICE

Homes that are equipped with oil burning furnaces must have oil supply piping installed and tested on site by a qualified professional in accordance with NFPA 31, Standard for the Installation of Oil Burning Equipment, 2001 or the requirements of the LAHJ, whichever is more stringent. The home manufacturer does not supply oil piping or tanks.

OIL CONNECTION

Consult the furnace manufacturer's instructions for proper pipe sizing and installation procedures. Where piping is run through the bottom of the home, ensure all holes in the bottom board are sealed tight with foam, mastic, and/or tape specially made for that purpose and made rodent proof.

When equipping the home with an oil storage tank, comply with the following:

- Install the pipe with a gradual slope toward the fill end or drain plug (if so equipped) to facilitate pumping or draining of water and sludge.
- Provide a readily accessible approved manual shut-off valve at the outlet, installed to close against the supply.
- Equip the tank with an approved oil filter or strainer located downstream from the tank shut-off valve. Use a filter or strainer containing a sump with a drain to trap water.
- Equip under ground tanks with a filler neck extending one foot above grade and a minimum 1-1/4 inch diameter vent pipe extending at least two feet above grade.
- Locate the tank to be accessible for service and inspection, and safe from fire and other hazards.
- If the tank is located inside a compartment of the home, provide ventilation at the bottom of the compartment to permit diffusion of vapors. If the tank is fixed to the home, provide for filling and draining from the outside.
- Insulate interior tanks from the structural members of the home. Provide tanks so installed with an outside fill and vent pipe and an approved liquid level gauge.
- Install tanks that feed vaporizing type oil furnaces so that oil flows by gravity. To achieve efficient gravity flow, make sure that the bottom of the tank is at least 18 inches above the furnace oil control level.
- Tanks for gun type oil furnaces (these furnaces include a fuel pump) may be installed above or below ground.

OIL SYSTEM TESTING

Before operating the system, fill the tank to capacity with the fuel to be burned and visually check all joints in the system for leakage. Replace (do not repair) parts that leak.

Fill gas water heaters. Before lighting the pilot on a gas powered water heater, fill the tank with water. Failure to do so could damage the water heater.

Testing oil tanks. All oil storage tank and piping installations and tests must meet all applicable local regulations and should be made only by experienced, qualified personnel.

▶ go to Prepare Appliances and Equipment (p. 103)

Prepare Appliances and Equipment

This chapter provides instructions for installing and/or preparing appliances and other equipment. While the items below can be completed in any order, the last item, **TEST ELECTRICAL SYSTEM,** must be done last.

Follow the Steps below:

- ▼ **INSTALL AIR CONDITIONER OR HEAT PUMP** (p. 103)
- ▼ **PREPARE HEATING SYSTEM** (p. 104)
- ▼ **INSTALL REMOTE HEATING AND COOLING EQUIPMENT** (p. 104)
- ▼ **PREPARE WHOLE HOUSE VENTILATION SYSTEM** (p. 105)
- ▼ **PREPARE CLOTHES DRYER** (p. 105)
- ▼ **PREPARE SMOKE ALARMS** (p. 106)
- ▼ **PREPARE FIREPLACES** (p. 107)
- ▼ **PREPARE KITCHEN AND BATH APPLIANCES / FIXTURES** (p. 108)
- ▼ **INSTALL EXTERIOR LIGHTING** (p. 109)
- ▼ **INSTALL CEILING FANS AND LIGHTING** (p. 109)
- ▼ **TEST ELECTRICAL SYSTEM** (p. 111)

INSTALL AIR CONDITIONER OR HEAT PUMP (if applicable)

CENTRAL UNITS

Install split system or unitary central air conditioners and/or heat pumps as follows:

1. **Check suitability.** Check the home's Comfort Cooling Certificate (may be included with the data plate) to confirm that the home is suitable for installation of central air. If so, note the air distribution system's rated duct capacity (BTU/hr), any equipment sizing guidance provided by the manufacturer and information provided to calculate the home's heat gain.
2. **Select equipment.** Select equipment with a rated heating capacity (BTU/hr) not exceeding the maximum indicated on the home's data plate and a rated cooling capacity sized in accordance with Chapter 28 of the 1997 ASHRAE Handbook of Fundamentals or ACCA Manual J, Residential Cooling Load, 8th edition. Information necessary to calculate the heat gain of the home is located on the Data Plate. Sizing recommendations may also be obtained by utilizing the Manufactured Housing Research Alliance Cooling Equipment Sizing Guidelines available at www.mhrahome.org (Located in **Appendix B**). Choose equipment with a minimum circuit amperage (found on the equipment rating plate) no greater than the branch circuit rating of the exterior air conditioning receptacle (indicated on the adjacent tag), if present.
3. **Install A-coil.** When installing a cooling A-coil in a down-flow furnace that incorporates a fresh air intake duct, position the duct in the furnace cavity according to the furnace manufacturer's instructions (**Figure 69**). For electric down-flow furnaces, trim the whole house ventilation duct as needed to allow installation of the A-coil and secure the duct to the wall of the compartment or to the top of the A-coil. Do not restrict the flex duct opening, allow the duct insulation to contact the A-coil, or allow the duct to become kinked, restricted or configured to form a trap.

Use listed appliances. All applicable appliances must be listed or certified by a nationally recognized testing agency for the application for which the unit is intended and installed in accordance with the terms of its listing or certification.

Properly sizing equipment. Oversized cooling equipment can lower energy efficiency, reduce comfort, shorten equipment life and may cause moisture problems in the home (including potentially damaging the home's structure). Sizing guidance is provided by the Manufactured Housing Research Alliance Cooling Equipment Sizing Guidelines available at www.mhrahome.org.

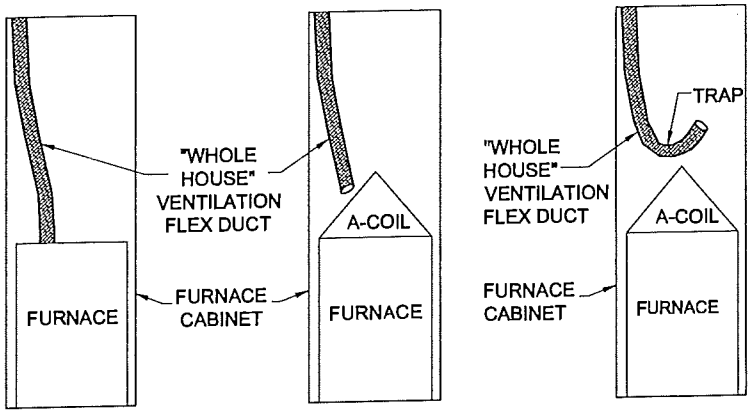

Figure 69. *Whole house ventilation flex duct in an electric down-flow furnace. From left to right: as prepared in the factory; proper installation with A-coil; improper installation with A-coil*

4. **Connect to Power.** Connect cooling equipment to the power supply in accordance with all manufacturer's instructions and local codes.
5. **Direct Runoff.** Direct condensate runoff from cooling equipment away from the home and so that it does not collect under the home.

PREPARE HEATING SYSTEM

If the home does not contain a factory installed heating appliance, install a remote heating appliance according to **INSTALL REMOTE HEATING AND COOLING EQUIPMENT**, p. 104. Prepare fuel-burning heating systems included with the home as follows:

1. **Inspect for damage.** Inspect the furnace and report any damage to the home manufacturer.
2. **High altitude.** If the home is located more than 2,000 feet above sea level or as indicated in the furnace manufacturer's instructions, derate gas furnaces 4% for each 1,000 feet above sea level. This work must be done by a qualified (and in some jurisdictions, licensed) technician.
3. **Convert for LP gas.** If LP gas (propane) will be used, convert the appliance from natural gas to LP gas use. Conversion must be made by a qualified and (if required by the LAHJ) licensed technician.
4. **Install intake air pipe.** Consult the appliance manufacturer's instructions for maximum allowable pipe run length, requirements for air dampers, locations relative to expected snow levels (check with the LAHJ for expected snow levels), acceptable materials, pipe supports, and pipe termination requirements.
5. **Install flue.** For combustion appliances, install the flue roof cap and stack assembly as described in the manufacturer's installation instructions.

INSTALL REMOTE HEATING AND COOLING EQUIPMENT

Install remote units in compliance with all heating and cooling equipment requirements in this chapter above and the following:

1. **Locate connections to the home.** Find the manufacturer-installed connectors, labels or tags under the home indicating the required connection points for supply and return air. If connectors are not provided nor location indicated, select a supply duct location such that there are approximately equal numbers of supply registers forward and rear of the connection point. It is recommended that the exterior heating and/or cooling equipment be centrally located on the back side of the home.
2. **Install ducts.** Install the appropriate supply and return ducts (not provided) between the remote unit and the home (**Figure 71**), making connections according to the instructions for crossover ducts in **Connect Crossovers** (p. 61).
3. **Install dampers.** If installing a remote cooling unit in a home with a factory installed furnace, install dampers between the furnace and the home's air duct system, and between the remote unit and the home's air duct system to prevent warm air in heating mode from escaping to the remote cooling unit and vice versa.
4. **Connect wiring.** Install a thermostat containing a fan switch. Connect utilities in accordance with all manufacturer's instructions and local codes. Wiring shall be

Selecting A-coils. Use only A-coil units compatible and listed for use with the furnace in the home and installed in accordance with the furnace manufacturer's instructions.

Installing flue stacks with a hinged roof. If flue stack components are installed above the finish roof line (as is often the case with hinged roofs), an Alternative Construction letter is normally required along with a follow-up inspection. Contact the factory for guidance.

Venting appliances to the outside. Vent to the exterior of the home all combustion appliances except ranges and ovens.

Selecting ducts. Exterior ductwork for remote units must be provided by the installer or HVAC contractor. Ducts must be approved for exterior installation and should be wrapped with insulation of at least R-8 under a vapor barrier with a perm rating of not greater than one. (For ENERGY STAR homes, the R-value must be at least that specified on the manufacturer's ENERGY STAR Site Installation Checklist— a minimum of R-8.)

per the installation instructions provided by the manufacturer.

5. **Seal penetrations.** Repair or replace all floor insulation disturbed during the duct installation and seal holes in the bottom board using foam, mastic or tape specially made for that purpose.

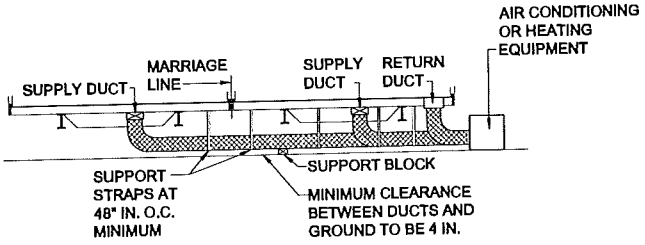

Figure 71. *Ducts connecting exterior heating and/or cooling equipment to the home*

Compressed Duct. Support the duct without compressing the insulation and restricting airflow.

PREPARE WHOLE HOUSE VENTILATION SYSTEM

Prepare the whole-house ventilation system according to the ventilation system manufacturer's instructions. Confirm that any fresh air intake ducts extend to the exterior and do not draw air from the crawlspace under the home. Do not allow any fresh air ventilation intake ducts to become kinked or restricted, forming a trap.

Choosing pipe lengths. The appliance manufacturer may designate the length of the pipe run based on the pipe diameter and the number of turns in the pipe run.

PREPARE CLOTHES DRYER

DRYER VENTS

If the home includes a clothes dryer, the components for ventilating the dryer are included with the home (but not necessarily installed) and a vent opening has been roughed in either in the wall or floor. (If a dryer is not installed, seal all dryer vent openings).

Run the dryer vent to the outside through the exterior wall or through the floor to a point beyond the perimeter of the home, using materials approved by the clothes dryer manufacturer (see **Figure 72**).

Venting exhaust systems. Exhaust vents must extend to the home's exterior through skirting. Termination of the dryer exhaust underneath the home can cause condensation and moisture damage to the home. Lint and dust accumulation can ignite, causing a fire.

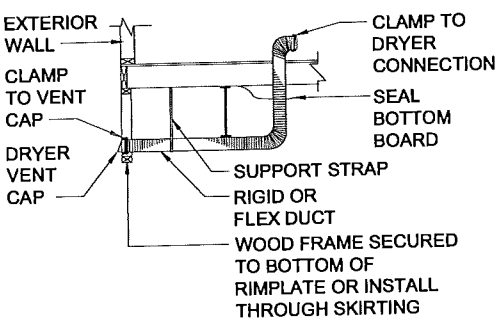

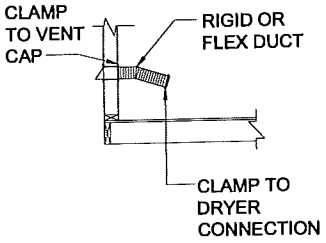

Figure 72. *Clothes dryer ventilation ductwork through floor (left) or exterior wall (right)*

Install the vent as follows:

1. **Remove temporary caps.** Remove any temporary seals and duct caps from the vent rough openings.
2. **Install ductwork.** Install ductwork using clamps (do not use screws or other fasteners that penetrate into the duct) and support the duct with metal straps connected to the floor joists or chassis at two feet o.c. or less. Ensure duct connections are internally overlapped to prevent inhibiting the flow of air and thereby causing lint accumulation.

Avoid damaging structural elements. Do not cut or otherwise damage structural elements such as floor joists or wall studs for the installation of the dryer exhaust system.

3. **Install cap and damper.** Install an approved dryer vent cap with damper on the exterior termination of the duct. If the vent terminates at skirting, secure the cap to framing or skirting with sheet metal screws and seal edges with caulk or sealant. If the vent terminates through a wall, apply a bead of sealant to the back of the cap around the opening and secure with sheet metal screws to metal, hardboard or fiber cement siding or with wood screws to a mount block for vinyl siding.
4. **Seal opening.** Seal openings inside and outside of the home including at the floor, interior walls, siding and skirting (with caulk) and at the bottom board using foam, mastic and/or tape specially made for that purpose.

GAS DRYERS

If the home was not fitted for a gas dryer, installing one requires substantial alteration to the home. Gas supply piping and adequate venting must be provided as specified by the dryer manufacturer and installed by a trained professional. Do not cut major structural elements to accommodate a gas dryer.

PREPARE SMOKE ALARMS

The home has several factory installed smoke alarms that are wired to a 120 volt circuit. If the home was designed for placement on a basement, an additional alarm is provided for installation at a pre-wired location under the home. Connect the basement smoke alarm and test all alarms as follows:

1. **Check circuit.** Ensure that the batteries are installed and the electrical power to the home is activated and that the smoke alarm circuit is on.
2. **Test alarms.** Press the **"test"** button on the alarm and hold for 5 seconds (or until the alarm sounds). When the alarm begins to sound, release and confirm that each alarm in the home is sounding. Replace (with the same brand as those installed elsewhere in the home) any alarms that do not sound and retest.
3. **Disconnect AC.** With the AC current disconnected and batteries installed, test for DC operation following the same procedure as shown in step 1.

Both steps 1 and 2 above must be conducted on each alarm installed in the home. If any alarm fails to sound during the test, turn off the power at the main panel box and check the wiring. Make any necessary repairs and conduct a complete re-test. Repeat if necessary until all alarms are functioning properly.

Gas. Ventilation components that may be included with the home for an electric dryer may not be acceptable for gas dryers. Consult the gas dryer manufacturer instructions.

Installing ducts. Keep ductwork straight and smooth as possible without excess slack. Slope it slightly downward towards the exterior to facilitate moisture drainage.

PREPARE FIREPLACES

Install chimneys, chimney flashing and roofing, fireplace combustion air inlets and hearths according to the manufacturer's instructions and the procedures described below.

CHIMNEYS

Fireplace and wood stoves may require on-site installation of additional sections of approved chimney pipe, a spark arrestor and a rain cap assembly. Follow the manufacturer's instructions and the procedures described below:

1. **Remove coverings.** Remove protective materials covering the roof flashing and any foreign material from the installed part of the chimney.
2. **Install chimney pipe.** Assemble and seal the chimney per the fireplace or wood stove manufacturer's installation instructions and if there is a conflict between the instructions and the figure, follow the instructions. To assure sufficient draft for proper operation, extend the chimney at least three feet above the highest point where it penetrates the roof and at least two feet higher than any surface within 10 feet of the chimney (**Figure 73**). Use additional section(s) of chimney pipe (not provided) if required by local code or if the site has obstructions within 10 feet of the chimney.

Fireplaces and wood stoves not provided by the home manufacturer, including chimneys and air inlets for fireplaces and wood stoves must be listed for use with manufactured homes and must be installed in accordance with their listings.

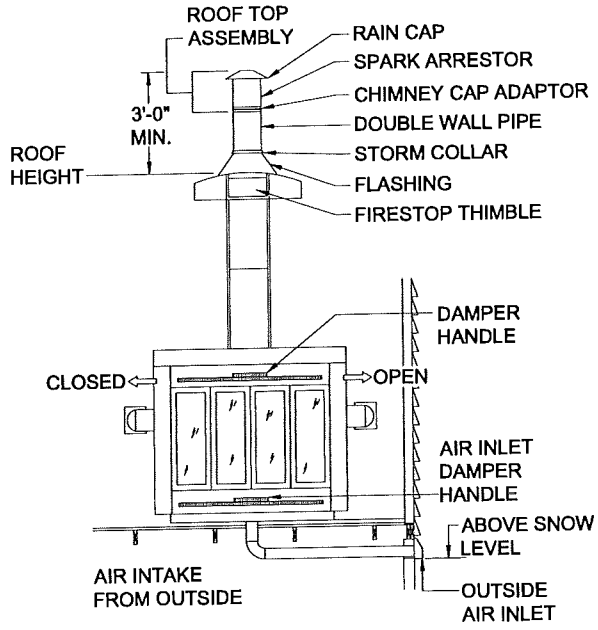

Figure 73. *Chimney and combustion air intake duct installation*

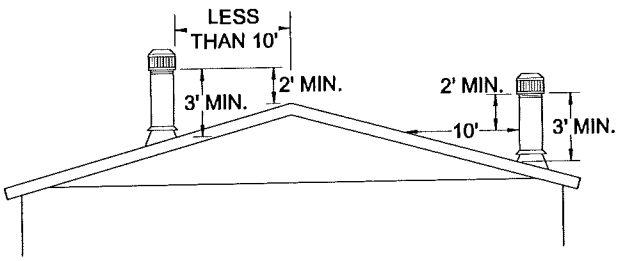

Figure 74. *Chimney clearance*

Selecting the appropriate flue. Wood fireplaces use larger diameter flues than gas fireplaces. Make sure flue matches the appliance type. Gas fireplaces cannot burn wood because the flue is too small and smoke will back up into the home.

3. **Install shingles.** Install shingles up to the edge of the flue cut-out in the roof

deck. Secure shingles installed under the roof flashing with asphalt cement.

4. **Install flashing.** Place flashing over pipe section and shingles and set in asphalt cement. Secure flashing to roof deck at top two corners with roofing nails.
5. **Complete shingles.** Cut shingles in successive courses to fit around the pipe and embed them in asphalt cement where they overlap the flashing. Secure shingles with roofing nails through flashing and apply asphalt cement over nail heads. The completed installation should appear as shown in **Figure 75**, with the lower part of the flange overlapping the lower shingles and the side and upper shingles overlapping the flange.

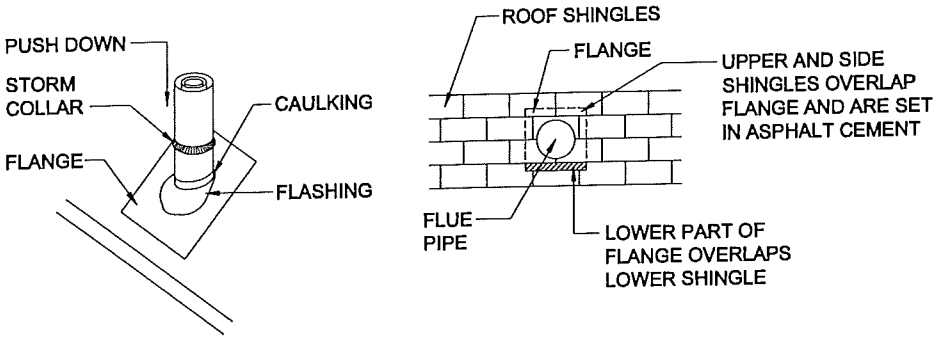

Figure 75. Roof flashing and shingle installation around chimney

COMBUSTION AIR INLETS

Combustion air inlets provide combustion air through the floor or an exterior wall to a combustion appliance. If installed through an exterior wall, no further site installation is required. If through the floor, extend the duct from its point just below the floor to the outside. Locate the outside air inlet above expected snow levels (contact the LAHJ for snow levels).

Follow the fireplace manufacturer's instructions (typically in the fireplace/stove or with the chimney parts).

HEARTHS

If shipped loose, install the fireplace hearth according to the fireplace manufacturer's instructions.

PREPARE KITCHEN AND BATH APPLIANCES / FIXTURES

Install kitchen and bath appliances according to the manufacturer's instructions and the procedures described for each appliance below.

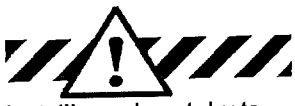

Installing exhaust ducts. Route exhaust ducts so they do not terminate beneath the home.

COOKING APPLIANCES

If the home is provided with a range, cook top and/or grill containing its own exhaust system that penetrates the floor, complete the exhaust system as follows:

1. Remove covers. Remove the cover on the factory installed exhaust pipe protruding from beneath the floor near the appliance.
2. Install termination fitting. Secure the provided termination fitting at the outside edge of the floor.
3. Install duct. Use the provided flexible metallic duct to connect the elbow protruding from the floor and the termination fitting. Refer to the manufacturer's installation instructions for guidance on supporting the duct and making the connections.

SITE-INSTALLED GAS APPLIANCES

Install only appliances with a Btu capacity equivalent to or less than the capacity of the factory-installed piping and at the location of a factory-installed gas riser.

REFRIGERATOR

Prepare the refrigerator as follows:

- Remove straps, blocks or other securement devices used for shipping and patch any resulting marks on floors or walls.
- If the refrigerator has an icemaker, check water lines for leaks upon installation and a few days later to make sure no leaks have developed.

SITE-INSTALLED APPLIANCES AND FIXTURES

If sinks, tubs, showers or other fixtures or appliances are to be site-installed, follow the manufacturer's installation instructions. Use only products listed for use in manufactured homes and follow all applicable local codes.

INSTALL EXTERIOR LIGHTING

Install exterior lighting according to **Figure 76** and the following:

1. **Remove cover.** Remove the screws and cover from electrical junction box.
2. **Install flash ring.** Place the non-combustible flash ring over the junction box.
3. **Connect wires.** Connect fixture wires to house wires in the box, black to black, white to white and equipment ground to equipment ground, using listed wire connectors. Push wires into the box.
4. **Connect fixtures.** Connect the fixture to the junction box or strap using screws provided with the light fixture.
5. **Weatherproof.** Weatherproof/caulk around the base of the fixture, leaving a small gap in the caulking on the bottom to permit drainage of water that may accumulate.
6. **Complete installation.** Install bulb and globe on the fixture and verify proper operation.

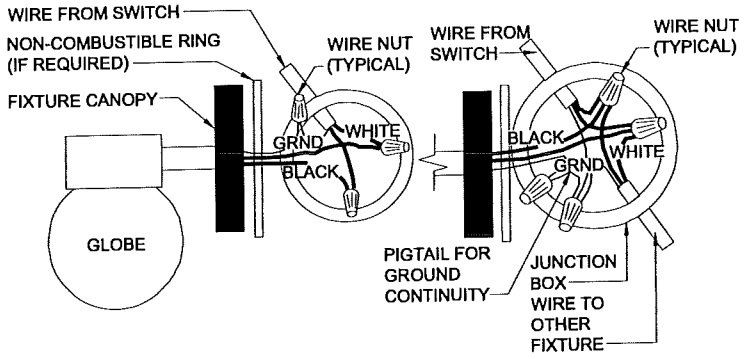

INSTALL CEILING FANS/LIGHTS

Install ceiling fans no closer than 36 inches, measured from the tip of the fan blade to the nearest side of the smoke alarm and with the trailing edges of the blades at least six feet-four inches above the finished floor. Comply with all unit manufacturer's instructions and the requirements below.

CEILING FAN/LIGHT MOUNTED TO FACTORY INSTALLED ELECTRICAL BOX IN CEILING

Before installing the unit, make sure that adequate structural bracing is present in the ceiling. If uncertain, check with the manufacturer. Follow the fan or light manufacturer's instructions to connect the unit and complete the wiring. If the instructions are not available, connect the wiring as shown in **Figure 77**.

Lighting installation. A qualified electrician should install lighting. Before connecting lighting, disconnect power to the lighting circuit. Ground all exterior light fixtures.

Using a non-combustible ring. Install a non-combustible ring completely covering any combustible surfaces the fixtures may be mounted on (e.g. hard-board, clad wood and vinyl siding), or when ceiling material is exposed between the light fixture canopy and the junction box.

Figure 76. *Exterior lighting connection*

Installing ceiling fans. A qualified electrician should install lighting and fans. Before connecting the ceiling fan or light, disconnect power to the fan wires. Any unit installed outside of the home (such as in a porch ceiling) shall be listed for wet locations.

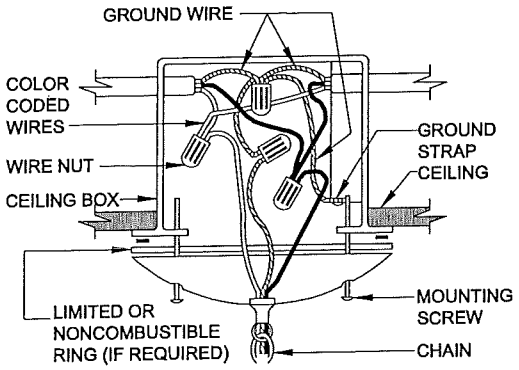

Figure 77. *Wiring for a ceiling fan or chain-hung light fixture with a maximum weight of 35 lbs*

CEILING FAN/LIGHT MOUNTED ON SITE-INSTALLED DECORATIVE BEAM

Where the electrical box will be mounted in a site-installed decorative center beam attached to the ridge beam, connect the fixture as follows (see **Figure 78**):

1. **Cut hole.** If the decorative beam (shipped loose) does not contain a precut hole for the electrical box, cut a hole with a diameter approximately 1/4 inch larger than the box's using a hole saw. Align the hole with the supply wire location and center on the beam.
2. **Install box.** Install the box in the hole and secure the flange (plastic boxes only) to the decorative beam with four #6 x 1" screws.
3. **Insert wire.** Insert the ceiling wire through a knock out hole in the side of the electrical box. It may be necessary to cut a notch in the top of the decorative beam (on the supply wire side of the center beam hole) allowing the supply wire to be inserted into the electrical box without binding against the beam during installation. Leave approximately four inches of wire free in the box.
4. **Attach beam.** Secure the decorative beam in place over the center line joint, checking that the supply wire is not pinched or penetrated by beam fasteners. Secure the electrical box to the ridge beam with #8 x 2 1/2" wood screws through the two holes in the top of the box.
5. **Strip wires.** Strip about 3/4 inch of insulation from the white and black conductor ends of the supply wire.
6. **Position ring.** Position the non-combustible flash ring (provided) over the electrical box so that the finished surface (adjacent to electrical box), which is to be covered by the fan canopy, is not exposed.
7. **Install and wire unit.** Follow the unit manufacturer's installation instructions for mounting the fan/light assembly to the box and for electrical wiring. Use provided electrical connectors for splicing wire.

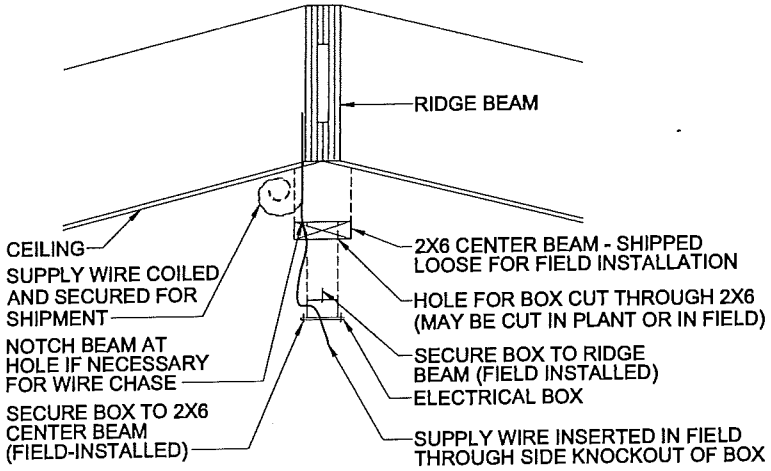

Figure 78. *Ceiling fan/light mounted to flush ridge beam*

Choosing ceiling fan junction boxes. Connect ceiling fans only to junction boxes listed and marked for ceiling fan application in accordance with Article 314.27(b) of 2005 NEC. Always ground metal junction boxes.

Selecting fan weight. Do not use any ceiling fans or light fixtures that exceed the weight rating of the box (35 lbs unless otherwise noted).

Grounding electrical devices. Ground fans/lights using a fixture-grounding device or a fixture-grounding wire as specified in the manufacturer's instructions.

TEST ELECTRICAL SYSTEM

After completion of all electrical wiring and connections, including crossovers, appliances, lights, and ceiling fans, inspect and test the electrical system as follows:

1. **Fill water heater.** Fill water heater before turning on power to the home or switching on the circuit breaker.
2. **Test continuity.** Before turning on the electrical power to the home, conduct an electrical continuity test to ensure that exposed metallic parts of the home and the chassis are effectively bonded.
3. **Test operation.** After turning on the electrical power to the home, conduct operational tests of all devices to demonstrate that they are connected and in working order.
4. **Test polarity.** After turning on the electrical power to the home, conduct electrical polarity checks to determine that connections of electrical equipment installed or completed during installation have been made properly. Visual verification is an acceptable electrical polarity check for these on-site connections.

▶ go to **Complete Exterior Work** (p. 112).

Complete Exterior Work

This chapter covers sealing the bottom board, installing the ground cover and skirting, preparing wind protection shutters and completing site built structures.

Follow the Steps below:

- STEP 1. REPAIR AND SEAL BOTTOM BOARD (p. 112)
- STEP 2. INSTALL GROUND MOISTURE RETARDER (p. 112)
- STEP 3. INSTALL SKIRTING (p. 113)
- STEP 4. ASSEMBLE OPTIONAL WIND PROTECTION SHUTTERS (p. 114)
- STEP 5. COMPLETE SITE BUILT STRUCTURES (p. 114)

STEP 1. REPAIR AND SEAL BOTTOM BOARD

Tears and openings in the bottom board can result from transportation or installation activities. Inspect for holes and gaps in the entire bottom board, especially areas around service penetrations, crossover connections, pipe and duct hangers, foundation elements and the perimeter of the floor. Using approved materials appropriate for the type of repair, repair the bottom board wherever torn or loosened as follows:

1. **Insulate.** Replace any missing insulation prior to closure and repair of the bottom board, paying particular attention to insulation gaps that may have been created at P-traps.
2. **Repair large openings.** Repair large openings with a durable patch made of bottom board fabric or other compatible material and fastened with vinyl bottom board tape held in place by fasteners installed with a divergent stapler. Seal the edges around patches with foam or mastic. For large openings, install a rigid backer board behind the bottom board to provide a fastening substrate for the patch.
3. **Repair small openings**. Repair small gaps and tears with vinyl bottom board tape, patches, adhesive/mastic or foam sealant.

Alternate materials may be used to repair and seal the bottom board provided they are appropriate for the type of repair and installed per the manufacturer's installation instructions.

STEP 2. INSTALL GROUND MOISTURE RETARDER

If the space under the home is to be enclosed with skirting or other materials, a ground moisture retarder of a minimum six mil thick polyethylene sheeting or equivalent must be installed covering the ground under the home. Moisture retarders are not required in arid regions (less than 15 inches of rainfall annually) with dry soil conditions. If on-grade (surface) footings are used, install the ground moisture retarder prior to placing the footings, or install it around the footings after all other work under the home is complete.

Install the ground moisture retarder as follows:

1. **Apply sheeting.** Unroll the ground moisture overlapping joints in the sheeting a minimum of 12 inches and covering the entire area under the home except for areas under recessed entries, decks and porches.
2. **Repair tears.** Repair any large voids or tears in the retarder by patching with like material, maintaining a minimum 12 inch overlap, secured with tape or adhesive. Repair small voids and tears with tape, adhesive or per manufacturer's installation instructions.

Sealing bottom boards. A continuous and sealed bottom board is critical for home performance, energy efficiency, protection against moisture problems, prevention of pipe freezing and protection against insects and rodents

Bottom board sealing methods. Tapes shall never be used alone to repair a large opening in the bottom board. Divergent staples or mastic must be used in tandem with tape to prevent future tear off.

Fastening vinyl siding. Do not install fasteners directly into vinyl siding. Allow for siding thermal expansion by pre-drilling minimum 1/2 inch diameter fastener holes or fastening skirting to a ledger under the home (see Best Practice tip).

STEP 3. INSTALL SKIRTING

Skirting is any structural or non-structural perimeter crawlspace enclosure. Complete site built structures (see **STEP 5. COMPLETE SITE BUILT STRUCTURES**, p.114) that abut the home (such as porches, attached garages and steps) prior to installing skirting.

TABLE 27. SKIRTING AND VENTILATION SPECIFICATIONS

Component	Specification
Skirting	Skirting must be of weather-resistant materials or provided with protection against weather deterioration at least equivalent to that provided by a coating of zinc on steel of not less than 0.30 oz per sq ft of surface coated. Skirting made from wood or wood products and used within six inches of the ground need to be made of materials naturally resistant to decay and termite infestation or pressure treated.
Vents	Ventilation openings must be covered for their full height and width with a perforated (1/4 inch maximum opening in any dimension) corrosion and weather resistant covering that is designed to prevent the entry of rodents. In areas subject to freezing, the coverings for the ventilation openings must have an operable damper, permitting them to be in the open or closed position depending on the weather.

To design and install skirting, comply with the skirting manufacturer's instructions (if provided) and the following:

1. **Configure skirting.** Run the skirting along the perimeter of the home's heated, conditioned space. Do not enclose with skirting areas under recessed entries, porches or decks (whether constructed as part of the home or added on site) unless skirting is of the fully vented type and installed so as to allow water to freely flow out from under the home.
2. **Fasten skirting.** Attach it to the home in a manner that prevents water from being trapped between the siding or trim and the skirting. Allow for frost heave when installing skirting in areas subject to frost.
3. **Provide ventilation.** Unless the skirting has integral ventilation openings that meet the following ventilation requirements, install equally sized ventilation openings on at least two opposite sides of the foundation. Size ventilation area to equal at least one square foot for each 150 square feet of under-floor area (or for each 1,500 square feet if a ground moisture retarder is installed according to **STEP 2. INSTALL GROUND MOISTURE RETARDER**, p. 112). The ventilation area must be the net free area of the foundation vent, not the area of the foundation opening. Place vents as high above the ground as practical.

TABLE 28 FOUNDATION VENTILATION

One Square Foot of Vent per 150 Square Feet of Under-Floor Area

Total Home Sq. Feet	Sq. Feet of Vents Required	Total Home Sq. Feet	Sq. Feet of Vents Required	Total Home Sq. Feet	Sq. Feet of Vents Required	Total Home Sq. Feet	Sq. Feet of Vents Required	Total Home Sq. Feet	Sq. Feet of Vents Required
500	3.33	1000	6.67	1500	10.00	2000	13.33	2500	16.67
600	4.00	1100	7.33	1600	10.67	2100	14.00	2600	17.33
700	4.67	1200	8.00	1700	11.33	2200	14.67	2700	18.00
800	5.33	1300	8.67	1800	12.00	2300	15.33	2800	18.67

4. **Install access.** Provide an access opening not less than 18 inches wide and 24 inches high (minimum 3 square feet in area) and located so that any utility connections located under the home are accessible.
5. **Extend vents, drains and inlets.** Run appliance exhaust vents, combustion air inlets and air conditioner condensation drains through the skirting to the outside and terminate each as instructed in the sections of this manual corresponding to each appliance.

Attaching vinyl skirting. Attach skirting to the home, but allow for contraction and expansion characteristics of the skirting material.

Avoid backfilling against skirting. Do not backfill against non-structural skirting.

STEP 4. ASSEMBLE OPTIONAL WIND PROTECTION SHUTTERS

If desired, prepare temporary protective window covers for use during severe wind storms and hurricanes according to **Appendix C.**

STEP 5. COMPLETE SITE BUILT STRUCTURES

Install site built structures such as steps, landings, garages, awnings, carports, breezeways, porches, decks, railings, sheds and utility rooms according to manufacturer's instructions (if any), in compliance with all local regulations including fire separation and electrical requirements, and according to the following:

- Do not obstruct any of the egress windows or the two required exit doors from the home.
- The addition must be entirely self-supported and cannot rely on the home for support (superficial connections are acceptable). The home's structural system is not designed to support the extra loads imposed by the addition.
- Do not damage the integrity of the home's structural or weatherproofing system. Seal any weatherproofing connections between the site built structure and the home and flash any roof connections.
- The home's structural system may not be cut or altered in any way. A registered engineer or architect shall approve any alterations or changes.
- Utilize only GFCI outlets for site built structures.
- Install and test smoke alarms in any site built structures according to local code.
- All joints between the home and the addition must be properly sealed so they are watertight.
- The home's mechanical system has been designed for the home itself and does not consider the heating or cooling of the addition.
- The addition must meet all local codes, including site work and fire separation requirements. The manufacturer does not accept any responsibility for the addition's design.
- The home with an addition must be in conformance with the HUD Manufactured Housing Code, such as exiting, light and vent, etc. The addition must be approved by the jurisdiction having authority.
- Site work shall be consistent with the objectives of site grading as described in **Prepare the Site** (p.15).
- The manufacturer will not honor the warranty for any problem that relates to the construction of the addition (leak problems, etc).

A dormer roof can be installed on the home to match the pitch of the addition's roof. The shingles below the dormer must be removed and the dormer must be vented properly. The dormer weight shall be no more than 5 psf and distributed uniformly over the roof trusses of the home. Connections may be made to attach the dormer to the home, but not be used to support the roof loads of the addition. The dormer shall be shingled, flashed and sealed properly to prevent leaks (follow shingle manufacturer's instructions and ARMA guidelines for shingle valley applications).
The manufacturer is providing the above information as an accommodation only and without consideration. Accordingly, by this letter the manufacturer extends no warranties or representation either expressed or implied with regard to the recommendations herein.

▶ go to Prepare Home for Occupancy (p. 115)

Prepare Home for Occupancy

Follow these steps for final inspection and completion of the home.

Follow the Steps below:

- STEP 1.VERIFY ALTERNATIVE CONSTRUCTION (A/C) INSPECTION (p. 115)
- STEP 2. COMPLETE INSPECTION CHECKLIST (p. 115)
- STEP 3. COMPLETE ENERGY STAR CHECKLIST (p. 115)
- STEP 4. CLEAN THE HOME (p. 115)

STEP 1. VERIFY ALTERNATIVE CONSTRUCTION (A/C) INSPECTION

A home designated as an AC home will contain the letters "AC" in the serial number located on the data plate.Verifiying the AC inspection is the responsibility of the retailer. The installation is not complete until the alternative construction inspection has been passed and all applicable documention completed and returned to the plant.

STEP 2. COMPLETE INSPECTION CHECKLIST

After all previous steps have been accomplished, inspect the home to verify that it has been completely and properly installed using the checklist starting on p. 116. Installer must also certify that the installation is in compliance with either the manufacturer's instructions or with an alternate design that has been approved by the manufacturer in compliance with 3285.2(c). Arrange for an inspection by the appropriate LAHJ, if required.

Correct any deficiencies found, if possible, or if not possible, inform the retailer or manufacturer immediately.

STEP 3. COMPLETE ENERGY STAR CHECKLIST

For ENERGY STAR qualified homes (check with the retailer or manufacturer), this step is to be completed by the manufacturer's designated representative.

The manufacturer's representative must complete the Energy Star Site Installation Checklist, obtain signatures on the ENERGY STAR label, and return the completed ENERGY STAR Site Installation Checklist to the manufacturing plant.

STEP 4. CLEAN THE HOME

Remove and properly dispose of all installation-generated dust, debris and packaging materials from the home and the surrounding property. Ensure that the home is in "move-in" condition.

Installation is Complete

Complete Installation Checklist

FOUNDATION SUPPORT

- Footings properly sized and constructed for the soil conditions
- Pier spacing per data plate and applicable table and roof load zone
- Piers properly constructed and vertical
- Perimeter blocking installed (if required)
- Piers at each side of openings 48" or larger
- Piers beneath all outside exterior doors (except when over header beam)
- Center line piers installed at columns
- Shims in place and tight

ANCHORS

- Approved anchors are used
- Proper anchors installed based on soil conditions
- Anchors are installed at correct angles
- Anchor spacing and installation correct
- Longitudinal ties installed (if required)
- Anchor straps are tensioned

UNDER THE HOME

- Moisture retarder installed
- The ground under and around the home has been properly graded to prevent water from collecting or flowing beneath the home
- HVAC ducts are supported off the ground and connected tightly to collars at all ends
- Fireplace combustion air intake free and unrestricted
- No holes or tears in bottom board
- Skirting has been installed per manufacturer's instructions with proper venting and provision for frost heave
- Skirting has been attached in a manner that does not cause water to be trapped between the siding and trim and cannot be forced up into the wall cavity
- Dryer vent, range/cook top exhaust, water heater temperature and pressure overflow pipe and AC condensate drain installed to perimeter of crawl space

EXTERIOR

- Shingled roofs are free of visible damage and serious defects and there are no missing or loose shingles
- Shingle close-up and ridge cap have been completed per applicable details
- All hold down straps on shingled roofs have been removed and holes have been properly sealed
- Penetrations at roof stacks, vents and chimneys have been properly sealed
- Siding and trim is free of gaps, voids, missing fasteners, damage and serious defects. All seams are sealed and hardboard edges are sealed.
- Drip edge and fascia is properly installed and free of damage and serious defects
- Gutters and downspouts are installed properly such that water is diverted away from the home
- Trees and bushes have been trimmed to prevent brushing against the home in windy conditions or under snow loads
- The HUD label is exposed, intact and legible
- The exterior of the home and immediate surroundings is clean, clear of con-

struction materials, dust and debris

INTERIOR

- Ceilings, walls and floor coverings are free from damage and serious defects
- Carpeting is properly stretched and seamed
- All trim and molding is installed properly and free of damage and defects
- All cabinets, countertops, plumbing fixtures, appliances, furnishings and window coverings are free of damage or serious defects
- All cabinet doors and drawers work properly
- All interior and exterior doors and windows open, close and latch properly
- One window in each bedroom meets emergency egress requirements, has operating instruction labels on it and operates properly
- All temporary shipping hardware has been removed
- Floors are level
- The data plate is intact and legible
- Smoke alarms have been tested
- The interior of the home is clean, clear of materials, dust and debris

WATER AND DRAIN SYSTEMS

- Crossover and service connection and splices have been properly made with correct materials
- Water and drain lines are insulated or otherwise protected from freezing
- Pipe supports are installed and properly spaced
- Proper slope has been maintained on all drain lines
- All necessary inspections and tests have been performed
- All sinks, basins, tubs and toilets operate properly
- All hot and cold water lines are properly connected to fixtures, dispense water as labeled and operate properly
- Tub, tub/shower and shower outlets have been verified to ensure the outlet water temperature does not exceed 120°F (49°C)

ELECTRICAL SYSTEMS

- The panel amperage matches the connection to the home
- The home has been properly grounded
- The main power supply has been properly connected and tested by a licensed electrician
- Continuity test has been conducted
- Polarity test has been conducted
- Operational test has been conducted
- All electrical crossovers have been connected
- All receptacles, switches and light fixtures operate properly
- Ground fault circuit interrupters operate properly
- All exterior lights have been properly installed

GAS/FUEL OIL SYSTEMS

- The gas system pressure test has been conducted
- Connections between units are properly made with access as required
- The main fuel line has been properly connected and tested by a qualified technician

APPLIANCE OPERATING AND VENTING

- All appliances are working properly

Complete Installation Checklist

- Appliance venting is in accordance with the manufacturer's instructions
- Fresh air intakes are properly installed
- Whole house, kitchen and bath exhaust fan operation are correct
- Fireplace chimney stack extension and roof cap have been installed in accordance with the manufacturer's instructions
- Air conditioner/heat pump is sized properly
- Air conditioner condensate line is properly trapped and terminates outside of the skirting

MISCELLANEOUS

- Installation/anchoring certificates or seals have been issued and installed (if required)
- Owner's and operation manuals are available for all appliances
- This installation manual is left with home
- Marriage line gasket has been installed and inspected

Index of Steps

INTRODUCTION
GETTING STARTED ..... PG. 10
PREPARE THE SITE ..... PG. 15
INSTALL FOOTINGS ..... PG. 20
CONSTRUCT FOUNDATIONS ..... PG. 35
SET THE HOME ..... PG. 38
COMPLETE MULTI-SECTION SET ..... PG. 44
COMPLETE ROOF AND EXTERIOR WALLS ..... PG. 56
CONNECT CROSSOVERS ..... PG. 61
COMPLETE THE INTERIOR ..... PG. 72
INSTALL STABILIZING SYSTEM ..... PG. 74
CONNECT UTILITIES ..... PG. 95
PREPARE APPLIANCES AND EQUIPMENT ..... PG. 103
COMPLETE EXTERIOR WORK ..... PG. 112
PREPARE HOME FOR OCCUPANCY ..... PG. 115
COMPLETE INSTALLATION CHECKLIST ..... PG. 116

APPENDIX A

Alternative Foundation Approval Form

Retail Sales Center Name: _____

Contact: _____ **Phone No:** _____

Home Information:

Location of Home: _____ County _____ City

_____ State _____ Zip Code

Size of Home: Width: _____ FT Length: _____ FT Tag/Pod _____ FT x _____ FT

Exterior Wall Height: _____ FT Roof Pitch: _____ /12

Roof Live Load: _____ PSF Maximum Pier Ht: _____ IN

Wind Zone/Speed: _____

Type of Anchoring System: _____

Basement (if applicable)

Basement Wall Height: _____ FT Backfill Height: _____ FT

Soil Class: _____

Seismic

Seismic Design Category: _____

Engineer/Architect

Name: _____ Phone No: _____

Address: _____

All foundation details and calculations must be accompanied by this form.

Please submit to:

Gavin Mabe
P - 865.380.3000 x 5318
F - 865.380.3781
gavin.mabe@clayton.net

APPENDIX B

National Rural Electric Cooperative Association

Manufactured Housing Research Alliance

Manufactured Home Cooling Equipment Sizing Guidlines

United States Environmental Protection Agency

Tennessee Valley Authority

For ENERGY STAR® qualified manufactured homes and homes built to the HUD standards[1]

Oversizing cooling equipment: a costly mistake

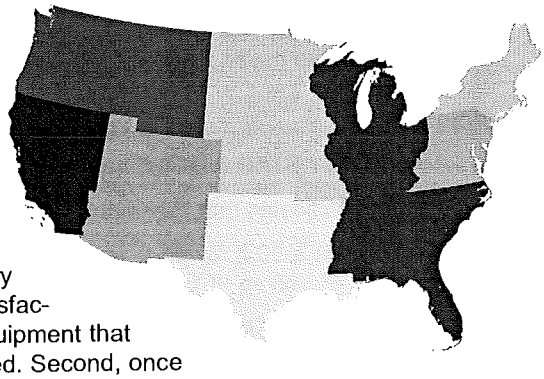

The guidelines offer a simple look-up procedure to assist equipment specifiers, HVAC contractors, home installers, retailers, manufacturers, and electric utility staff select heat pump and air conditioner capacity for new manufactured homes. The guidelines were developed to help eliminate the all-too-common problem of choosing equipment with far more cooling capacity than the home needs.

Oversized HVAC equipment is recognized as a common industry problem that erodes energy efficiency and lowers customer satisfaction. Consumers overpay in two ways. First, they are buying equipment that has more cooling capacity and is more expensive than they need. Second, once installed, oversized equipment cycles on and off frequently, shortening equipment life, lowering efficiency, and increasing power bills. Oversized equipment also can lead to moisture problems within the home.

ENERGY STAR

ENERGY STAR is a nationally recognized, voluntary labeling program designed to identify and promote energy-efficient homes, buildings, and products to consumers and business owners across the United States. The U.S. Environmental Protection Agency is responsible for administering the ENERGY STAR for Homes program. An ENERGY STAR qualified home is at least 30% more energy efficient in its heating, cooling and water heating than a comparable home built to the 1993 Model Energy Code. This increased level of energy efficiency is met by successfully integrating an energy efficient building envelope (effective insulation, tight construction, advanced windows), energy efficient air distribution (air-tight, well-insulated ducts), and energy efficient equipment (space heating and cooling and hot water heating).

ENERGY STAR qualified homes typically require less cooling capacity because their high insulation levels and tight construction slow the transfer of heat from outside into the home, and their tight air distribution systems minimize the loss of conditioned air from the ducts.

[1]Thermal provisions of the Manufactured Housing Construction and Safety Standards, Subpart F, Section §3280

How to use the sizing guidelines

The sizing guidelines consist of a set of nine maps covering the continental U.S. and the **Sizing Table** containing recommended cooling equipment sizes in tons. The maps are divided into counties. Contiguous counties that have the same sizing recommendations are combined into **Sizing Groups.**[1] The maps and **Sizing Table** are available on the Web at http://www.mhrahome.org and http://www.energystar.gov.

Follow these steps to determine your recommended size:

1. Find the county where the home will be sited on the map and determine the corresponding **Sizing Group** number.
2. Find the row corresponding to the **Sizing Group** on the **Sizing Table.** The rows on the table are color-coded to match the colors on the map.
3. Determine the conditioned **Floor Area** of the home and read across the top row of the table locating the pair of columns containing that area.
4. To find the required cooling equipment capacity in tons for a heat pump or air conditioner, read down the column that corresponds to the **Floor Area** and across the row that corresponds to the **Sizing Group.**
5. The left-hand column in each pair represents the appropriate cooling equipment size for ENERGY STAR qualified homes. The right-hand column in each pair represents the size (in tons of cooling capacity) for homes built to the HUD-standards thermal requirements.

Example:

- An ENERGY STAR qualified home is to be installed in **Richmond County** near Ocala, Florida.
- The map indicates that Richmond County is in a **Sizing Group 50.**
- The home is a 28 ft. by 56 ft. multisection containing **1,568 square feet** of conditioned living space (28 ft. x 56 ft.=1,568 sq. ft.).
- Referring to the **Sizing Table,** read across the row labeled **Sizing Group 50** and down the column containing 1,568 square feet (**1,441 to 1,680**).
- Read down the left-hand (blue) column for an **ENERGY STAR** qualified home.
- This home requires a **3 Ton** heat pump.

[1]Some counties are divided into more than one sizing group.

Disclaimer

The values on the chart are intended as a guide for equipment selection. This information is not a substitute for proper evaluation and judgment by an equipment specifier. The cooling capacity estimates are based on typical home configurations and assumed design conditions. Actual sizing requirements may differ from the values on the chart. The Manufactured Housing Research Alliance and its members, the US Environmental Protection Agency, the Tennessee Valley Authority, the National Rural Electric Cooperative Association, sponsors of this work, assume no liability for errors in equipment sizing, selection, and installation.

Sizing charts are available for other regions of the U.S. For information on obtaining sizing guidance for other areas, please visit the Manufactured Housing Research Alliance web site at: http://www.mhrahome.org.

The Manufactured Housing Research Alliance developed the sizing charts. MHRA is a non-profit membership organization comprised of firms actively engaged in the manufactured housing business. Wrightsoft Corporation performed the engineering analysis. The technical basis for the values that appear on the chart is Right-J™, an Air Conditioning Contractors of America (ACCA)-endorsed software version of ACCA Manual J, Load Calculation for Residential Winter and Summer Air Conditioning, Seventh Edition.

Copyright © 2005 Manufactured Housing Research Alliance All rights reserved. No portion of this chart may be reproduced, by any process or technique, without the express written permission of MHRA.

Floor Area (square feet)	Up to 840		841 to 1,120		1,121 to 1,280		1,281 to 1,440		1,441 to 1,680		1,681 to 1,960		1,961 to 2,240		2,241 to 2,520		2,521 to 2,760		2,761 to 3,000	
Sizing Group		HUD		HUD		HUD		HUD		HUD		HUD		HUD		HUD		HUD		HUD
1	1	1	1	1	1.5	1.5	1.5	1.5	1.5	1.5	2	2	2	2	2	2	2	2.5	2.5	2.5
2	1	1	1.5	1	1.5	1.5	1.5	1.5	1.5	1.5	2	2	2	2	2.5	2	2.5	2.5	2.5	2.5
3	1	1	1	1	1.5	1.5	1.5	1.5	1.5	1.5	2	2	2	2	2	2.5	2.5	2.5	2.5	2.5
4	1	1	1.5	1.5	1.5	1.5	1.5	1.5	2	1.5	2	2	2	2	2.5	2	2.5	2.5	2.5	2.5
5	1	1	1.5	1.5	1.5	1.5	1.5	1.5	1.5	1.5	2	2	2	2	2	2.5	2.5	2.5	2.5	2.5
6	1	1	1.5	1.5	1.5	1.5	1.5	1.5	2	1.5	2	2	2	2	2.5	2.5	2.5	2.5	2.5	2.5
7	1	1	1	1.5	1.5	1.5	1.5	1.5	1.5	2	2	2	2	2	2	2.5	2.5	2.5	2.5	3
8	1	1	1.5	1.5	1.5	1.5	1.5	1.5	2	2	2	2	2.5	2	2.5	2.5	2.5	2.5	3	3
9	1	1	1.5	1.5	1.5	1.5	1.5	1.5	2	2	2	2	2.5	2.5	2.5	2.5	2.5	3	2.5	3
10	1	1	1.5	1.5	1.5	1.5	1.5	2	2	2	2	2	2.5	2.5	2.5	2.5	3	3	3	3
11	1	1.5	1.5	1.5	1.5	1.5	1.5	2	2	2	2	2.5	2.5	2.5	2.5	3	3	3	3	3.5
12	1.5	1.5	1.5	1.5	1.5	1.5	2	2	2	2	2.5	2.5	2.5	2.5	2.5	3	3	3	3	3.5
13	1	1.5	1.5	1.5	1.5	2	2	2	2	2	2	2.5	2.5	2.5	2.5	3	3	3	3	3.5
14	1.5	1.5	1.5	1.5	1.5	2	2	2	2	2	2.5	2.5	2.5	2.5	3	3	3	3	3	3.5
15	1.5	1.5	1.5	1.5	1.5	2	2	2	2	2.5	2.5	2.5	2.5	3	3	3	3	3.5	3	3.5
16	1.5	1.5	1.5	2	2	2	2	2	2	2.5	2.5	2.5	2.5	3	3	3	3	3.5	3	4
17	1.5	1.5	1.5	2	1.5	2	2	2	2	2.5	2.5	2.5	2.5	3	3	3.5	3	3.5	3	4
18	1.5	1.5	1.5	2	2	2	2	2	2	2.5	2.5	2.5	3	3	3	3.5	3	3.5	3.5	4
19	1.5	1.5	1.5	2	2	2	2	2	2	2.5	2.5	3	3	3	3	3.5	3	3.5	3.5	4
20	1.5	1.5	1.5	2	2	2	2	2	2.5	2.5	2.5	3	3	3	3	3.5	3	4	3.5	4
21	1.5	1.5	1.5	2	2	2	2	2.5	2	2.5	2.5	3	3	3	3	3.5	3	4	3.5	4
22	1.5	1.5	1.5	2	2	2	2	2.5	2.5	2.5	2.5	3	3	3.5	3	3.5	3.5	4	3.5	4
23	1.5	1.5	2	2	2	2	2	2.5	2.5	2.5	2.5	3	3	3.5	3	3.5	3.5	4	3.5	4.5
24	1.5	1.5	1.5	2	2	2	2	2.5	2.5	2.5	2.5	3	3	3.5	3	4	3.5	4	3.5	4.5
25	1.5	1.5	2	2	2	2.5	2	2.5	2.5	3	2.5	3	3	3.5	3	4	3.5	4	3.5	4.5
26	1.5	1.5	2	2	2	2.5	2	2.5	2.5	3	2.5	3	3	3.5	3	4	3.5	4.5	3.5	4.5
27	1.5	2	2	2	2	2.5	2	2.5	2.5	3	3	3	3	3.5	3.5	4	3.5	4.5	3.5	5
28	1.5	2	2	2	2	2.5	2	2.5	2.5	3	2.5	3.5	3	4	3.5	4	3.5	4.5	3.5	5
29	1.5	2	2	2	2	2.5	2	2.5	2.5	3	3	3.5	3	4	3.5	4	3.5	4.5	3.5	5
30	1.5	2	2	2	2	2.5	2.5	2.5	2.5	3	3	3.5	3.5	4	3.5	4	3.5	4.5	4	5
31	1.5	2	2	2.5	2	2.5	2.5	2.5	2.5	3	3	3.5	3	4	3.5	4	3.5	4.5	4	5
32	1.5	2	2	2.5	2	2.5	2	2.5	2.5	3	3	3.5	3	4	3.5	4.5	3.5	4.5	3.5	5
33	1.5	2	2	2.5	2	2.5	2	2.5	2.5	3	3	3.5	3	4	3.5	4.5	3.5	4.5	4	5
34	1.5	2	2	2.5	2.5	2.5	2.5	2.5	2.5	3	3	3.5	3.5	4	3.5	4.5	3.5	4.5	4	5
35	1.5	2	2	2.5	2	2.5	2.5	3	2.5	3	3	3.5	3.5	4	3.5	4.5	3.5	5	4	5
36	1.5	2	2	2.5	2	2.5	2	3	2.5	3	2.5	3.5	3	4	3	4.5	3.5	5	3.5	5.5
37	1.5	2	2	2.5	2.5	2.5	2.5	3	3	3	3	3.5	3.5	4	3.5	4.5	4	5	4	5.5
38	1.5	2	2	2.5	2	2.5	2	3	2.5	3.5	3	3.5	3	4	3.5	4.5	3.5	5	3.5	5.5
39	1.5	2	2	2.5	2	2.5	2.5	3	2.5	3.5	3	3.5	3.5	4	3.5	4.5	3.5	5	4	5.5
40	1.5	2	2	2.5	2	2.5	2.5	3	2.5	3.5	3	3.5	3.5	4	3.5	4.5	4	5	4	5.5
41	2	2	2	2.5	2.5	2.5	2.5	3	3	3.5	3	3.5	3.5	4	4	4.5	4	5	4	5.5
42	2	2	2.5	2.5	2.5	2.5	2.5	3	3	3.5	3.5	3.5	4	4	4	4.5	4	5	4.5	5.5
43	1.5	2	2	2.5	2	2.5	2	3	2.5	3.5	3	4	3	4.5	3.5	4.5	3.5	5	3.5	5.5
44	1.5	2	2	2.5	2.5	2.5	2.5	3	3	3.5	3	4	3.5	4.5	4	4.5	4	5	4	5.5
45	1.5	2	2	2.5	2.5	3	2.5	3	2.5	3.5	3	4	3.5	4.5	3.5	4.5	4	5	4	5.5
46	2	2	2	2.5	2.5	3	2.5	3	3	3.5	3.5	4	4	4.5	4	4.5	4	5	4	5.5
47	2	2	2.5	2.5	2.5	3	2.5	3	3	3.5	3.5	4	4	4.5	4	4.5	4.5	5	4.5	5.5
48	1.5	2	2	2.5	2	3	2.5	3	2.5	3.5	3	4	3	4.5	3.5	5	3.5	5.5	3.5	5.5
49	1.5	2	2	2.5	2.5	3	2.5	3	3	3.5	3	4	3.5	4.5	3.5	5	4	5.5	4	5.5
50	2	2	2	2.5	2.5	3	2.5	3	3	3.5	3.5	4	3.5	4.5	4	5	4	5.5	4	5.5
51	2	2	2.5	2.5	2.5	3	2.5	3	3	3.5	3.5	4	4	4.5	4	5	4.5	5.5	4.5	5.5
52	1.5	2	2	2.5	2	3	2.5	3	2.5	3.5	3	4	3.5	4.5	3.5	5	3.5	5.5	4	6
53	1.5	2	2	2.5	2.5	3	2.5	3	2.5	3.5	3	4	3.5	4.5	3.5	5	4	5.5	4	6
54	1.5	2	2	2.5	2.5	3	2.5	3	3	3.5	3	4	3.5	4.5	4	5	4	5.5	4	6
55	2	2	2.5	2.5	2.5	3	2.5	3	3	3.5	3.5	4	4	4.5	4	5	4	5.5	4.5	6
56	2	2	2.5	2.5	2.5	3	3	3	3	3.5	3.5	4	4	4.5	4	5	4.5	5.5	4.5	6
57	2	2	2.5	2.5	2.5	3	3	3	3.5	3.5	3.5	4	4	4.5	4.5	5	4.5	5.5	5	6
58	1.5	2	2	2.5	2	3	2.5	3.5	2.5	3.5	3	4	3.5	4.5	3.5	5	3.5	5.5	4	6
59	2	2	2	3	2.5	3	2.5	3.5	3	3.5	3	4	3.5	4.5	4	5	4	5.5	4	6
60	2	2	2.5	3	2.5	3	3	3.5	3.5	3.5	3.5	4	4	4.5	4.5	5	4.5	5.5	5	6
61	2	2	2.5	3	2.5	3	2.5	3.5	3	4	3.5	4.5	4	5	4	5.5	4.5	6	4.5	6.5
62	1.5	2.5	2	3	2.5	3	2.5	3.5	3	4	3	4.5	3.5	5	4	5.5	4	6	4.5	6.5
63	2	2.5	2.5	3	2.5	3	2.5	3.5	3	4	3.5	4.5	4	5	4	5.5	4.5	6	4.5	6.5
64	2	2.5	2.5	3	3	3	3	3.5	3.5	4	4	4.5	4.5	5	4.5	5.5	5	6	5	6.5
65	2	2.5	2.5	3	2.5	3.5	3	3.5	3.5	4	3.5	4.5	4	5	4.5	5.5	4.5	6	5	7
66	2	2.5	2.5	3	3	3.5	3	3.5	3.5	4	4	4.5	4.5	5.5	4.5	6	4.5	6.5	5	7
67	2	2.5	3	3	3	3.5	3	3.5	3.5	4	4	4.5	4.5	5.5	5	6	5	6.5	5.5	7
68	2.5	2.5	3	3	3	3.5	3.5	3.5	4	4.5	4.5	5	5	5.5	5	6	5.5	6.5	5.5	7
69	2	2.5	2.5	3	3	3.5	3	4	3.5	4.5	4	5	4.5	5.5	4.5	6	5	6.5	5	7
70	2.5	3	3	3.5	3.5	4	3.5	4	4	4.5	4.5	5.5	5	6	5.5	6.5	5.5	7	6	8
71	2.5	3	3	3.5	3.5	4	3.5	4.5	4	5	4.5	5.5	5.5	6	5.5	7	5.5	7.5	6	8

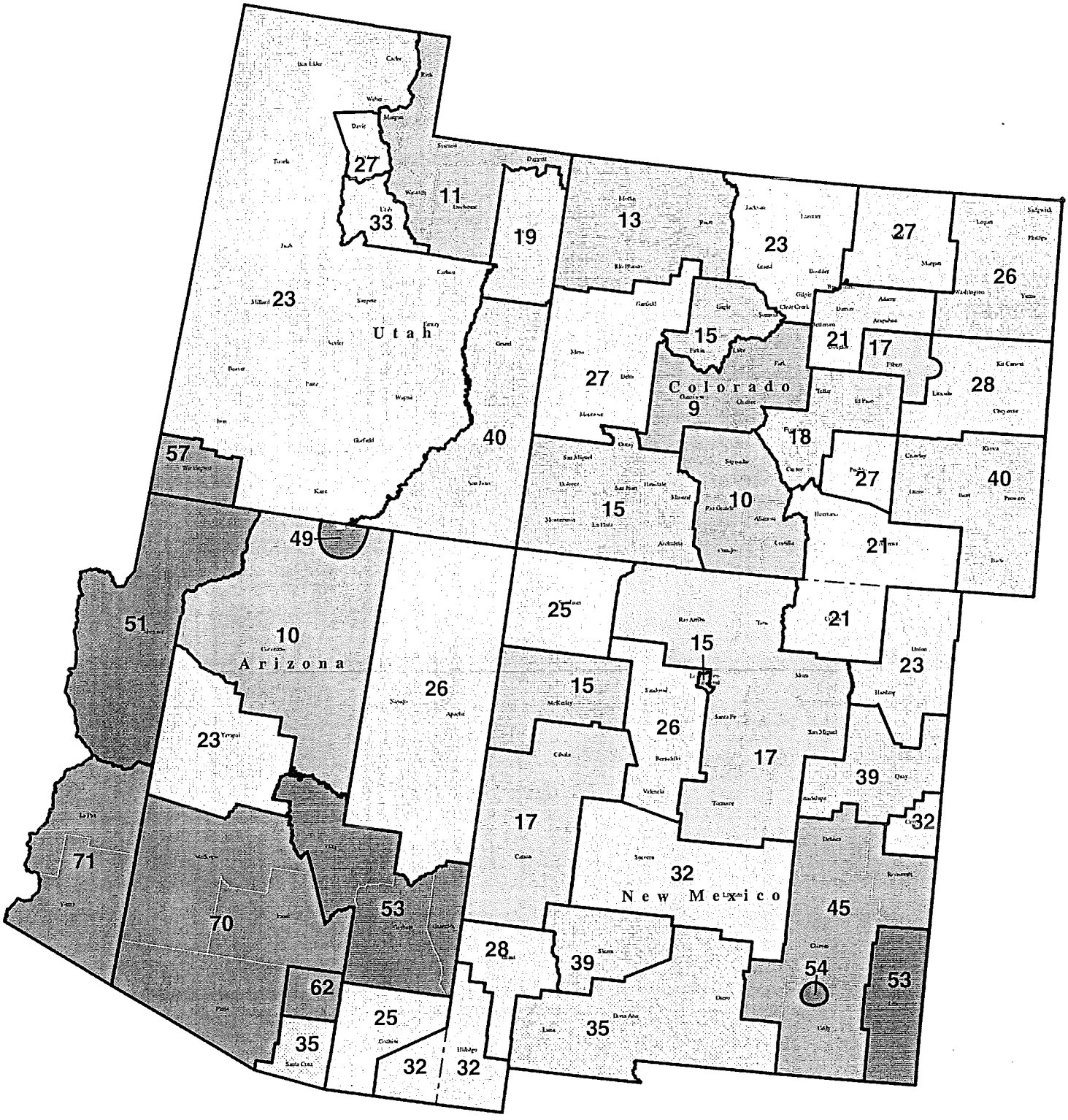
Utah
Colorado
Arizona
New Mexico
27
33
11
19
13
23
27
26
23
15
21
17
27
28
9
18
40
57
27
40
15
10
49
21
51
10
25
21
15
23
26
15
26
23
17
39
17
32
71
32
70
53
45
28
39
54
53
62
25
35
35
32
32

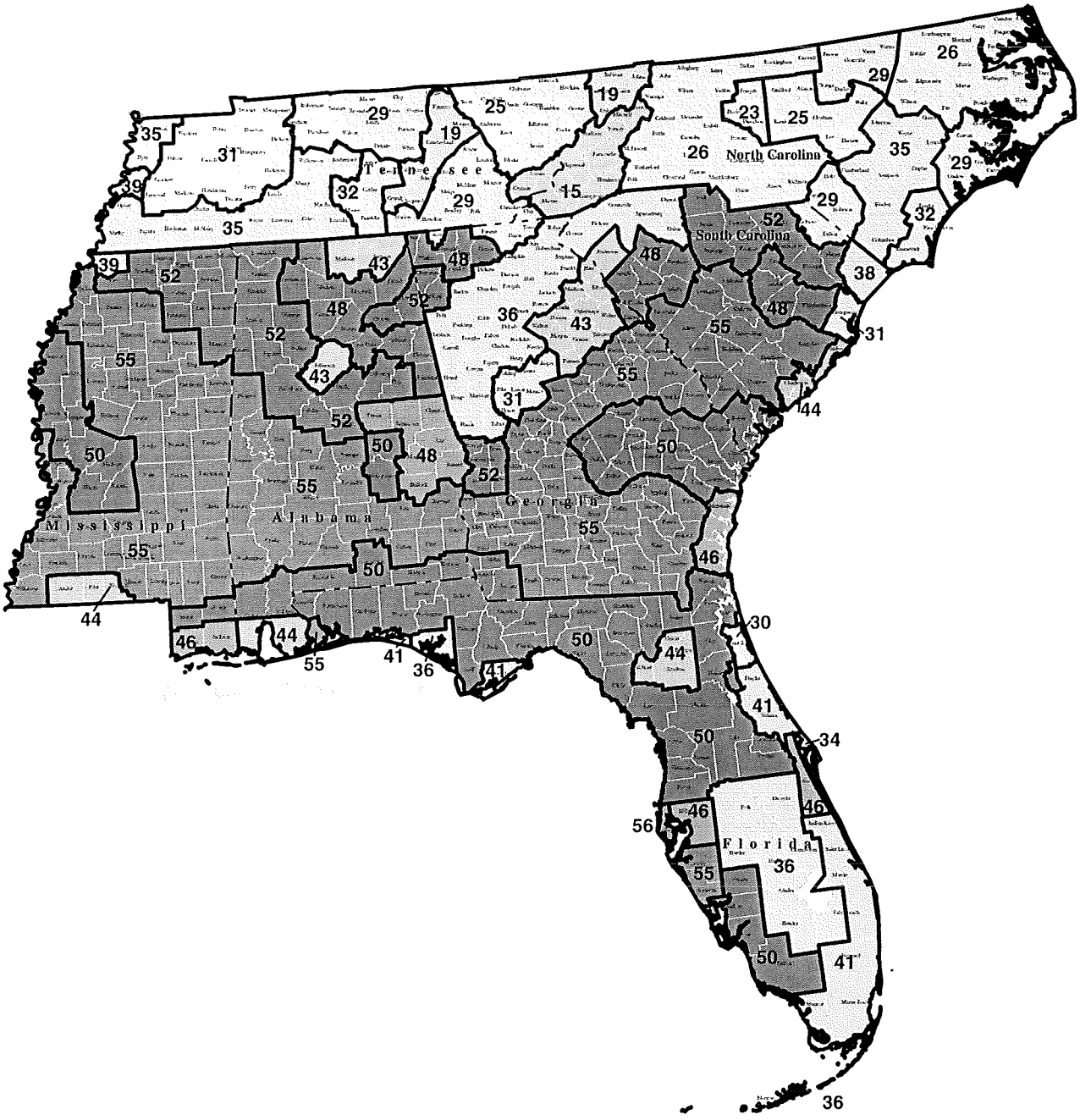
Tennessee
North Carolina
South Carolina
Mississippi
Alabama
Georgia
Florida

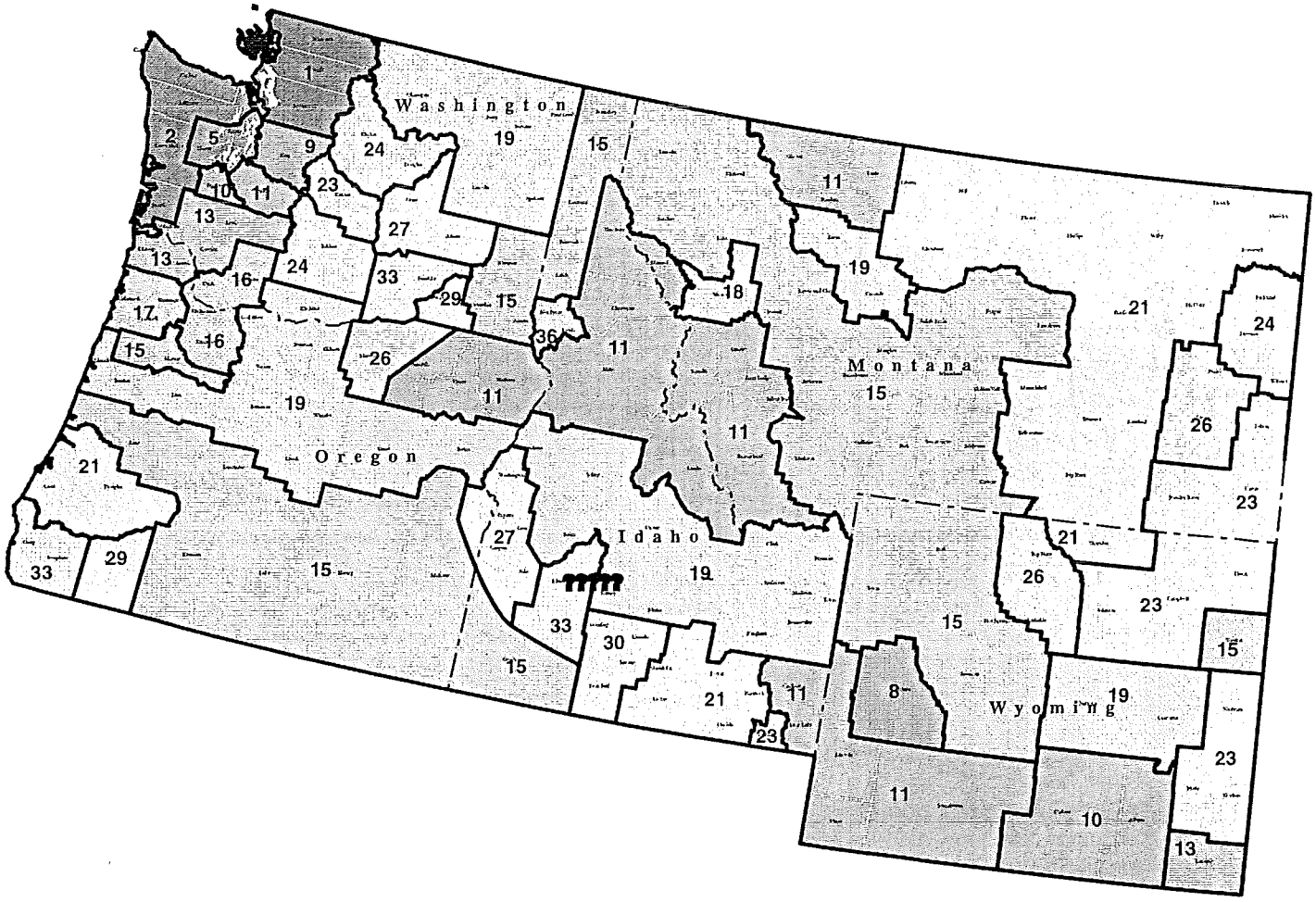
Washington
Oregon
Idaho
Montana
Wyoming
1
2
5
9
10
11
13
13
16
16
17
15
19
21
24
23
27
24
33
29
15
26
11
36
11
19
15
18
11
19
21
24
26
23
21
26
23
15
19
23
10
13
11
8
15
21
11
23
30
33
15
27
33
29
15

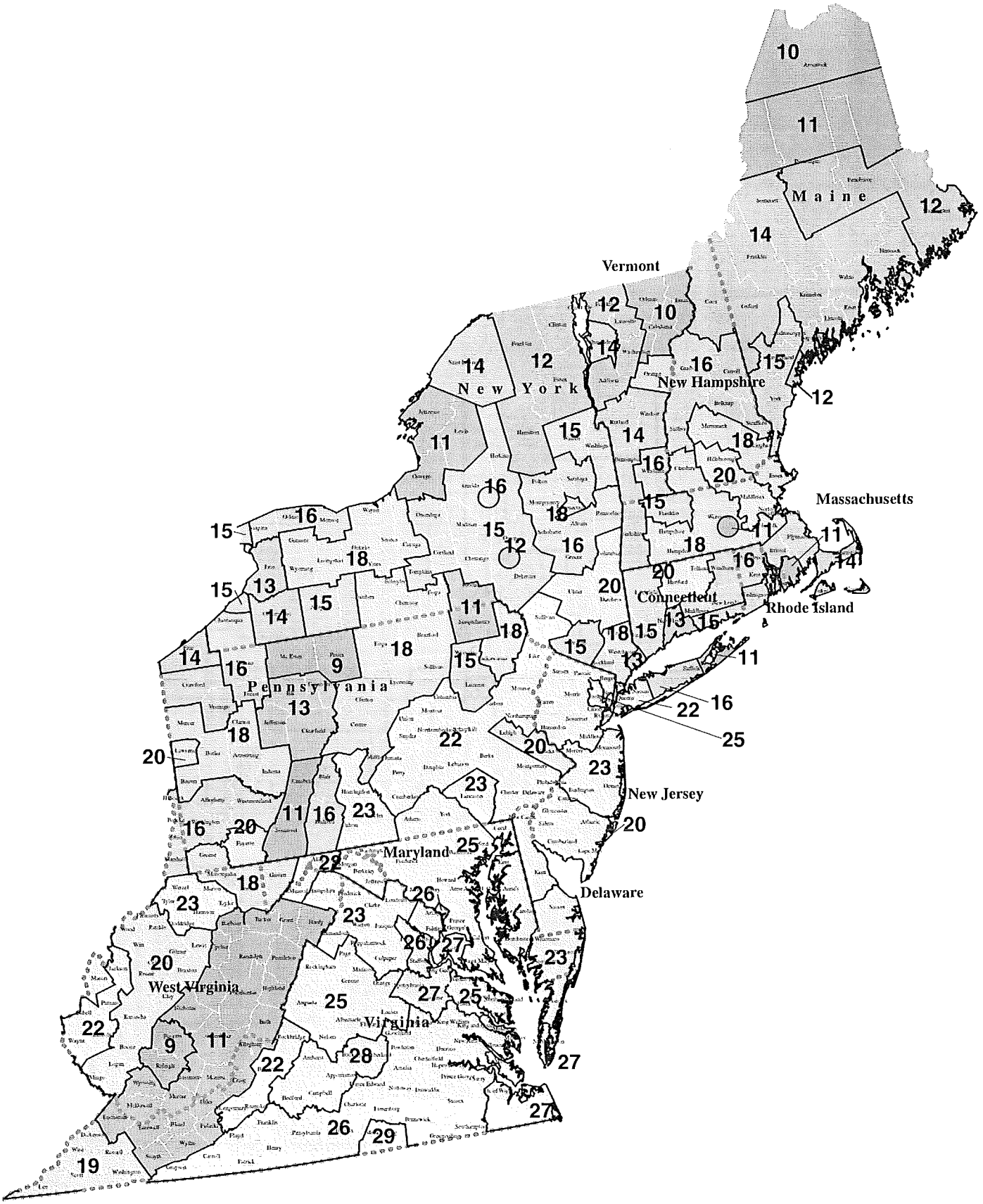
Maine
Vermont
New York
New Hampshire
Massachusetts
Connecticut
Rhode Island
Pennsylvania
New Jersey
Maryland
Delaware
West Virginia
Virginia

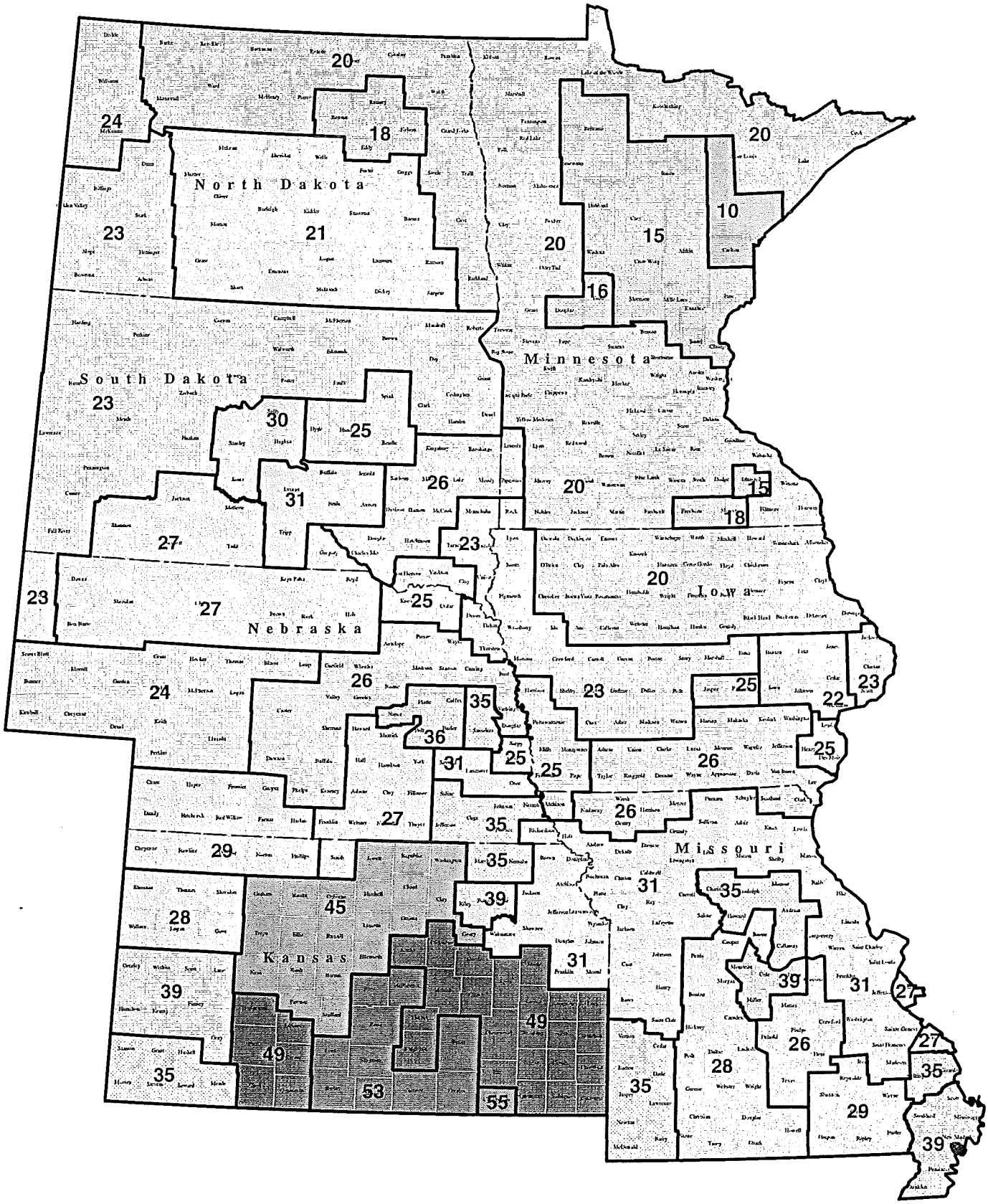
North Dakota
South Dakota
Minnesota
Nebraska
Iowa
Kansas
Missouri
20
24
18
23
21
20
15
10
16
23
30
25
26
20
15
18
31
27
23
20
23
27
25
24
26
35
23
25
22
23
36
31
25
25
26
25
27
35
26
29
35
31
35
28
45
39
31
39
31
27
39
49
26
27
49
35
53
55
35
28
35
29
39

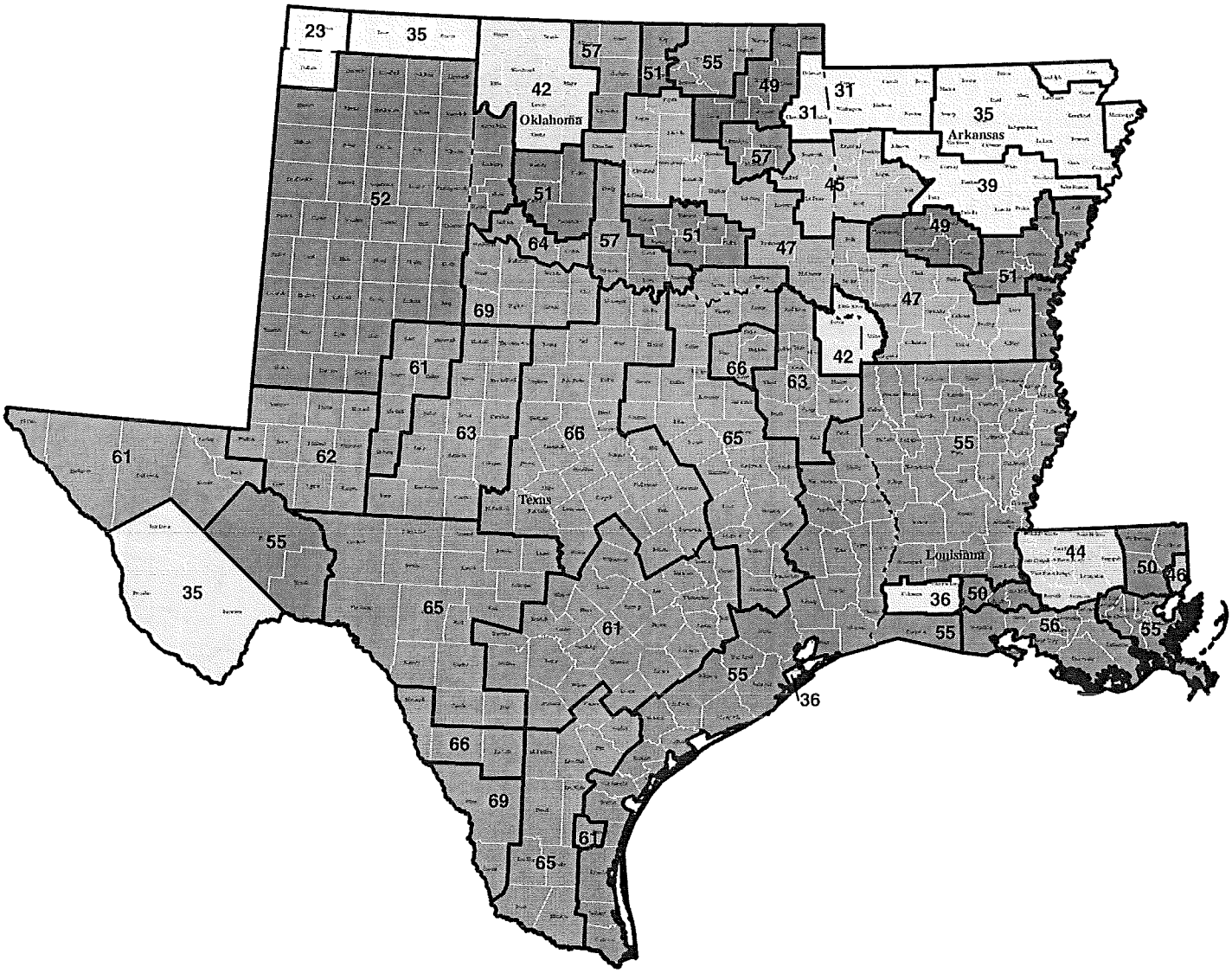
23
35
57
51
55
49
31
31
35
Arkansas
42
Oklahoma
57
45
39
52
51
49
64
57
51
47
51
69
47
42
61
66
63
63
66
65
55
61
62
Texas
55
Louisiana
44
50
46
35
65
36
50
61
55
56
55
55
36
66
69
61
65

Wisconsin
Michigan
Illinois
Indiana
Ohio
Kentucky
Cambridge
11
12
10
15
14
18
22
16
20
23
25
26
31
35
27
28
19

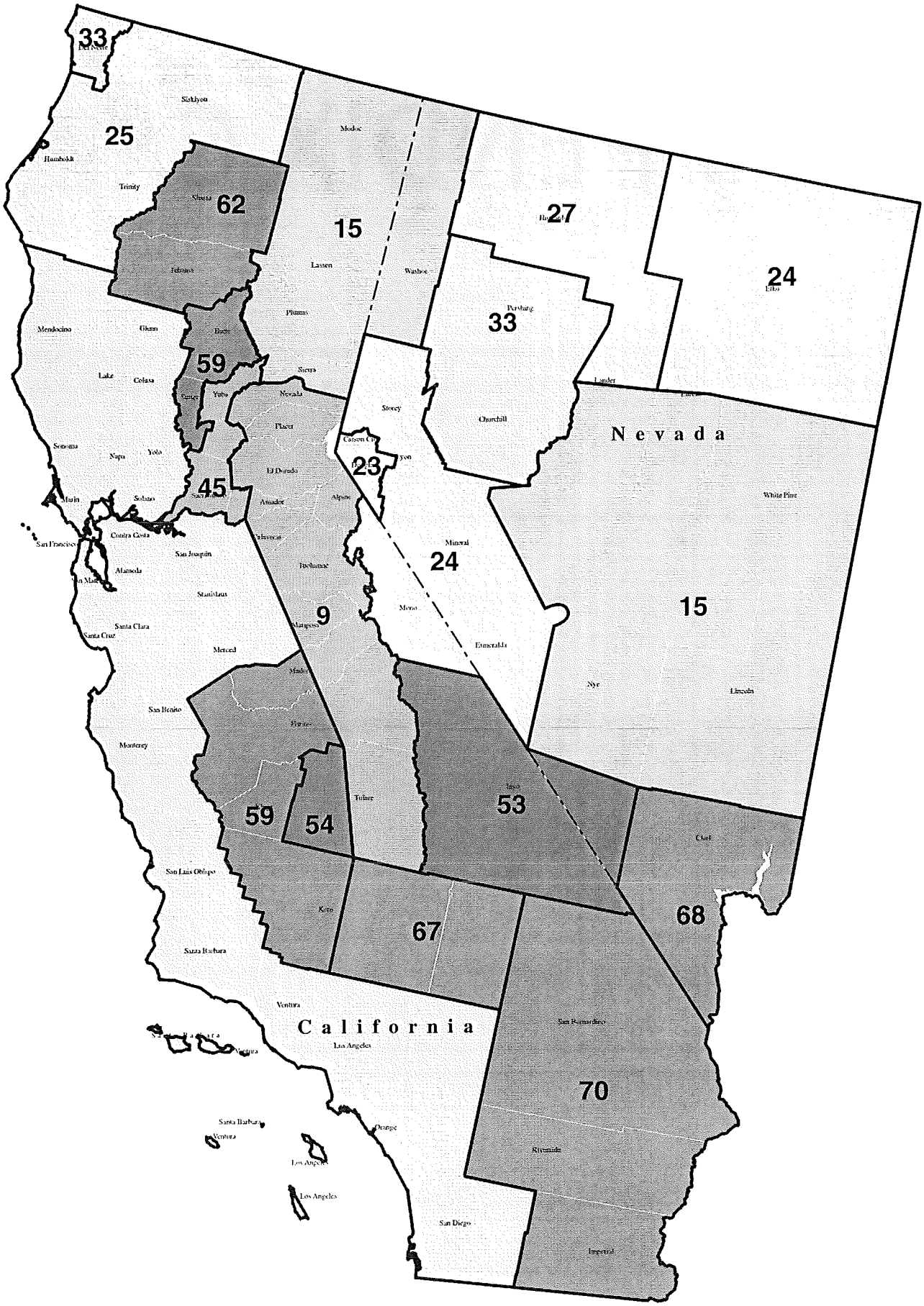
33
25
62
15
27
24
33
59
45
23
24
15
9
59
54
53
67
68
70
Nevada
California
Siskiyou
Humboldt
Trinity
Shasta
Modoc
Lassen
Washoe
Plumas
Sierra
Pershing
Churchill
Lander
Elko
Mendocino
Glenn
Butte
Lake
Colusa
Yuba
Nevada
Placer
Storey
Sonoma
Napa
Yolo
El Dorado
Amador
Alpine
Marin
Solano
Contra Costa
San Francisco
San Joaquin
Alameda
Stanislaus
Santa Clara
Santa Cruz
Merced
Tuolumne
Mineral
Mono
Esmeralda
White Pine
Nye
Lincoln
San Benito
Monterey
Tulare
Inyo
Clark
San Luis Obispo
Kern
Santa Barbara
Ventura
Los Angeles
San Bernardino
Orange
Riverside
San Diego
Imperial

APPENDIX C

Hurricane Shutter Designs

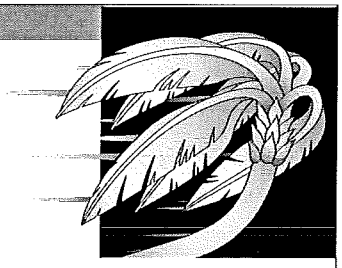

One of the best ways to protect a home from damage in windstorms is to install shutters over all large windows and glass doors. Shutters protect doors and windows from windborne objects. They also prevent damage caused by sudden pressure changes when a window or door is broken.

HIGH WIND ZONES OF THE UNITED STATES

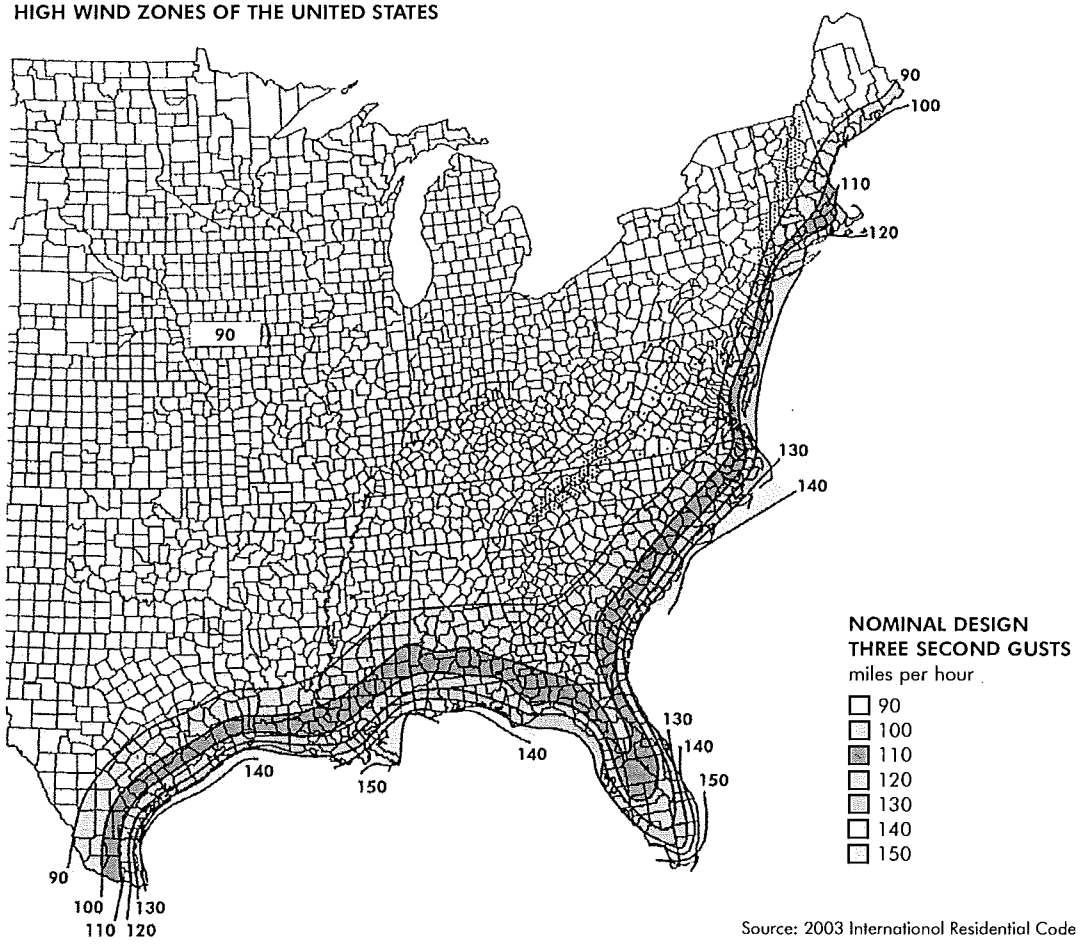

Source: 2003 Internationol Residential Code

APA
THE ENGINEERED
WOOD ASSOCIATION

The following designs are presented as two basic alternatives: The first is to present the minimum shutters that are permitted by the codes when such shutters are required. The requirements of the 2003 International Residential Code (IRC) and the 2001 Florida Building Code (FBC) are presented. They permit the use of minimum 7/16" Rated Sheathing as shutters to protect against the impact of windborne debris. Check with local building departments for verification or clarification of requirements.

The second approach provides some design details for stronger and stiffer shutters than provided for by the code-minimum designs. It should be noted that these designs were developed prior to the adoption of specific standards for shutter designs by any U.S. codes. The supports detailed for these shutters meet code requirements when mounted according to the specifications in Table R301.2.1.2. The mounting brackets for the masonry block structures have been tested for design wind loads but have not been impact or cyclic tested because they were developed as design guides before these standards were developed.

1. Code-Minimum Shutter Design:

The 2003 **International Residential Code** (IRC), Section R301.2.1.2, provides that "windows in buildings located in windborne debris regions shall have glazed openings protected from windborne debris or the building shall be designed as a partially enclosed building in accordance with the *International Building Code*. Glazed opening protection for windborne debris shall meet the requirements of the Large Missile Test of ASTM E 1996 and of ASTM E 1886 referenced therein.

Exception: Wood structural panels with a minimum thickness of 7/16 inch (11.1 mm) and a maximum span of 8 feet (2438 mm) shall be permitted for opening protection in one- and two-story buildings. Panels shall be precut to cover the glazed openings with attachment hardware provided. Attachments shall be provide in accordance with Table R301.2.1.2 or shall be designed to resist the components and cladding loads determined in accordance with the provisions of the *International Building Code*."

TABLE R301.2.1.2

WINDBORNE DEBRIS PROCTECTION FASTENING SCHEDULE FOR WOOD STRUCTURAL PANELS[a,b,c]

	Fastener Spacing		
Fastener Type	**Panel Span ≤ 4 ft**	**4 ft < Panel Span ≤ 6 ft**	**6 ft < Panel Span ≤ 8 ft**
2-1/2" #6 Wood Screws	16"	12"	9"
2-1/2" #8 Wood Screws	16"	16"	12"

a. This table is based on 130 mph wind speeds and a 33-foot mean roof height.

b. Fasteners shall be installed at opposing ends of the wood structural panel.

c. Where screws are attached to masonry or masonry/stucco, they shall be attached utilizing vibration-resistant anchors having a minimum ultimate withdrawal capacity of 490 pounds.

Section R202 defines a Windborne Debris Region as any "areas within hurricane-prone regions within one mile of the coastal mean high water line where the basic wind speed is 110 mph or greater; or where the basic wind speed is equal to or greater than 120 mph; or Hawaii." (See map)

Alternatively, Section 1606.1.4 of the **2001 Florida Building Code:**

"In windborne debris regions, exterior glazing that receives positive pressure in the lower 60 feet in buildings shall be assumed to be openings unless such glazing is impact resistant or protected with an impact resistant covering meeting the requirements of SSTD 12, ASTM E 1886 and ASTM E 1996, or Miami-Dade PA 201, 202 and 203 referenced therein as follows:

1. Glazed openings located within 30 feet of grade shall meet the provisions of the Small Missile Test.

2. Glazed openings located more than 30 feet above grade shall meet the provision of the Small Missile Test.

Exception: Wood structural panels with a minimum thickness of 7/16 inch and maximum panel span of 8 feet shall be permitted for opening protection in one- and two-story buildings. Panels shall be precut to cover the glazed openings with attachment hardware provided. Attachment shall be designed to resist the components and cladding loads determined in accordance with Table 1606.2B. Attachment in accordance with Table 1606.1.4 is permitted for buildings with mean roof height of 33 feet or less where wind speeds do not exceed 130 mph."

TABLE 1606.1.4

WINDBORNE DEBRIS PROTECTION FASTENING SCHEDULE FOR WOOD STRUCTURAL PANELS

	Fastener Spacing (in.)[a,b]			
Fastener Type	**Panel Span ≤ 2 ft**	**2 ft < Panel Span < 4 ft**	**4 ft < Panel Span < 6 ft**	**6 ft < Panel Span < 8 ft**
2-1/2 #6 Wood Screw[c]	16	16	12	9
2-1/2 #8 Wood Screw[c]	16	16	16	12
Double-Headed Nails[d]	12	6	4	3

a. This table is based on a maximum wind speed of 130 mph and mean roof height of 33 feet or less.

b. Fasteners shall be installed at opposing ends of the wood structural panel.

c. Where screws are attached to masonry or masonry/stucco, they shall be attached using vibration-resistant anchors having a minimum withdrawal capacity of 490 lb.

d. Nails shall be 10d common or 12d box double-headed nails.

Section 1606.1.5 defines a Windborne Debris Region as:

1. Area within one mile of the coastal mean high water line where the basic wind speed is 110 mph or greater. (See map)

2. Areas where the basic wind speed is 120 mph or greater except from the eastern border of Franklin Count to the Florida-Alabama line where the region includes area only within 1 mile of the coast. (See map)

2. Stronger, Stiffer Designs

The following design pages describe how to construct stronger, stiffer shutters for attachment to wood and masonry walls. The masonry attachments were designed prior to the adoption of specific test standards for shutter designs by U.S. codes. The shutters have been tested to resist the design wind loads and impacts but the attachments to masonry have not been impact or cyclic-load tested. The masonry attachment details are therefore supplied as guides in developing individual designs.

Most building codes include provisions for storm shutters. Earlier code had provisions for a deflection of less than the shutter span (in inches) divided by 30 (for instance, a 40-inch span should not bend more than 40/30 = 1.33 inches when the wind blows). They also should bend less than 2 inches maximum and should remain at least one inch away from the window when under full wind force.

The easiest designs are those that simply cover the opening with a wood structural panel. In wood-frame construction, panels can be nailed over the openings when a hurricane approaches. Buildings made with concrete blocks, however, require advance preparation.

In some cases, stiffeners may be necessary to limit deflection of the shutter against the glass. Stiffeners function best if the 2 x 4s are on the outside of the shutter and oriented with the narrow edge against the shutter.

Tables 1 and 2 and Figure 1 on the following page apply to most of the designs, and are referenced accordingly.

These APA hurricane shutter designs are based on pressures associated with a 3-second gust wind speed of 120 mph. Building codes are currently being reviewed for possible changes. Before constructing shutters, therefore, it is important to check with your local building department for an update on current code requirements.

Note: The shutter designs shown herein will provide significant protection from hurricane-force winds. This publication contains recommendations to serve as a guide only. It does not include all possible shutter, anchor and fastening systems, and the installer must adjust all dimensions to compensate for particular installations and hardware used. These shutter designs by no means represent all possible workable designs and can always be upgraded to provide even greater margins of safety and protection. All shutter designs herein are intended to be temporary, and mounted and removed from outside the building. All designs are based on wind pressure capacities only.

While the design wind pressures used are based on ASCE 7-95, the building owner/installer must still carefully evaluate each system and then, if necessary, make any modifications consistent with good design and building practices.

DESIGN 1	**SHUTTERS FOR WOOD-FRAME BUILDINGS**
DESIGN 2	**SHUTTERS FOR MASONRY BLOCK STRUCTURES** BARREL BOLT LATCH SUPPORTS
DESIGN 3	**SHUTTERS FOR MASONRY BLOCK STRUCTURES** STEEL OR ALUMINUM ANGLE AND SCREW SUPPORTS
DESIGN 4	**SHUTTERS FOR MASONRY BLOCK STRUCTURES** SHUTTERS ATTACHED TO OUTSIDE WALL WITH PERMANENTLY MOUNTED BRACKETS
DESIGN 5	**SHUTTERS FOR MASONRY BLOCK STRUCTURES** FOR OPENINGS WIDER THAN 8 FEET

TABLE 1

MAXIMUM SPAN WITHOUT STIFFENERS

APA Panel Span Rating	Approximate Weight (lb./ft.^{2})	Maximum Shutter Span	Approximate Deflection (in.) at 120 mph Design Wind Speed at 15-ft. Height
32/16	1.5	30	0.5
40/20	2	36	0.5
48/24	2.4	48	0.9
48 oc	3.6	72	1.5

TABLE 2

ESTIMATED DEFLECTION AT 120 MPH DESIGN WIND SPEED AT 15-FT. HEIGHT FOR SHUTTERS WITH 2 X 4s AT 16 INCHES o.c.

APA Panel Span Rating	Approximate Weight (lb./ft.^{2})	Shutter Span (in.)						
		24	36	48	60	72	84	96
32/16	2.5	0.2	0.2	0.3	0.4	0.5	0.8	–
40/20	2.9	0.1	0.1	0.2	0.2	0.4	0.7	1.1
48/24	3.4	–	–	0.1	0.2	0.3	0.6	1.0
48 oc	4.6	–	–	0.1	0.1	0.3	0.5	0.9

FIGURE 1

SHUTTER STIFFENER ATTACHMENT – IF REQUIRED

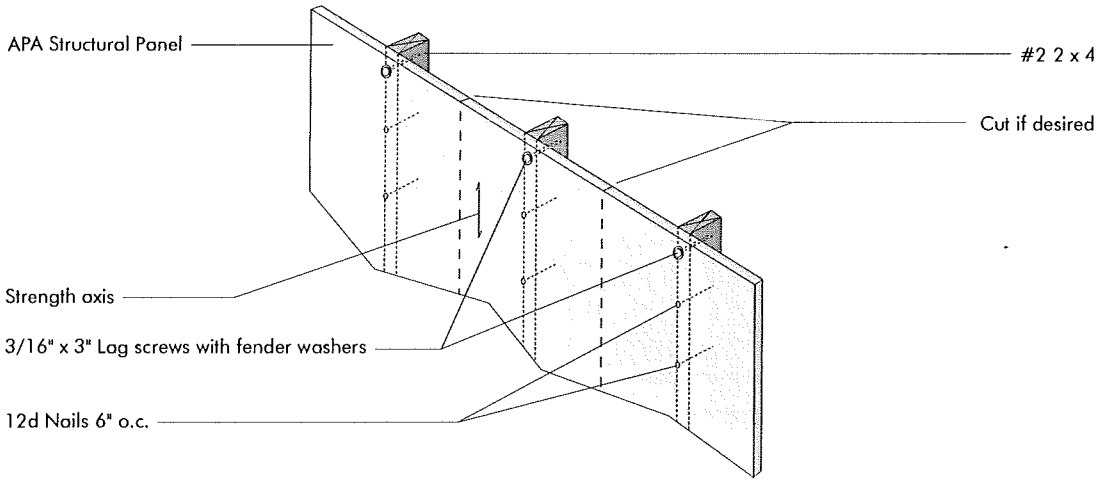

DESIGN 1

SHUTTERS FOR WOOD-FRAME BUILDINGS

This design from *APA – The Engineered Wood Association* describes how to construct structural panel shutters for attachment to wood-frame buildings.

Steps to Constructing Shutters

1. Review Tables 1 and 2 in the Design Considerations section to determine if stiffeners are needed. Attach stiffener as shown in Figures 1 and 1A.
2. Cut APA wood structural panels with adequate edge overlap to receive nails. Orient long panel axis (strength axis) of the panel as shown in Figures 1 and 1A.
3. Use a long brad or finishing nail to locate the framing behind the wood siding. The nails used to attach the shims and the shutters must hit the framing to be fully effective.
4. Nail shims to the framing with 12d nails. Use 16d nails for shims over 3/4 inch thick. For spans up to 5 feet, space the nails 6 inches o.c. at each shim. For spans over 5 feet, space nails 4 inches o.c. at each shim. (Figures 1B and 1C)
5. Attach the shutters with double-headed nails for ease of later removal. (Figures 1B and 1C) Use 12d nails for shutters up to 3/4 inch thick and 16d nails for shutters over 3/4 inch thick. For spans up to 5 feet, space the nails 6 inches o.c. at each end of the shutter panel. For spans over 5 feet, space nails 4 inches o.c. at each end of the shutter panel. Nailing the panel on all four sides, instead of just the two ends, will further limit deflection and maximize strength.
6. Any permanently installed hardware, shims or fastening devices must be installed using standard/acceptable methods of waterproofing. All abandoned holes must be sealed.
7. After fabrication each shutter should be marked for orientation and location to simplify installation.
8. If shims are to be left in place, use galvanized nails and finish like siding or exterior trim.

FIGURE 1A

SHUTTER ATTACHMENT – VIEW FROM OUTSIDE

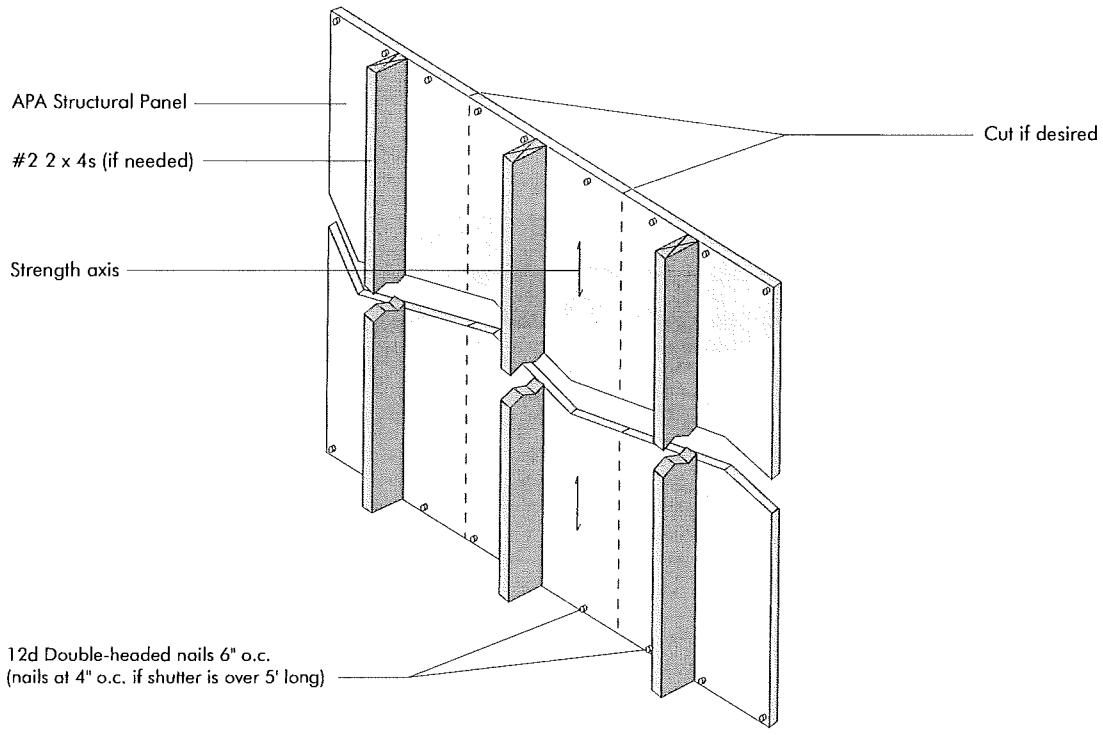

FIGURE 1B

SHUTTER ATTACHMENT – TOP

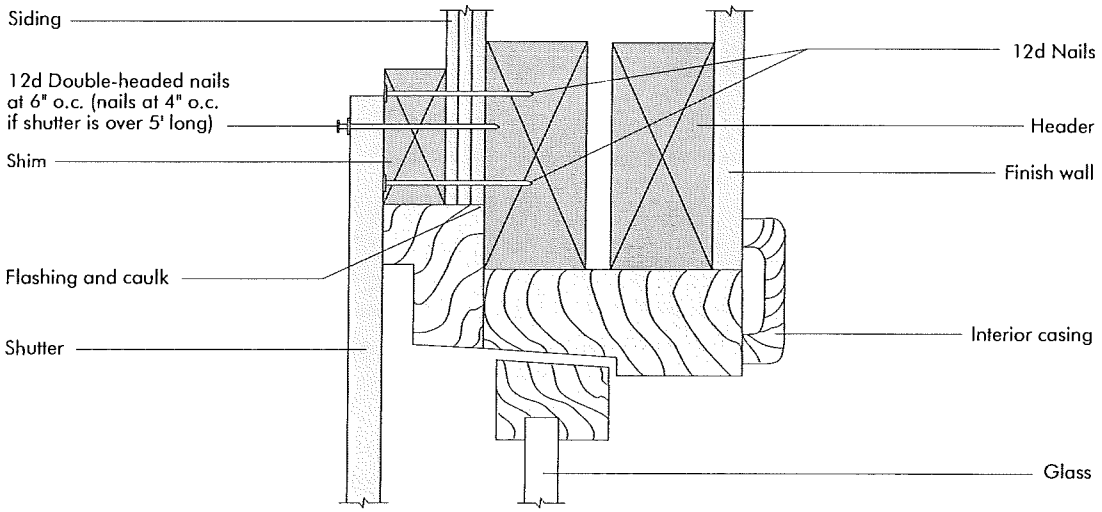

FIGURE 1C

SHUTTER ATTACHMENT – BOTTOM

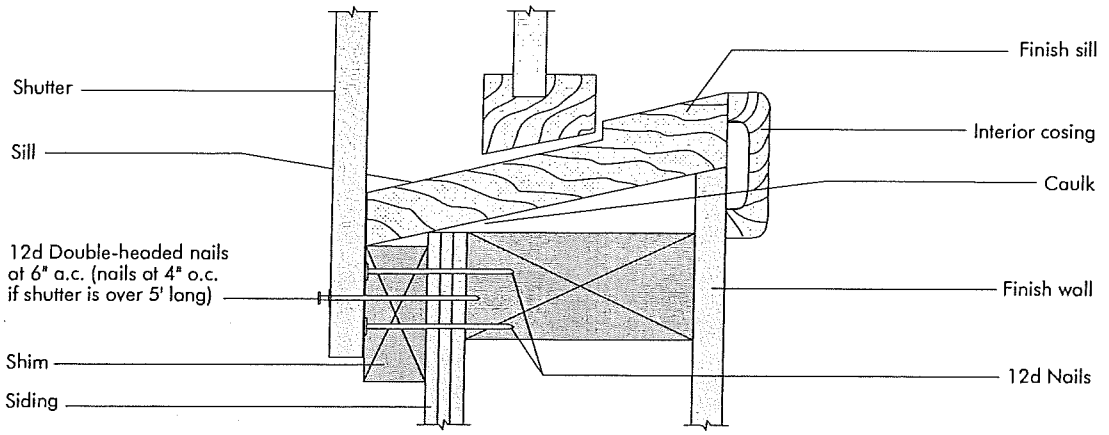

Alternate Wind Protection for Windows and Doors

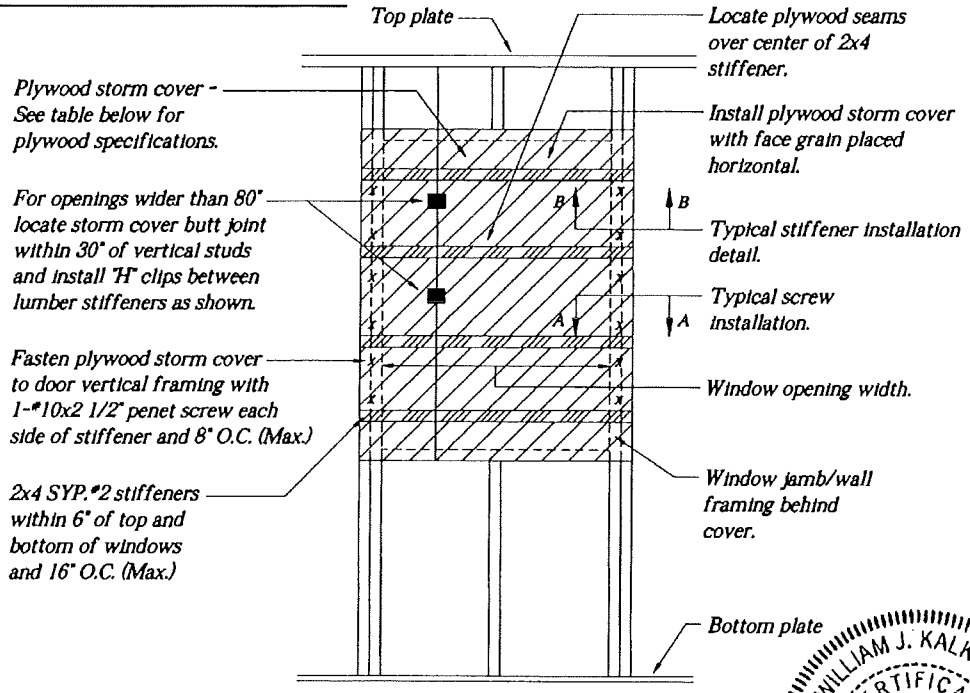

Wind Protection for Windows

WILLIAM J. KALKER, JR
CERTIFICATE
No 0033841
STATE OF
FLORIDA
PROFESSIONAL ENGINEER

12/30/97

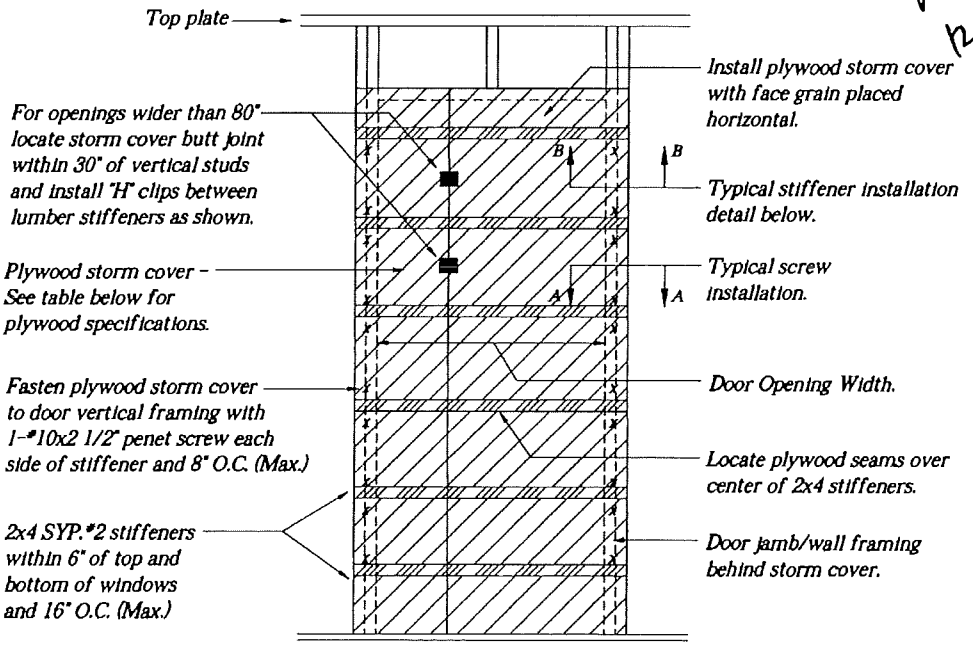

Wind Protection for Doors

Alternate Wind Protection for Windows and Doors

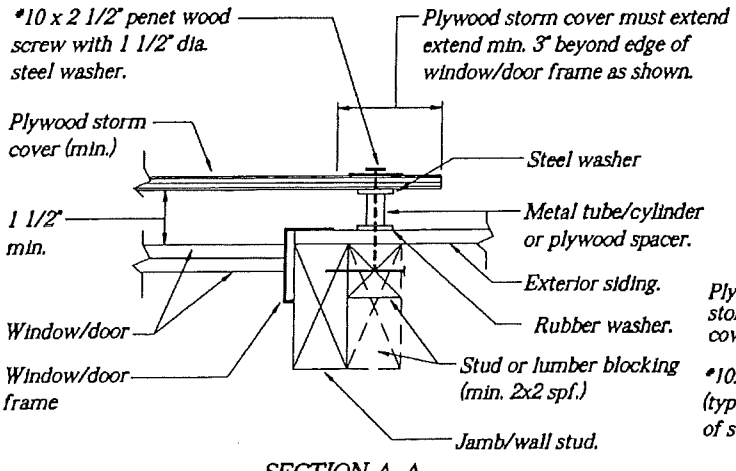

SECTION A-A

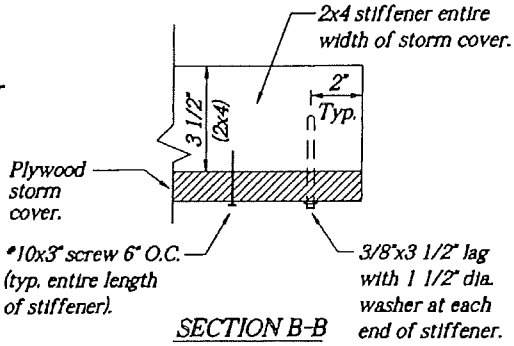

SECTION B-B

Note:

Installer must locate wood screws 3/4" +/- from edge of window/door frame and must verify that wood screw placement properly engages lumber framing.

Wind Protection Details

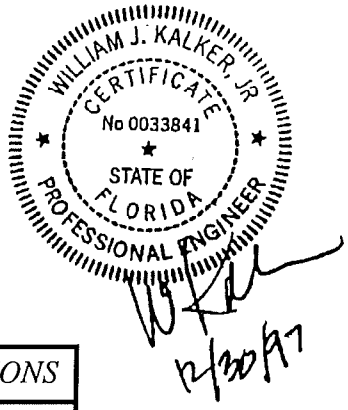

PLYWOOD STORM COVER SPECIFICATIONS		
Max. opening width	*Minimum thickness*	*Span index*
Up to 48"	*1/2"*	*24/0*
49"to 84"	*5/8"*	*32/16*
85"to 120"	*3/4"*	*48/24*

Wind Protection Exterior Sheathing

Notes:

1. All decorative shutters must be removed prior to installing protective covers.

2. When openings exceed 84" replace 2"x4" stiffeners with 2"x6" SPF #2 stiffeners.

3. After use, recommend that all sheathing be retained for possible reuse. Caulk any nail holes in the siding to prevent moisture from penetrating the exterior wall.

4. On bay windows, 3" extension beyond edge of window is not applicable, storm covering is to be butted up at angled areas of bays. Covering may have a maximum gap of 1/4" between pieces.

APPENDIX D

APPENDIX E

MHI
Manufactured Housing Institute

Housing Alert

APPROVED BY
NTA INC. Jan 15,2009
FEDERAL MANUFACTURED HOME CONSTRUCTION AND SAFETY STANDARDS

HUD Suspends Enforcement of Ground Anchor and Manufactured Pier Galvanization Requirements

On Monday, January 12, HUD informed MHI it will be suspending national enforcement of the galvanization requirements for anchor systems and manufactured piers that would have become effective February 2, under the new Model Manufactured Home Installation Standards (MMHIS), until the Manufactured Housing Consensus Committee reviews the matter further.

HUD is taking this action in response to an appeal made by MHI based on the lack of a demonstrated need for such a requirement to apply to the installation of all manufactured housing nationwide. MHI has maintained that weatherization requirements for anchor and pier systems should be based on local and regional conditions rather than a one size fits all approach as currently contained in the MMHIS. MHI has therefore been in discussions with HUD, requesting states be allowed to determine what, if any, minimum galvanization requirements are warranted in their own jurisdictions until the MHCC is able to recommend more practical standards that account for regional climatic and soil differences.

The following is the e-mail sent yesterday from Bill Matchneer, Associate Deputy Assistant Secretary, Office of Regulatory Affairs and Manufactured Housing, to SAA's and Primary Inspection Agencies (PIA).

'As requested by MHI, HUD has decided to temporarily suspend national enforcement of the weatherization and corrosion protection requirements for piers and anchor systems found in CFR 3285.308 and 402 due to take effect on February 2, 2009. As requested by the industry in June 2008, these requirements are currently under review by a workgroup of the Manufactured Housing Consensus Committee (MHCC). HUD will reconsider its decision to suspend enforcement of these weatherization and corrosion protection requirements once the MHCC has voted on any recommendations received from the current review process.

During rulemaking, HUD was not presented with a known history of actual failures of ground anchors or piers due to corrosion. Therefore, HUD is comfortable taking this

step to help the industry cope with a period of severe economic distress. HUD reminds all concerned, however, that these weatherization and corrosion protection issues should have been more fully addressed by the affected parties during the rulemaking process.

While HUD has decided to temporarily suspend national enforcement of the weatherization and corrosion protection requirements in CFR 3285.308 and 402, the states are free to make their own decisions with regard to galvanization or other weatherization and corrosion protection requirements for pier and anchor systems.

Primary Inspection Agencies are asked to advise the individual manufacturers they supervise of this decision.'

If you have any questions, please contact Jeff Inks at jinks@mfghome.org.

APPROVED BY
NTA INC.
Jan 15,2009
FEDERAL MANUFACTURED HOME
CONSTRUCTION AND SAFETY STANDARDS