SECTIONAL MANUFACTURED HOME INSTALLATION MANUAL

R A D C O FEDERAL MANUFACTURED HOUSING CONSTRUCTION & SAFETY STANDARDS 08 APPROVED

12/3/2010

Friendship Homes of Minnesota, Inc.
815 Budd Road
Montevideo, Minnesota 56265.

www.friendshiphomesmn.com

Serial Number: _____

Contents

INTRODUCTION……..1
PRE-INSTALLATION CONSIDERATIONS……..7
SITE PREPARAT ION……13
FOUNDATION SYSTEM……18
INSTALLATION……..38
CLOSURE (including Roof Ridge Completion)……..47
UTILITY CONNECTIONS……..54
ELECTRICAL SYSTEM……65
GROUND ANCHORING SYSTEM……..73
EQUIPMENT, OPTIONS, AND CONNECTIONS……..86
INSTALLATION COMPLETION AND INFORMATION……94
INDEX……96

R A D C O FEDERAL MANUFACTURED HOUSING CONSTRUCTION & SAFETY STANDARDS 08 APPROVED
12/3/2010

Introduction

1-1 PREAMBLE

This home was designed and constructed to meet or exceed the requirements of the National Manufactured Home Construction and Safety Standards which were in effect on the date of manufacture. This standard sets forth minimal requirements for the design, construction, electrical system, plumbing systems, heating system and thermal protection for manufactured homes designed to be used as single family dwellings.

These instructions are intended to instruct and assist a qualified licensed installer in the proper installation of this manufactured home. The installer must possess a valid installation license as a manufactured home installer. The installer should guarantee his work in writing for a reasonable time and should agree to realign the home on its supporting system in approximately 60 days from the time of initial installation.

This installation manual contains instructions that must be followed for the proper installation of the home. It complies with the HUD Model Manufactured Home Installation Standards. Please read all instructions and any other documents (including addendum pages and supplements) that may apply to this home prior to commencing site work or installation.

This installation manual covers permits and site work through final inspection of the installation. It covers multi-section homes installed over pier and anchor; foundation system designs, which may be required for a specific home and are included in the supplemental addendum. It contains instructions, including specifications and procedures, for the set and hookup of manufactured homes to be used as single-family dwellings. Supplemental addendum pages may be included with this manual. Supplements include requirements not covered in this manual or that supersede the manual instructions.

NOTE: Once the home installation is complete, leave this manual with the home.

The importance of correct installation cannot be over-emphasized. Correct installation is absolutely essential to homeowner satisfaction and the structural integrity of the home. A properly maintained installation will, under normal conditions, prevent the home from settling and avoid the possibility of incurring expensive repair bills. If the home is not set and maintained in proper alignment as it was designed, or if it is not set on a completely firm and proper foundation system as described in this instruction, certain portions of the home will undergo undue and unnatural structural strain. Such structural strain could lead to problems later. Typically, these problems appear in the form of the buckling, loosening or separating of wall coverings, exterior siding, floors and their covering, ceilings, metal roof membranes and miscellaneous fixed original fixtures and cabinets of the home. Other problems relating to installation include the leaking of doors, windows, roofs, ceilings, and exterior walls due to the loss of the weather seals in these areas, as well as the loss of proper operation of windows and doors and their locking devices.

It is of the utmost importance that the electrical feeder connection to the home be installed in accordance with the instructions in this manual and in the diagram located at the electrical distribution panel with the home. **IT IS ABSOLUTELY ESSENTIAL THAT A 4-WIRE FEEDER BE USED. WITHOUT THE 4-WIRE FEEDER THE CIRCUIT BREAKERS WILL NOT FUNCTION AND A SHORT CIRCUIT AT ANY TIME COULD CAUSE ELECTROCUTION.**

1-2 IMPORTANT NOTICES

TO INSTALLERS AND SITE PREPARATION CONTRACTORS:

- Noncompliance with these installation instructions may make you liable to the home owner or occupants for damages or injury resulting from the omissions or incorrect or defective work. Accordingly, care should be exercised in conforming to the requirements herein.
- Improperly vented skirting will cause moisture to accumulate beneath the home. When skirting the bottom of the home, a minimum 6 mil polyethylene vapor retarded must be installed over the surface of the ground and ventilation must be provided. The minimum vent area shall be 1 square foot for each 1,500 square feet of area under the home. The ventilators must be equally spaced along each side of the home and one ventilator must be placed within 3 feet of each end of the home.
- The home manufacturer is not responsible for installation or for the materials supplied by the set-up crew at the time of installation. The installer may be responsible for any deviations from the installation instructions of this manual.

- When an installer does not provide support and anchorage in accordance with the approved manufacturer's installation instructions, or encounters site conditions (such as areas that are subject to flood damage or high seismic risk) or other conditions that prevent the use of the instructions provided in this manual, the installer must obtain special site-specific instructions from the manufacturer, if available, or use a design approved by a registered professional engineer or registered architect that has been approved by the manufacturer and the manufacturer's DAPIA. The installer is responsible for determining whether the manufactured home site lies wholly or partly within a special flood hazard area.
- Installers must certify that the completed installation is in compliance with either the manufacturer's installation instructions or a design prepared by a registered professional engineer or registered architect.
- If the serial number of the home starts with the letters "AC", the Alternate Construction on-site check list supplied with the home must be completed and returned to the manufacturer in a timely manner.
- If the installer identifies failures of the home to comply with MHCSS, the installer must notify the manufacturer and the retailer.

TO THE HOMEOWNER:

- Please be advised that this company does not participate in retail sales. Our units are purchased by independent retailers, who in turn sell them to their customers. We, of course, have no control over, and are not aware of the terms and conditions of these sales, nor the manner in which these homes and home sites are prepared for final installation of the units. In like manner, we have no control or obligation in matters concerning after market items, such as installation, skirting, appliances and/or furnishings not on the factory invoice, porches, decks, awnings, ramadas, concrete work, utility connections, etc.
- To keep the home in compliance with its warranty, the home installation must follow the procedures described in this manual or other procedures approved by the manufacturer. Deviation from the instructions in this manual may void the home's warranty. Any alterations or changes to the home should be designed by a registered professional engineer or registered architect and may still be subject to warranty violations.

1-3 SAFETY CONSIDERATIONS

There are potential hazards associated with the installation of a manufactured home.

Only qualified licensed installers should install a manufactured home. As qualified professionals in the field of manufactured home installation, they are the experts and must be aware of the hazards and conditions faced. Warnings are published throughout this manual as reminders. These reminders may not cover all hazards, all potential hazards, or all possible consequences of improper or unsafe installation practices.
Installation crews should be trained in the skills required and be supervised by experienced personnel. Installers should regularly inspect work performed by crews and subcontractors. Obey OSHA regulations, particularly those related to home construction, such as Title 29 Code of Regulations Part 1926. For copies of OSHA regulations, call (202) 512-1800 or visit **www.osha.gov** on the web.

1-4 FEDERAL PREEMPTION

This home was engineered, constructed, and inspected in conformance with the requirements of the Federal Manufactured Home Construction and Safety Standards (24 CFR Part 3280, commonly referred to as the "HUD Code") as regulated and amended by the US Department of Housing and Urban Development which were in effect on the date of manufacture. These Standards set forth minimum requirements for the design and construction of manufactured homes designed to be used as dwellings.

Individual states, counties and cities shall have no authority to establish standards regarding the construction or safety of a manufactured home. A metal certification label is affixed to each section of the home to certify that it has been constructed and inspected to comply with these Standards. The design plans and in-plant construction of all homes are inspected by independent third party agencies to assure compliance with the Standards.

The installation of the home and any alterations made to the home shall conform to the requirements of the Federal Manufactured Home Construction and Safety Standards and the Model Manufactured Home Installation Standards. These installation instructions are minimum requirements. Applicable local or state laws may have more stringent installation requirements than outlined in this manual and must be followed.

Consult with the local authority having jurisdiction (LAHJ) for regulations that may require licenses and/or permits or which may affect procedures described in this manual.

1-5 ENGINEER'S STAMP

Certain pages of this manual display the seal of a registered professional engineer or registered architect. Federal guidelines only require the seal from one state to be displayed, but the details herein apply to all states.

1-6 ALTERNATIVE FOUNDATION SYSTEMS

Alternative foundation systems or designs are permitted if they are approved by the home manufacturer and the manufacturer's DAPIA, and are in accordance with either of the following:

- Systems or designs are manufactured and installed in accordance with their listings by a nationally recognized testing agency based on a nationally recognized testing protocol; or
- System designs are prepared by a registered professional engineer or a registered architect or tested and certified by a registered professional engineer or registered architect in accordance with acceptable engineering practice and are manufactured and installed so as not to take the home out of compliance with the Manufactured Home Construction and Safety Standards.

1-7 DISPLAY AND STORAGE OF THE HOME

WEATHER PROTECTION

If the installation is not started immediately upon delivery of the home, the retailer and/or installer has the responsibility to ensure that the exterior weather protection covering of marriage walls and the roof of homes with hinged roofs has not been damaged during shipment or while in storage on the retailer's lot or at the home site before installation is complete. Inspect the home immediately upon the delivery and frequently during storage. Promptly repair tears in the home closure materials using a contractors sheathing tape designed for use with polyethylene sheeting to prevent damage from the elements. Inspect and repair roof shingles and siding as needed.

SUPPORTING A HOME FOR DISPLAY

When a new or used manufactured home is to be displayed at a retail location, temporarily block and support the home. Set up multi-section homes with single block piers spaced no further apart than 10 feet o.c. beneath each I-beam. The tire and axle system may be used as one of these required supports. Locate the first pier no further than two feet from the rear end of the home (Figure 1). Place additional piers along the perimeter on either side of openings greater than four feet (i.e. sliding glass doors, bay windows, etc.). Locate additional piers along the marriage line under support columns.

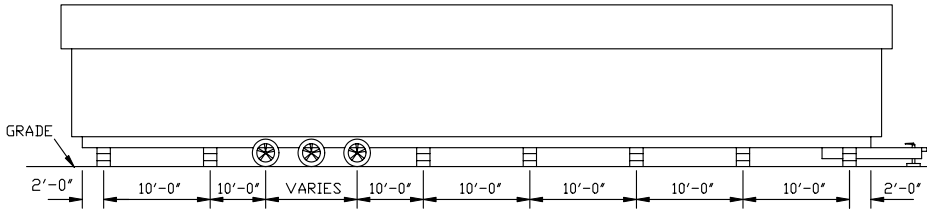

FIGURE 1-1

For all homes, place footings below each pier. Footings may be placed directly on the surface grade without excavation and may be ABS pads or 4 inch thick pre-cast concrete pads, 24 inches square.

SUPPORTING A HOME FOR TEMPORARY STORAGE

To prevent damage to homes being stored on the retailer's lot or home site, but not on display (i.e. people should not be permitted inside the home), for a period exceeding 30 days, locate piers below each I-beam no further than two feet from each end of the home and at the approximate center of the home length where

the distance between the front of the floor and the first axle is greater than 22 feet for homes16/32 feet wide and 24 feet for homes up to 14/28 feet wide.

1-8 ABBREVIATIONS

ABS	Acrylonitrile Butadiene Styrene	**max.**	Maximum
ANSI	American National Standards Institute	**MHCSS**	Manufactured Home Construction and Safety Standards
APA	American Plywood Association	**MMHIS**	Model Manufactured Home Installation Standards
ASTM	American Society for Testing and Materials	**min.**	Minimum
AWPA	American Wood Preservers Association	**mph**	Mile(s) per hour
CFM	Cubic feet per minute	**NEC**	National Electric Code
CFR	Code of Federal Regulations	**NFIP**	National Flood Insurance Program
DWV	Drain, Waste, Vent	**NFPA**	National Fire Protection Association
EMT	Electrical metallic tubing	**o.c.**	On center
FEMA	Federal Emergency Management Agency	**OSHA**	Occupational Safety and Health Administration
ft	Foot/feet	**oz**	Ounce(s)
ga	Gauge	**p.**	Page
HUD	US Department of Housing and Urban Development	**psf**	Pounds per square foot
in	Inch(es)	**psi**	Pounds per square inch
LAHJ	Local Authority Having Jurisdiction	**SAA**	State Administrative Agency
lb(s)	Pound(s)	**sq ft**	Square foot/feet

1-9 DEFINITIONS

ABS FOOTING PAD. A listed, pre-manufactured footing, used to support the piers beneath the home (must be installed in strict accordance with their manufacturer's printed instructions).

ANCHOR ASSEMBLY. Any device or other means designed to transfer loads to the ground.

ANCHORING EQUIPMENT. Ties, straps, cables, turnbuckles, chains, and other approved components, including tensioning devices that are used to secure a manufactured home to anchor assemblies.

ANCHORING SYSTEM. A combination of anchoring equipment and anchor assemblies that will, when properly designed and installed, resist the uplift, overturning, and lateral forces on the manufactured home and on its support and foundation system.

ARID REGION. Area subjected to 15 inches or less of annual rainfall.

BASEMENT. A load-bearing perimeter wall foundation that includes habitable space (finished or unfinished, heated or unheated) partly or completely below grade.

COMFORT COOLING CERTIFICATE. A certificate permanently affixed to an interior surface of the home, often part of the Data Plate, specifying the factory design and preparations for air conditioning the manufactured home.

CRAWLSPACE. The space underneath the home's floor system, enclosed with either load- or non-load bearing perimeter walls. The ground may be covered with a concrete slab or by a plastic ground cover. Crawlspace walls must be vented.

CROSSOVERS. Utility interconnections between sections of multi-section homes, including heating and cooling ducts, electrical circuits, and water pipes, drain plumbing, and gas lines.

DATA PLATE. An information sheet located at the main electrical panel, in the utility room, in a bedroom closet, or in a cabinet in the kitchen. It contains a unique identification number and identifies the wind zone, roof load zone, and climatic zone for which the home was constructed.

DESIGN APPROVAL PRIMARY INSPECTION AGENCY (DAPIA). A state or private organization which evaluates, approves, or disapproves manufactured home designs.

DESIGN FROST DEPTH. The minimum depth at which the soil temperature remains above freezing for an extreme winter event, based on analysis, local regulations, or experience.

DIAGONAL STRUT/ADJUSTABLE OUTRIGGER. A device listed for the support perimeter loads at the ends of door and window openings.

DIAGONAL TIE. A tie intended to resist horizontal or shear forces, but which may resist vertical, uplift, and overturning forces.

FLOOD HAZARD AREA. The greater of either the special flood hazard area shown on the flood insurance rate map, the area subject to flooding during the design flood and shown on the LAHJ's flood hazard map, or otherwise legally designated.

FOOTING. That portion of the support system that transmits loads directly to the soil.

FOUNDATION SYSTEM. A system of support that is capable of transferring all design loads to the ground, including elements of the support system, as defined herein, or a site-built permanent foundation.+

GROUND ANCHOR. A specific anchoring assembly device designed to transfer home loads to the ground.

H-BEAM. Steel H-beams, also called Wide Flange beams, are often used to support a home over a basement or crawlspace. They span across the foundation from sidewall to sidewall, typically with an intermediate support pier and footing (typically in the center point resulting in a line of piers under the centerline of a double section home).

INFORMATION PACKET. A set of important documents provided with the home including warranties, information on high wind coverage, and other features of the specific home.

LABELED. Equipment or materials to which has been attached a label, symbol, or other identifying mark of a certified testing laboratory, inspection agency, or other an organization concerned with product evaluation. The label indicates compliance with nationally recognized standards or tests to determine suitable usage in a specified manner.

LICENSED INSTALLER. Any individual that has met the requirements for installation license and has a valid license issued by HUD or is certified or licensed to perform manufactured home installations in a state with a qualifying installation program.

INSTALLATION LICENSE. The proof that an installer meets the requirements for installing manufactured homes under the Manufactured Home Installation program.

LISTED OR CERTIFIED. Included in a list published by a nationally recognized testing laboratory, inspection agency, or other organization concerned with product evaluation that maintains periodic inspection of production of listed equipment or materials, and whose listing states either that the equipment or material meets nationally recognized standards or has been tested and found suitable for use in a specified manner.

LOAD-BEARING PERIMETER WALL FOUNDATION. A support system for the home whereby the home is mechanically fastened to a structural wall(s) that transfers gravity, lateral, and uplift loads to the ground.

LOCAL AUTHORITY HAVING JURISDICTION (LAHJ). The state, city, county, municipality, utility, or organization that has local responsibilities that must be complied with during the installation of a manufactured home.

LONGITUDINAL TIE. A tie intended to resist horizontal or shear forces applied to the ends of the home, but which may also resist vertical and uplift forces.

LOWEST FLOOR. The floor of the lowest enclosed living area of the manufactured home.

MUST. Indicates a mandatory requirement.

N/A. Indicates not applicable.

PIER. That portion of the support system between the footing and the manufactured home, exclusive of shims. Types of piers include, but are not limited to: (1) manufactured steel stands; (2) pressure-treated wood; (3) manufactured concrete stands; (4) concrete blocks; and (5) portions of foundation walls.

PIER AND GROUND ANCHOR FOUNDATION. A support system for the home that employs piers under the chassis and other locations to support gravity loads and employs ground anchors and tie downs (the stabilizing system) to resist lateral and uplift loads.

PERIMETER BLOCKING. Regularly spaced piers supporting the sidewalls and marriage line of the home. Some homes require perimeter blocking in addition to supports under the home's frame.

QUALIFIED. Has the necessary knowledge and skills gained from experience and training that will allow performance of the job safely, competently, and in accordance with the manufacturer's installation manual and all applicable codes, standards, rules, and regulations.

RAMADA. Any freestanding roof or shade structure, installed or erected over a manufactured home or any portion thereof.

SHOULD. Indicates a recommendation that is strongly advised but not mandatory.

SHALL. Indicates a mandatory requirement.

SITE FOR A MANUFACTURED HOME. A designated parcel of land designed for the accommodation of one manufactured home, its accessory buildings or structures, and accessory equipment, for the exclusive use of the occupants of the home.

SKIRTING. A weather-resistant material used to enclose the perimeter, under the living area of the home, from the bottom of the manufactured home to grade.

STABILIZING DEVICIES. All components of the anchoring and support systems, such as piers, footings, ties, anchoring equipment, anchoring assemblies, or any other equipment, materials and methods of construction, that support and secure the manufactured home to the ground.

SUPPORT SYSTEM. Pilings, columns, a combination of footings, piers, foundation walls, caps, and shims and any combination thereof that will, when properly installed, support and secure the manufactured home to the ground.

TIE. Straps, cable, or securing devices used to connect the manufactured home to anchoring assemblies.

ULTIMATE LOAD. The absolute maximum magnitude of load that a component or system can sustain, limited only by failure.

UTILITY CONNECTION. The connection of the manufactured home to utilities that include, but are not limited to, electricity, water, sewer, gas, or fuel oil.

VERTICAL TIE. A tie intended to resist uplifting and overturning forces.

WIND ZONE. The areas designated on the Basic Wind Zone Map, as further defined by the Manufactured Home Construction and Safety Standards.

Pre-Installation Considerations

2-1 LOCATE THE DATA PLATE

To properly access the support and anchoring needs of the home the design criteria the home was built to meet must be known. This information is listed on the Data Plate usually posted on a wall in the master bedroom closet, or alternately, near the distribution panel board or in the utility room.

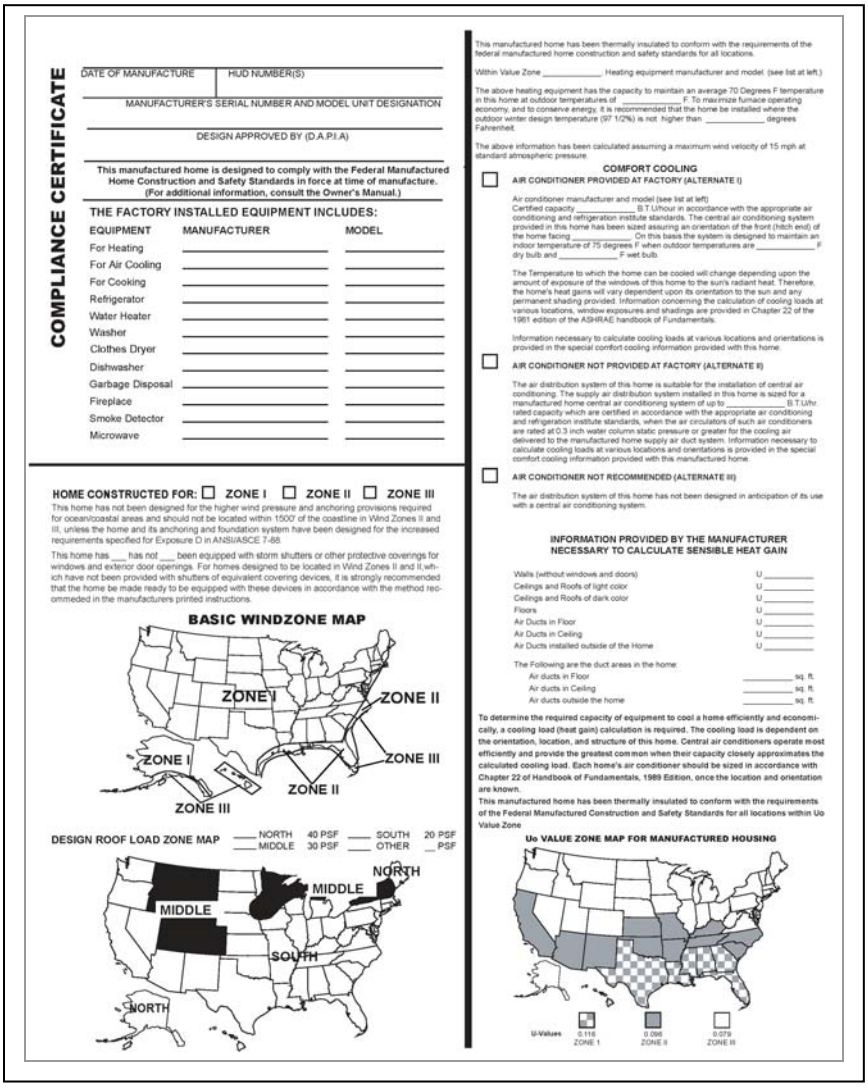

COMPLIANCE CERTIFICATE

DATE OF MANUFACTURE | HUD NUMBER(S)

MANUFACTURER'S SERIAL NUMBER AND MODEL UNIT DESIGNATION

DESIGN APPROVED BY (D.A.P.I.A)

This manufactured home is designed to comply with the Federal Manufactured Home Construction and Safety Standards in force at time of manufacture. (For additional information, consult the Owner's Manual.)

THE FACTORY INSTALLED EQUIPMENT INCLUDES:

EQUIPMENT	MANUFACTURER	MODEL
For Heating		
For Air Cooling		
For Cooking		
Refrigerator		
Water Heater		
Washer		
Clothes Dryer		
Dishwasher		
Garbage Disposal		
Fireplace		
Smoke Detector		
Microwave		

HOME CONSTRUCTED FOR: ☐ ZONE I ☐ ZONE II ☐ ZONE III

This home has not been designed for the higher wind pressure and anchoring provisions required for ocean/coastal areas and should not be located within 1500' of the coastline in Wind Zones II and III, unless the home and its anchoring and foundation system have been designed for the increased requirements specified for Exposure D in ANSI/ASCE 7-88.

This home has ___ has not ___ been equipped with storm shutters or other protective coverings for windows and exterior door openings. For homes designed to be located in Wind Zones II and II, which have not been provided with shutters of equivalent covering devices, it is strongly recommended that the home be made ready to be equipped with these devices in accordance with the method recommeded in the manufacturers printed instructions.

BASIC WINDZONE MAP

DESIGN ROOF LOAD ZONE MAP ___ NORTH 40 PSF ___ SOUTH 20 PSF ___ MIDDLE 30 PSF ___ OTHER __ PSF

This manufactured home has been thermally insulated to conform with the requirements of the federal manufactured home construction and safety standards for all locations.

Within Value Zone _____. Heating equipment manufacturer and model. (see list at left.)

The above heating equipment has the capacity to maintain an average 70 Degrees F temperature in this home at outdoor temperatures of _____ F. To maximize furnace operating economy, and to conserve energy, it is recommended that the home be installed where the outdoor winter design temperature (97 1/2%) is not higher than _____ degrees Fahrenheit.

The above information has been calculated assuming a maximum wind velocity of 15 mph at standard atmospheric pressure.

COMFORT COOLING

☐ AIR CONDITIONER PROVIDED AT FACTORY (ALTERNATE I)

Air conditioner manufacturer and model (see list at left)
Certified capacity _____ B.T.U/hour in accordance with the appropriate air conditioning and refrigeration institute standards. The central air conditioning system provided in this home has been sized assuring an orientation of the front (hitch end) of the home facing _____. On this basis the system is designed to maintain an indoor temperature of 75 degrees F when outdoor temperatures are _____ F dry bulb and _____ F wet bulb.

The Temperature to which the home can be cooled will change depending upon the amount of exposure of the windows of this home to the sun's radiant heat. Therefore, the home's heat gains will vary dependent upon its orientation to the sun and any permanent shading provided. Information concerning the calculation of cooling loads at various locations, window exposures and shadings are provided in Chapter 22 of the 1981 edition of the ASHRAE handbook of Fundamentals.

Information necessary to calculate cooling loads at various locations and orientations is provided in the special comfort cooling information provided with this home.

☐ AIR CONDITIONER NOT PROVIDED AT FACTORY (ALTERNATE II)

The air distribution system of this home is suitable for the installation of central air conditioning. The supply air distribution system installed in this home is sized for a manufactured home central air conditioning system of up to _____ B.T.U/hr. rated capacity which are certified in accordance with the appropriate air conditioning and refrigeration institute standards, when the air circulators of such air conditioners are rated at 0.3 inch water column static pressure or greater for the cooling air delivered to the manufactured home supply air duct system. Information necessary to calculate cooling loads at various locations and orientations is provided in the special comfort cooling information provided with this manufactured home.

☐ AIR CONDITIONER NOT RECOMMENDED (ALTERNATE III)

The air distribution system of this home has not been designed in anticipation of its use with a central air conditioning system.

INFORMATION PROVIDED BY THE MANUFACTURER NECESSARY TO CALCULATE SENSIBLE HEAT GAIN

Walls (without windows and doors)	U _____
Ceilings and Roofs of light color	U _____
Ceilings and Roofs of dark color	U _____
Floors	U _____
Air Ducts in Floor	U _____
Air Ducts in Ceiling	U _____
Air Ducts installed outside of the Home	U _____

The Following are the duct areas in the home:

Air ducts in Floor	_____ sq. ft.
Air ducts in Ceiling	_____ sq. ft.
Air ducts outside the home	_____ sq. ft.

To determine the required capacity of equipment to cool a home efficiently and economically, a cooling load (heat gain) calculation is required. The cooling load is dependent on the orientation, location, and structure of this home. Central air conditioners operate most efficiently and provide the greatest common when their capacity closely approximates the calculated cooling load. Each home's air conditioner should be sized in accordance with Chapter 22 of Handbook of Fundamentals, 1989 Edition, once the location and orientation are known.

This manufactured home has been thermally insulated to conform with the requirements of the Federal Manufactured Construction and Safety Standards for all locations within Uo Value Zone

Uo VALUE ZONE MAP FOR MANUFACTURED HOUSING

DATA PLATE

2-2 CONFIRM WIND ZONE

From Table 2-1, identify the wind zone for the home. Verify that the home conforms to the following rules and any special requirements determined by the local authority having jurisdiction (LAHJ).

- No home may be located in a higher wind zone than that indicated on the data plate. (Example: a home designed for Wind Zone II cannot be placed in Wind Zone III.)
- A home may be located in a lower wind zone that that indicated on the data plate. (Example: a home designed for Wind Zone II can be placed in either Wind Zone II or I.)
- Homes located within 1,500 feet of the coastline in Wind Zones II and III must be designed to withstand exposure 'D' conditions. This will be indicated on the data plate.

TABLE 2-1. WIND ZONE BY LOCALITY

Wind Zone I	
All areas except those areas listed below within Wind Zone II or III.	
Wind Zone II	
Alabama	Counties of Baldwin and Mobile
Florida	All counties except those listed below as within Wind Zone III
Georgia	Counties of Bryan, Camden, Chatham, Glynn, Liberty, McIntosh
Louisiana	Parishes of Acadia, Allen, Ascension, Assumption, Calcasieu, Cameron, East Baton Rouge, East Feliciana, Evangeline, Iberia, Iberville, Jefferson Davis, Lafayette, Livingston, Pointe Coupee, St. Helena, St. James, St. John the Baptist, St. Landry, St. Martin, St. Tammany, Tangipahoa, Vermillion, Washington, West Baton Rouge, and West Feliciana.
Maine	Counties of Hancock and Washington
Massachusetts	Counties Barnstable, Bristol, Dukes, Nantucket, and Plymouth
Mississippi	Counties of George, Hancock, Harrison, Jackson, Pearl River, and Stone
North Carolina	Counties of Beaufort, Brunswick, Camden, Chowan, Columbus, Craven, Currituck, Jones, New Hanover, Onslow, Pamlico, Pasquotank, Pender, Perquimans, Tyrrell, and Washington
South Carolina	Counties of Beaufort, Berkeley, Charleston, Colleton, Dorchester, Georgetown, Horry, Jasper, and Williamsburg
Texas	Counties of Aransas, Brazoria, Calhoun, Cameron, Chambers, Galveston, Jefferson, Kennedy, Kleberg, Matagorda, Nueces, Orange, Refugio, San Patricio, and Willacy
Virginia	Cities of Chesapeake, Norfolk, Portsmouth, Princess Anne, and Virginia Beach
Wind Zone III	
Hawaii	Entire State
Alaska	Coastal Regions (as determined by the 90 mph isotach on the ANSI/ASCE 7-88 map)
Florida	Counties of Broward, Charlotte, Collier, Dade, Franklin, Gulf, Hendry, Lee, Martin, Manatee, Monroe, Palm Beach, Pinellas, and Sarasota
Louisiana	Parishes of Jefferson, La Fourche, Orleans, Plaquemines, St. Bernard, St. Charles, St. Mary, and Terrebonne
North Carolina	Counties of Carteret, Dare, and Hyde
Other	All regions of the U.S. Territories of American Samoa, Guam, Northern Mariana Islands, Puerto Rico, Trust Territory of the Pacific Islands, and the US Virgin Islands

2-3 CONFIRM THERMAL ZONE

From Table 2-2, identify the thermal (UO) zone for the home. Verify that the home conforms to the following rules.

- No home may be located in an area with a higher thermal zone number than that indicated on the data plate. (Example: a home designed for Thermal Zone 2 cannon be placed in Thermal Zone 3.)
- A home may be located in a lower thermal zone than that indicated on the data plate. (Example: a home designed for Thermal Zone 2 may be placed in either Thermal Zone 2 or 1.)

- In no case may a home designated for installation in the “Humid & Fringe Climate” as identified on the data plate, be located outside of this region (Table 2-2)

TABLE 2-2. HUMID AND FRINGE CLIMATE ZONES

Humid and Fringe Climate Zone	
Alabama	Counties of Baldwin, Barbour, Bullock, Butler, Choctaw, Clark, Coffee, Conecuh, Covington, Crenshaw, Dale, Escambia, Geneva, Henry, Houston, Lowndes, Marengo, Mobile, Monroe, Montgomery, Pike, Washington, and Wilcox
Florida	All counties and locations
Georgia	Counties of Appling, Atkinson, Bacon, Baker, Ben Hill, Berrien, Brantley, Brooks, Bryan, Calhoun, Camden, Charleton, Chatham, Clay, Clinch, Coffee, Colquitt, Cook, Crisp, Decatur, Dougherty, Early, Echols, Effingham, Evans, Glynn, Grady, Irwin, Jeff Davis, Lanier, Lee, Liberty, Long, Lowndes, McIntosh, Miller, Mitchell, Pierce, Quitman, Randolph, Seminole, Tattnall, Terrell, Thomas, Tift, Turner, Ware, Wayne, and Worth
Hawaii	All counties and locations
Louisiana	All counties and locations
Mississippi **Mississippi Cont’**	Counties of Adams, Amite, Claiborne, Clarke, Copiah, Covington, Forrest, Franklin, George, Greene, Hancock, Harrison, Hinds, Issaquena, Jackson, Jasper, Jefferson, Jefferson Davis, Jones, Lamar, Lawrence, Lincoln, Marion, Pearl River, Perry, Pike, Rankin, Simpson, Smith, Stone, Walthall, Warren, Wayne, and Wilkinson
North Carolina	Counties of Brunswick, Carteret, Columbus, New Hanover, Onslow, and Pender
South Carolina	Counties of Beaufort, Berkeley, Charleston, Colleton, Dorchester, Georgetown, and Horry
Texas	Counties of Anderson, Angelina, Aransas, Atascosa, Austin, Bastrop, Bee, Bexar, Brazoria, Brooks, Burleson, Cardwell, Calhoun, Cameron, Camp, Cass, Chambers, Cherokee, Colorado, Comal, De Witt, Dimmit, Duval, Falls, Fayette, Fort Bend, Franklin, Freestone, Frio, Galveston, Goliad, Gonzales, Gregg, Grimes, Guadalupe, Hardin, Harris, Harrison, Hays, Henderson, Hidalgo, Hopkins, Houston, Jackson, Jasper, Jefferson, Jim Hogg, Jim Wells, Karnes, Kaufman, Kennedy, Kinney, Kleberg, LaSalle, Lavaca, Lee, Leon, Liberty, Limestone, Live Oak, Madison, Marion, Matagorda, Maverick, McMullen, Medina, Milam, Montgomery, Morris, Nacogdoches, Navarro, Newton, Nueces, Orange, Panola, Polk, Rains, Refugio, Robertson, Rush, Sabine, San Augustine, San Jacinto, San Patricio, Shelby, Smith, Starr, Titus, Travis, Trinity, Tyler, Upshur, Uvalde, Val Verde, Van Zandt, Victoria, Walker, Waller, Washington, Webb, Wharton, Willacy, Williamson, Wilson, Wood, Zapata, and Zavala

2-4 CONFIRM ROOF LOAD ZONE

From Table 2-3, identify the Roof Load Zone for the home. Verify that the home conforms to the following rules.

- No home may be placed in an area with a higher roof load than that indicated on the data plate. (Example: a home designed for the South (20 psf), Roof Load Zone cannot be placed in the Middle (30 psf) Roof Load Zone).
- A home may be located in an area with a lower roof load than that indicated on the data plate. (Example: a home designed for the Middle (30 psf) Roof Load Zone may be placed in the South (20 psf) Roof Load Zone).
- There are special high roof load areas (primarily in mountains) not shown on the map. Contact the LAHJ or the SAA listed in the Home Owners Manual for information about these areas. The home’s data plate will indicate if the home has been designed for one of these high roof load areas.

- Ramadas may be used in areas with roof live loads greater than that shown on the data plate. Ramadas are to be self-supporting, except that any connection to the home must be for weatherproofing only.

TABLE 2-3. ROOF LOADS BY LOCALITY

North (40 psf roof load)	
Alaska	All counties
Maine	Aroostook, Piscataquis, Somerset, Penobscot, Waldo, Knox, Hancock, Washington
Middle (30 psf roof load)	
Colorado	All Counties
Idaho	All Counties
Iowa	Buena Vista, Butler, Calhoun, Cerro Gordo, Cherokee, Chickasaw, Clay, Dickinson, Emmet, Floyd, Franklin, Hamilton, Hancock, Hardin, Howard, Humboldt, Ida, Kossuth, Lyon, Mitchell, O'Brien, Osceola, Palo Alto, Plymouth, Pocahontas, Sac, Sioux, Webster, Winnebago, Worth, Wright
Maine	Counties of Androscoggin, Cumberland, Franklin, Kanabec, Lincoln, Oxford, Sagadahoc, York
Massachusetts	County of Essex
Michigan	Counties of Alger, Alcona, Alpena, Antrim, Baraga, Benzie, Charlevoix, Cheboygan, Chippewa, Crawford, Delta, Dickson, Emmet, Gogebic, Grand Traverse, Houghton, Iron, Kalkaska, Keweenaw, Leelanau, Luce, Mackinac, Marquette, Menominee, Missaukee, Montmorency, Ogemaw, Ontonagon, Oscoda, Otsego, Presque Isle, Roscommon, Schoolcraft, Wexford
Minnesota	Counties of Aitkin, Anoka, Benton, Blue Earth, Brown, Cass, Carlton, Carver, Chippewa, Chisapo, Cook, Cotton-wood, Crow Wing, Dakota, Dodge, Douglas, Faribault, Fillmore, Freeborn, Goodhue, Grant, Hennepin, Hubbard, Itasca, Isanti, Jackson, Kandiyohi, Kanabec, Koochiching, Lac qui Parle, Lake, Le Sueur, Lincoln, Lyon, McLeod, Meeker, Morrison, Millie Lacs, Mower, Martin, Murray, Nicollet, Nobles, Olmsted, Pipestone, Pine, Pope, Ramsey, Redwood, Renville, Rice, Rock, St. Louis, Sibley, Scott, Steele, Sherburne, Swift, Stearns, Stevens, Todd, Wadena, Wright, Washington, Wabasha, Winona, Waseca, Watonwan, Yellow Medicine.
Montana	All Counties
New Hampshire	All Counties
New York	Counties of Cayuga, Clinton, Essex, Erie, Franklin, Fulton, Genesee, Hamilton, Herkimer, Jefferson, Lewis, Livingston, Madison, Monroe, Montgomery, Niagara, Oneida, Onondaga Ontario, Orleans, Oswego, SI. Lawrence, Saratoga, Schenectady, Seneca, Warren, Washington, Wayne, Wyoming, Yates
South Dakota	Counties of Brookings, Clay, Codington, Deuel, Grant, Hamlin, Hanson, Hutchinson, Kingsbury, Lake, Lincoln, McCook, Miner, Minnehaha, Moody, Turner, Union, Yankee
Utah	All Counties
Vermont	Counties of Addison, Caledonia, Chittenden, Essex, Franklin, Grand Isle, Lamoille, Orange, Orleans, Rutland, Washington, Windsor
Wisconsin	Counties of Ashland, Bayfield, Barron, Buffalo, Burnett, Clark, Chippewa, Door, Douglas, Dunn, Eau Claire, Florence, Forest, Iron, Jackson, Langlade, Lincoln, Marathon, Marinette, Menominee, Oconto, Oneida, Pepin, Pierce, Polk, Price, Rush, St. Croix, Sawyer, Taylor, Trempealeau, Vilas, Washburn
Wyoming	All Counties
South (20 psf roof load)	
Other	The states and counties not listed for the Middle or North roof load zone above are deemed to be within the South roof load zone.

2-5 CONFIRM THE HOME SITE

Is the home being placed in the appropriate wind, roof load, and thermal zones?

- Yes; continue with the installation.
- No; stop installation and notify the retailer immediately**.**

2-6 CHECK LOCAL CODES AND SECURE PERMITS

Local regulations may set conditions for the siting and installation of a manufactured home. Consult the LAHJ for the specific local requirements, including:

- Building codes that may affect the construction of site built structures and infrastructure.
- Local requirements regulating the installation of manufactured homes.
- Setback requirements for property lines, streets, yards, and courts.
- Fire separation distances.
- Development covenants for the specific property
- The locations of flood hazard areas and any special foundation requirements for homes installed in those areas.
- In some areas, building permits are required to install manufactured homes. Prior to making any alteration to the site and the home, contact the LAHJ to determine if plan approval and permits are required.

2-7 SUPPORT AND ANCHORING SYSTEMS

The support and anchoring systems described and illustrated in this manual are for pier over footing and strap and anchor. If the home requires a permanent foundation by design, additional information was included in the supplemental addendum.

Where different support and anchoring designs are desired or required due to special site conditions, such as areas subject to flood or high seismic risk, the designs must be prepared and certified by a registered professional engineer or registered architect. These designs must in turn be approved by the manufacturer and the manufacturer's DAPIA.

A proprietary foundation and/or anchoring system may be used to support the home for gravity loads (i.e. roof, wall, and floor including safety factors) and anchor the home against wind loads (i.e. horizontal and up-lift including safety factors) providing it complies with all of the following:

- It has been evaluated and approved by a registered professional engineer or registered architect (any state) as required by the MHCSS;
- Its design meets the requirements of the above named Standard;
- It is listed by a nationally recognized testing agency;
- The width of the home is within the system design parameters;
- The roof pitch of the home is within the system design parameters;
- Support points along the home frame members do not exceed 8 feet on centers.
- The home is not required by design to be fully supported by a foundation wall.
- Requirements for support along the center line of the home, at exterior sidewall openings, exterior doors and for special loadings such as stone-front fireplaces as well as special ground anchor conditions along the center line, at porch columns, and as otherwise described in this manual must be adhered to.

Typically, such proprietary systems and equipment are manufactured by companies including Minute Man Anchors, Inc., Oliver Technologies, Inc., and Tie Down Engineering. These systems are acceptable to this manufacturer and it's DAPIA. Proprietary systems from other manufacturers may be used as described above when they have been approved as required.

2-8 AREAS SUBJECT TO FLOODING

Manufactured homes located wholly or partly within special flood hazard areas must be installed on foundations engineered to incorporate methods and practices that minimize flood damage during the base flood, in accordance with the LAHJ. Appliances installed on the manufactured home site in flood hazard

areas, their air intakes, and exhausts must be anchored and elevated to or above the same elevation as the lowest elevation of the lowest floor of the home.

CAUTION: The foundation specifications contained in this manual are not intended to address flood loads. If the home is to be placed in a flood plain, consult a registered professional engineer or registered architect for the design of the support and anchoring systems.

Site Preparation

3-1 SITE SELECTION

The home site must be selected so as to provide a reasonably level surface in the area of home placement. This area must be undisturbed soil or compacted fill. Any required fill must be inorganic "controlled fill" applied in a maximum of four inch layers, compacted between each layer to at least 95% of its maximum relative density. This is necessary to prevent the soil from settling and damaging the foundation or allowing it to settle.

3-2 FIRE SEPARATION

When selecting the area of home placement make certain that no portion of the home will be closer than 10 feet side to side, 8 feet end to side, or 6 feet end to end from any other manufactured home or, where the home is sited in a manufactured home community, no other building unless the exposed composite walls and roof of either structure are without openings and constructed of materials that will provide a 1-hour fire resistance rating or the structures are separated by a 1-hour fire-rated barrier (NFPA 501A 2003).

In addition to the above separation requirements, local fire codes may have further impact on the siting of the home. Contact the LAHJ for any local requirements.

3-3 SITE ACCESS

Planning the route to the site is typically the responsibility of the retailer or transportation company. Whoever is responsible must secure transportation permits from the states, counties, and/or cities through which the home will pass.

In planning the route, avoid obstructions that might interfere with the passage of the home, such as low hanging wires and trees, low overpasses, and bridges not suitable for the load. Contact the utility company if wires need to be moved. Do not allow branches, bushes, or other foliage to scrape against the home as the home is moved to the site. Avoid ditches, berms, steep slopes, and soft ground. Identify and fill any holes and soft spots into which the transporter's and home's wheels may sink. Avoid moving over steep changes in grade.

If required, provide for home storage and staging areas on the site. Plan the delivery and staging of home sections and materials so that after all deliveries are complete, home sections and materials can be accessed for use and installed in the appropriate sequence. Position home sections so they do not have to be rotated or excessively maneuvered during the installation process. Plan for temporary needs such as dumpsters, portable toilets, crew parking, delivery vehicle drop-offs, and concrete mixer deliveries at the home site.

Before moving the manufactured home to the site inform the LAHJ, make sure the site is prepared, permits have been obtained, pre-delivery inspections made, and utilities are available.

3-4 SITE PLAN

Plan the home location and layout in keeping with the information presented in the Introduction and Pre-Installation sections of this manual, check local codes, and secure permits. Contact utilities for locations of existing infrastructure, such as underground cables, pipes, and electrical lines.
When planning the site improvements, consider the following:

- The home site must provide a reasonably level surface in the area of home placement.
- Avoid contact with large trees, steep slopes, poorly drained areas, and potential flood zones.
- Preserve trees and shrubs for shade, visual screens, and windbreaks.
- Plan the driveway, parking areas, septic, well, other structures, and utility lines.
- Consider future additions, such as screen rooms, porches, and awnings.
- Site the home away from natural water paths.

3-5 CLEAR AND GRADE THE SITE

Trim overhanging foliage considering future growth, potential storms, swaying in wind and snow/ice-weighted branches. Remove organic material such as vegetation, wood, roots, twigs, dead branches, grass, and brush from directly under the home. Remove any debris that could become termite infested from the site

and surrounding area. Remove all other debris from the home location, including roots from beneath footing locations. Properly dispose of all items.

It is recommended that a 2-inch grade be provided from the longitudinal centerline of the home to the edge of the home. The grade beneath the home must not allow for the collection of water. Further, maintain a minimum slope of 1/2 inch per foot away from the edge of the home for the first 10 feet in any direction (see Figures 3-1 and 3-2). Where property lines, walls, slopes, or other physical conditions prohibit this slope, provide the site with drains, swales, or grading to drain water away from the structure. Direct storm drainage runoff away from the site using ditches, culverts, and berms meeting the requirements of the LAHJ. If the home will have skirting, start grading from two feet in from the edge of the home.

Grade the ground so that water under porches, decks, and recessed entries flows away from the home. If proper grading is not possible, use other methods such as a drain tile and automatic sump pump system to remove any water that may collect under the home.

CAUTION: Moisture under the home can result in structural damage to the floor system and other parts of the home. Failure to provide adequate slope/drainage can result in moisture-related problems such as mold, mildew, and erosion.

The home is suitable for the installation of gutters and downspouts. Gutters and downspouts should be installed to direct runoff away from the home.

3-6 DETERMINE SOIL CONDITIONS

Examine the soil type in the area of the proposed home location to make sure it is suitable for placement of a home. The design of the home's support system, including footing/pier spacing and size, will in part be determined by the bearing capacity of the soil, as will the ground anchors used.
The soil under every portion of the support system must meet the following criteria:

- The soil must be firm and undisturbed (not previously excavated) or fill compacted to at least 95% of its maximum relative density. Uncompacted fill will settle over time, causing the home to shift and become misaligned with its supporting system.
- Fill must not contain large debris. This too will settle over time.
- The soil must not be comprised of organic clays or peat. Organic material can decay, causing settlement, and also may harbor pests that can infest the home.
- The water table must be below the lowest level of the planned support system/foundation. A soil's bearing capacity can be greatly reduced when it is saturated with water. Note that water tables may vary with seasonal or climactic conditions. Consult a geologist or the LAHJ if unsure of the water table level.
- The soil must not be a highly expansive type. Expansive soils can expand when they become saturated with water, causing the home to shift and become misaligned. If soils are expansive, contact a registered professional engineer or registered architect to assist with the design of the foundation system.

3-7 DETERMINE SOIL-BEARING CAPACITY AND FROST LINE

The soil under a home must be capable of withstanding the loads imposed by the weight of the home, its support system and furnishings, as well as any loads imposed by wind, snow, or other climactic conditions.

SOIL-BEARING CAPACITY

Determine the soil-bearing capacity in pounds per square foot (psf) before designing a support system. The higher the capacity (psf), the more weight the soil can hold without unduly compressing. As the soil-bearing capacity increases, footings can be reduced in size or spaced farther apart.

WARNING! Inadequate soil bearing capacity or a support system mismatched to the soil characteristics can result in excessive or differential settlement of the home, which can cause the home to be misaligned on its supporting system, resulting in structural strain as discussed in the introduction to this instruction.
Use one or more of the following methods to determine the site's soil bearing capacity:

- Test the soil. Hire a registered geologist, registered professional engineer, or registered architect to determine the soil classification and maximum allowable soil bearing capacity by testing the soil in accordance with generally accepted engineering practice.

- Obtain soil records. The local office of the U.S. Department of Agriculture's Natural Resources Conservation Service (**www.soils.usda.gov**) and/or the LAHJ may have test results and/or soil analyses on file for the area.
- Conduct a pocket penetrometer test. Use a pocket penetrometer to estimate allowable soil-bearing capacity as follows:

    1. Clear an area of a minimum of one square foot at least four inches deep or to the depth of the bottom of the planned footing.
    2. Select a location that will be under a footing.
    3. Using the instructions provided with the pocket penetrometer, take at least five readings.
    4. Discard the high and low readings and average the remaining readings. Round this result down to the nearest soil-bearing value shown in the right column of Table No. 3-1.
    5. Confirm that the rounded result matches the soil description in Table 3-1.

- Determine soil-bearing value by visual examination. If one of the options above is not available, the values in Table 3-1 can be used to establish soil-bearing capacity by visual examination. This method provides lower capacity values than the options above. Accurate soil identification typically requires special training or expertise. An engineer or building code official may be able to assist in classifying the soil found on the site.
- Use default capacity. Use an allowable pressure of 1,500 psf, unless site-specific information requires the use of lower values based on soil classification and type according to Table 3-1

NOTE: Soil types may vary across a home site. In this case, the soil with the lowest bearing capacity should be assumed when designing the support system. Keep a record of the soil-bearing capacity value; it will be used later to design the home's support system.

FROST LINE

In climates subject to ground freezing and when the frost line is not available from the LAHJ contact a registered engineer, or registered architect to determine the depth of the frost line. Figure 3-3 may be used as a guideline when there is no specific local determination. Keep a record of the frost depth; it will be used later to design the home's support system.

WARNING! Support systems on soils with bearing capacities less than 1,000 psf must be designed by a registered professional engineer or registered architect.

WARNING! Limitations of pocket penetrometers. Pocket penetrometers do not work on sand or gravel. Use Table 3-1 to determine allowable pressure for these types of soils. If a layer of gravel is encountered, test the soil under the gravel. Do not put the penetrometer on stones larger than its tip as this will provide an inaccurate reading.

3-8 DETERMINE GROUND ANCHOR HOLDING CAPACITY

When using auger-type ground anchors to tie the home down, first, use a torque probe to determine the anchor-holding strength of the soil on the site. Employ a torque probe with a shaft of sufficient length to test the soil at the depth of the anchor helical plate. Augur the probe into the ground, and following the probe manufacturer's instructions, take the torque wrench reading in the area where the anchors will be installed and at the depth of the anchor helix. If the soil varies in consistency across the site, then use the lowest reading. Based on this reading, consult the anchor manufacturer's charts to select the anchor type(s).

3-9 GROUND MOISTURE CONTROL

When the space beneath the home is enclosed with skirting or other materials, a minimum 6 mil thick polyethylene sheeting vapor retarder must be installed to cover the ground under the home, unless the home is installed in an arid region with dry soil.

The entire area beneath the home must be covered with the vapor retarder except for areas under open porches, decks, and recessed entries. The vapor retarder may be placed directly beneath the partings, or otherwise installed around or over footings placed at grade, and around anchors or other obstructions. Joints in the vapor retarder must be overlapped at least 12 inches. The lap should be oriented so that the sheet with the higher elevation overlaps the sheet with the lower elevation to promote the runoff of water from any source.

Tears and voids in the vapor retarder must be repaired using a 2 inch (min.) wide contractors sheathing tape suitable for use with polyethylene sheeting. The tape must be installed on a surface that is dry and free from oil and other contamination and within its manufacturer's temperature limitations. To repair a tear, cut a piece of tape approximately 4 inches longer than a tear, center it over the tear with an approximate 2 inch extension on each end and press it firmly in place on the vapor retarder. Depending on the length and nature of the tear multiple overlapping layers may be needed. To repair a void, cut a piece of polyethylene sheeting large enough to extend at least 12 inches beyond the edges of the void and tape it in place along its edges as though it was a tear.

NOTE: If the home site is not accessible, not appropriate for the planed support system, or cannot be properly graded, notify the purchaser, the retailer, and HUD, with the reasons why the site is unsuitable. Do not install the home until a; issues are remedied.

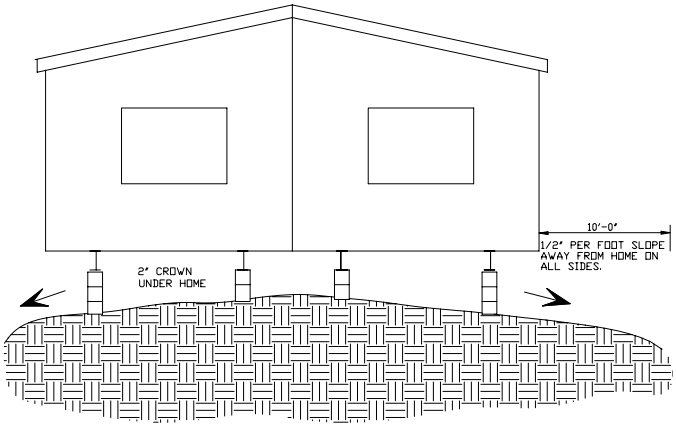

SITE GRADE
FIGURE 3-1

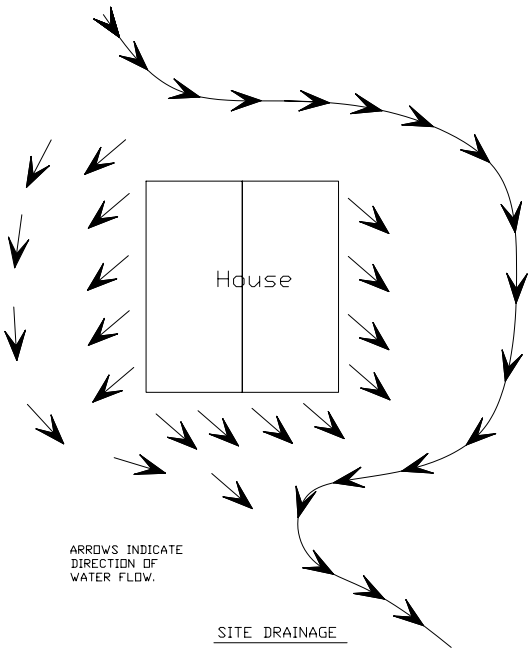

SITE DRAINAGE
FIGURE 3-2

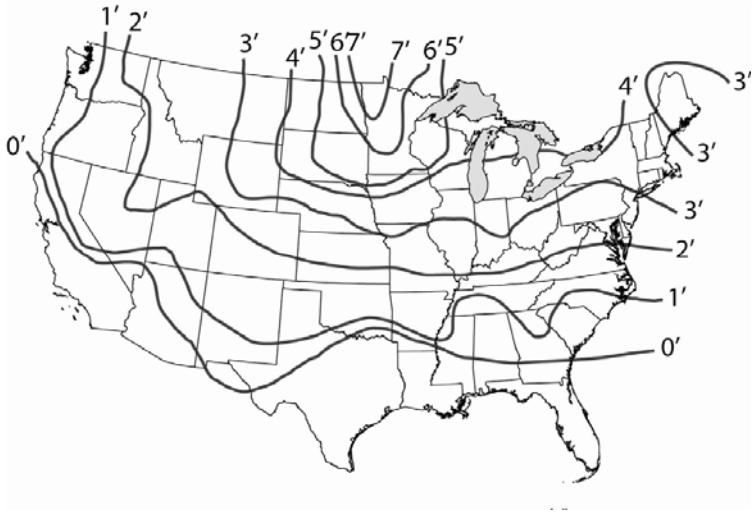

AVERAGE FROST PENETRATION MAP
FIGURE 3-3

SOIL CLASSIFICATION		SOIL DESCRIPTION	ALOWABLE SOIL BEARING PRESSURE (PSF)[1]	BLOWN COUNT ASTM D 1586-99	TROQUE PROBE[3] VALUE[4] (INCH-POUNDS)
CLASSIFICATION NUMBER	ASTM D 2487-00 OR D 2488-00				
1.		ROCK OR HARD PAN.	4000+		
2.	GW, GP, SW, SP, GM, SM	SANDY GRAVEL AND GRAVEL; VERY DENSE AND/OR CEMENTED SANDS; COURSE GRAVEL/COBBLES; PRELOADED SILTS, CLAYS AND CORAL.	2000	40+	MORE THAN 550
3.	GC, SC, ML, CL	SAND; SILTY SAND; CLAYEY SAND; SILTY GRAVEL; MEDIUM DENSE COURSE SANDS;. SANDY GRAVEL; AND VERY STIFF SILT, SAND CLAYS	1500	24-39	351-550
4A.	CD, MH[2]	LOOSE TO MEDIUM DENSE SANDS; FIRM TO STIFF CLAYS AND SILTS; ALLUVIAL FILLS.	1000	18-23	276-350
4B.	CH, MH[2]	LOOSE SANDS; FIRM CLAYS; ALLUVIAL FILLS	1000	12-17	175-275
5	OL, OH, PT	UNCOMPACTED FILL; PEAT; ORGANIC CLAY	REFER TO 3285.202(e)	0-11	LESS THAN 175

NOTES
1. THE VALUES PROVIDED IN THIS TABLE HAVE NOT BEEN ADJUSTED FOR OVERBURDEN PRESSURE, EMBEDMENT DEPTH, WATER TABLE HEIGHT, OR SETTLEMENT PROBLEMS
2. FOR SOILS CLASSIFIED AS CH OR MH, WITHOUT EITHER TORQUE PROBE VALUES OR BLOW COUNT TEST RESULTS, SLECTED ANCHORS MUST BE RATED A 4B SOIL.
3. THE TORQUE TEST PROBE IS A DEVICE FOR MEASURING THE TORQUE VALUES OF THE SOILS TO ASSIST IN EVALUATING THE HOLDING CAPACITY OF THE SOIL IN WHICH THE GROUND ANCHOR IS PLACED. THE SHAFT MUST BE OF SUITABLE LENGTH FOR THE FULL DEPTH OF THE GROND ANCHOR.
4. THE TORQUE VALUE IS A MEASURE OF THE LOAD RESISTANCE PROVIDED BY THE SOIL WHEN SUBJECT TO THE TURNING AND TWISTING FORCE OF THE PROBE.

SOIL BEARING CAPACITY

TABLE 3-1

Foundation System

4-1 CLIMATIC CONDITIONS

Climatic conditions must also be taken into consideration when installing the foundation. The bottom of the footing on which the pier is to be placed must be located at or below the local frost line or the foundation must be frost protected. If elected to locate the footings above the frost line and the foundation is not properly frost protected, the foundation will be susceptible to the heaving and the resultant settling action caused by frost. The symptoms of heaving are the same as for settling and can cause damage to the home. Consult with the LAHJ to determine the maximum depth of the local frost line prior to installing the footings.

4-2 CRAWLSPACE VENTILATION

It is very important that the area beneath the home be enclosed with a foundation wall or skirting to conserve energy and provide added comfort; this crawlspace must be ventilated (see section 3-9 for information on required vapor retarder). The minimum ventilation area must be 1 square foot of net free area (area of the openings in grillwork) for every 1,500 square feet of area under the home. The Length of home multiplied by width of home divided by 1,500 equals the net free area of vent required in square feet.

Ventilation openings must be located as high as practicable above the ground must be located on at least two opposite sides of the space to provide cross-ventilation, and one ventilator must be placed within 3 feet of each corner of the home with the remainder equally spaced along the length of the home and located across from one another. Ventilation openings must be covered for their full height and width with a perforated corrosion and weather resistant covering that is designed to prevent the entry of rodents. In areas subject to freezing, the ventilation openings must be of the adjustable type, allowing them to be in the open or closed position, depending on the climatic conditions.

4-3 CRAWLSPACE ACCESS

An access opening(s) must be provided to the crawl space area so that utility connections beneath the home are easily reached. The access openings must be not less than 18 inches in width and 24 inches in height and not less than 3 square feet in area.

NOTE: the actual installed size of the access should be based on the material and equipment which must pass through the opening.

4-4 FOOTING PLAN

Determine whether only I-beam support or a combination of I-beam and perimeter support will be used. Remember that the marriage line of sectional homes requires support at point load (column) locations and along the floor in between where the design roof load exceeds 30 psf. Using perimeter support reduces the load on the I-beam footings allowing the footings to be smaller. Footings must be located at all support locations. I-beam and perimeter support must be centered within 24 inches of each end of the floor and be centered no more than 96 inches apart in between unless otherwise indicated on a foundation plan produced by this company and then only in keeping with the restrictions listed on that plan. Footings and piers may be offset up to 6 inches in either direction along the supported members to allow for plumbing, electrical, mechanical equipment, or other devices in crawlspaces.

Create a sketch of the home that includes the exterior walls, large windows, doors, porches, the frame I-beams, the marriage line(s), if a multi-section home, and any known location of heavy interior features or furnishings of the home. Determine the point load and support point locations, mark these locations on the sketch noting the required footing size and loading. Also note the soil bearing capacity at the home site. This information will be used to size the footings when construction begins.

4-5 POINT LOAD SUPPORTS

For maximum safety and secure living all homes must be supported on a solid foundation, and therefore footings, are required under the frame, marriage line, exterior wall openings and other heavy point loads. Support points have been identified around the perimeter of the home and along the marriage line specifically for this home for door and window openings, marriage line column point loads, and marriage line floor loads as needed. The marking of support points may be tags, paint, or labels. Figures 4-1 through 4-6 illustrate typical support points.

4-6 DETERMINE POINT LOAD SUPPORT LOCATIONS

Point loads exist where a bearing or structural weight is concentrated and needs to be transferred to the supporting system or foundation at a specific point, generally along the perimeter of the floor and along the marriage line under load bearing walls. Load-bearing walls are those walls that support the ends of the roof trusses or rafters; typically sidewalls and marriage walls but not end walls of main units or sidewalls of tag units. Locate a support beneath each point load, including the following:

- Exterior doors on side walls at both sides of each door (blocking is not required at exterior doors on non-bearing end walls).
- Other exterior wall openings four feet and greater at both sides of each opening including multiple windows that total four feet wide or more without intermediate supports, even if individual windows are less than four feet (blocking is not required at exterior windows on non-bearing end walls).
- Marriage line openings four feet or greater at both sides of each opening (where marriage line openings are greater than 10 feet, intermediate supports must be placed at maximum 10 feet on center where the design roof load exceeds 30 psf).
- Marriage line columns.
- Load-bearing porch posts.
- Under waterbeds, large fish tanks, fireplaces, and fireplace stoves located outboard of the home's main I-beams.

Pier and footing supports may be omitted at door and window locations where listed adjustable outriggers or diagonal struts have been installed in keeping with the terms of their listings, rated capacities, and use restrictions.

4-7 DETERMINE POINT LOADS

Use Table 4-1 to determine the point loads at the marriage line column support locations. For each support, find the columns with the appropriate roof load zone and pier and footing loads. The column for pier and footing loads is divided into columns for home width. Find the rows corresponding to the span on he left and read across selecting the roof load and unit width to determine the load that needs to be supported at each location. Figure 4-1 and 4-2 illustrates typical support locations. If a support is shared by spans on both sides, add the respective loads together to arrive at the total load under that point.

4-8 FRAME SUPPORTS (homes without perimeter supports)

Except by specific design, all homes require regularly spaced supports along the main frame I-beams. The first support at either end of the home must be centered within 24 inches of the ends of the home. Intermediate spacings between the end supports may be located up to 8 feet on centers anywhere along the length of the I-beam.
Figures 4-3 and 4-5 illustrate typical frame support locations.

4-9 FRAME AND PERIMETER SUPPORTS (homes with perimeter supports)

Depending on the design and location, some homes require regularly spaced perimeter supports along the sidewalls in addition to frame and marriage line supports. This will be indicated on the data plate and/or documents included with the home. As a rule, any home installed in the north roof load zone, 40 psf and greater, will require perimeter support.

To minimize the number of perimeter supports, they may be evenly spaced between point load supports as shown in Figures 4-4 and 4-6 but not under spans. These illustrations identify typical support locations for homes utilizing perimeter supports.

4-10 DETERMINE FRAME SUPPORT LOADS

Determine whether the home will be supported along its I-beams alone or along both its I-beams and perimeter. Review the Pier and Pad Schedules found in Tables 4-2 through 4-9 to determine the required footing size. Find the table for the appropriate roof load zone and support arrangement (I-beam only or I-beam and perimeter), locate the home width column and the soil bearing capacity row. The column and row intersection will list the footing area and capacity.

4-11 SELECT FOOTING TYPE AND MATERIAL

Poured in place concrete, pre-cast concrete, ABS plastic, and a monolithic slab system are acceptable for use as footings to support the individual piers (all piers must be supported by footings) as limited below:

- Poured in place individual concrete footings must have a minimum thickness of 8 inches. The concrete for poured in place footings must have a minimum 28-day compressive strength of not less than 2500 psi.
- Pre-cast concrete footings (ASTM C 90-02a) must have a minimum thickness of 8 inches. The concrete for pre-cast concrete footings must have a minimum 28-day compressive strength of not less than 3000 psi.
- ABS plastic footings must be certified by a registered professional engineer or registered architect, be listed for the required load capacity of the installation, and be installed in accordance with their manufacturer's recommendations.
- Pre-cast concrete footings and ABS plastic footings must be laid on a solid, level bearing surface that provides for full contact between the bottom of the footing and the supporting soil (see Figure 4-7). Where footings must exceed their thickness to reach the frost line, poured in place footings must be used.
- The monolithic slab system, shown in Figure 4-8, requires the concrete to have a minimum 28-day compressive strength of not less than 3000 psi with a minimum slump of 4.
- Footings of materials other than those identified above are acceptable provided they are listed for such use and meet all other applicable requirements of the MHCSS and MMHIS.

NOTE: When using a monolithic slab the anchor bolts will need to be in position when the concrete is poured.

4-12 FOOTING INSTALLATION

Once the load on the footing and the soil-bearing capacity are known the size of each footing can be determined. I-beam and perimeter support footing size can be determined from Tables 4-3 through 4-9. Point load footing size can be determined from Table 4-10.

Footings must be sized to allow for the entire bearing surface of the concrete block pier. The minimum size footings for a single stack pier will be as follows: a square footing must be at least 16 inches by 16 inches (256 square inches) and a round footing must have a diameter of at least 18 inches (254 square inches). The minimum size footing for a double stack pier will be as follows: a square footing must be at least 16 inches by 16 inches (256 square inches) and a round footing must have a diameter of at least 24 inches (452 square inches).

The footings must be flat on the top surface to allow for the proper bearing of the single or double stack concrete block piers. Footings which have a rounded top surface or are too small in size to allow the entire block pier to bear on them, are unacceptable (see Figure 4-9). The maximum allowable slope on the top surface of the footings, in any direction, will be 1/8 of an inch per 12 inches of footing size (Figure 4-10). In all cases the bottom of the footings must extend to or below the maximum local frost line. The stability of the home is dependent on the quality of the footing/pier system and the properly installed ground anchors addressed later in this instruction.

Where the footing will be supporting a corner pier over 3 blocks high, it will need to be sized to handle a double stack pier.

NOTE: For the ease of pier construction, all of the footing tops should be at the same elevation.

CAUTION: If the bottom of the footings are not placed at or below the maximum local frost line and upward heaving occurs, the home can become misaligned and actually damaged by unseen forces. Damage caused by the improper installation and support of the home is not warranted by this company.

4-13 MONOLITHIC SLAB

The slab system is permitted to be installed above the frost line as follows:

- When all relevant site-specific conditions including soil characteristics, site preparation, ventilation, and the isolative properties of the under floor enclosure are considered.
- Anchorage requirements are accommodated.
- The monolithic slab is designed by a registered professional engineer or registered architect in accordance with acceptable engineering practice to prevent frost heave, or
- In accordance with SEI/ASCE 32-01.

Monolithic slabs placed on a layer of well-drained, undisturbed ground or fill material that is not susceptible to frost must have the thickness of such a layer included in meeting the design frost depth defined in Section 1-9. Undisturbed granular soils or fill material with less than 6% of mass passing a #200 (0.003 inches) mesh sieve in accordance with ASTM D 422 and other approved non-frost-susceptible materials must be considered non-frost-susceptible. Classification of frost susceptibility of soil must be determined by soils or geotechnical engineer, unless otherwise approved by the LAHJ (Section 4.2, SEI/ASCE 32-01).

4-14 INSULATED FOUNDATION

An insulated foundation is permitted above the frost line as follows:

- When all relevant site-specific conditions including soil characteristics, site preparation, ventilation, and the insulative properties of the under floor enclosure are considered,
- The foundation is designed by a registered professional engineer or registered architect in accordance with acceptable engineering practice to prevent frost heave, or
- In accordance with SEI/ASCE 32-01.

4-15 PIER CONFIGURATION

Manufactured piers or concrete blocks may be used to support the home on its foundation.

MANUFACTURED PIERS

Manufactured piers must be listed and labeled and installed to the pier manufacturer's installation instructions. They must be listed or labeled for their vertical load capacity and where required by design, for the appropriate horizontal load, and be provided with protection against weather deterioration and corrosion at least equivalent to that provided by a coating of zinc on steel not less that 0.30 oz. $ft.^2$ of surface coated. The height of the manufactured piers must be selected so that the adjustable risers do not extend more than 2 inches when finally positioned.

CONCRETE BLOCK PIERS

Concrete block piers must be constructed from load bearing (not decorative) 8 inch by 8 inch by 16 inch nominal size, open or closed cell, concrete blocks conforming to ASTM C 90. The blocks having hollow cells must be stacked with their hollow cells aligned vertically. The blocks of double stacked piers must be interlocked by laying each successive layer perpendicular to the previous layer (See Figure 4-11). Mortar is not required for concrete block piers unless otherwise specified in these installation instructions.

CAUTION: Dry stacked piers (joints not mortared) must not exceed their design capacity of 8,000 pounds for an 8 inch by 16 inch single stack block and 16,000 pounds for a 16 inch by 16 inch double stack block.

Structural loads must be evenly distributed across capped-hollow core block piers. Caps must be solid concrete or masonry at least 4 inches in nominal thickness, hardwood lumber at least 2 inches in nominal thickness, or be corrosion-protected 1/2 inch (min.) thick steel. All caps must be the same length and width as the piers on which they rest except 7 1/4 wide hardwood lumber, nominal 2 by 8, is allowable to cap a 7 1/2 inch wide masonry unit. When split caps (2 caps) are used on double-stacked blocks, the caps must be installed with the long dimension across the joint in the blocks below (See Figure 4-11).

Any gaps that occur during the installation between the bottom of the main chassis I-beam and the supporting pier must be filled. Hardwood plates no more than 2 inch nominal thickness or 2 inch or 4 inch nominal concrete block must be used to fill the gaps.

Shims, 4 inch by 6 inch by 1 inch nominal, must be used in pairs from opposite sides of the I-beam as shown in Figure 4-11 and must be driven tightly to occupy no more than 1 inch of vertical height completing the support of the home atop each pier.

4-16 PIER DESIGN

Piers must be designed to provide at least 18 inches of clear space between the underside of the chassis I-beams and the grade beneath the home. Pier design is controlled by the finished height of the pier and it's location beneath the home as follows:

- **FRAME PIERS LESS THAN 36 INCHES HIGH**

  Piers less than 36 inches in height from the top of the footing to the top of the pier cap may be of single stack construction. The piers under I-beams must be installed so that their long dimension is perpendicular to the supported I-beam. Piers over 3 blocks high located at corners must be constructed out of double, interlocked, concrete blocks. Horizontal offsets from the top to the bottom of the pier must not exceed 1/2 inch (See Figure 4-10).

- **FRAME PIERS OVER 36 INCHES TO 57 INCHES HIGH**

  Piers between 36 and 57 inches high must be constructed out of double, interlocked, concrete blocks. Horizontal offsets from the top to the bottom of the pier must not exceed 1/2 inch (See Figures. 4-10 and 4-11).

- **FRAME PIERS OVER 57 INCHES HIGH**

  Piers over 57 inches high must be designed by a registered professional engineer or registered architect. See paragraph 1-2. Further, the additional height will require that the anchoring system be redesigned by a registered professional engineer or registered architect.

- **PERIMETER SUPPORT PIERS**

  Piers required at marriage line column supports, marriage line floor support, along the perimeter, and at the edge of load bearing exterior wall openings, may be single stacked to a height of 54 inches or double stacked to a height of 67 inches form the top of the footing to the top of the pier cap. Piers used for perimeter support must be installed with the long dimension parallel to the perimeter rail of the floor system. Piers used to support column loads must be installed with the long dimension of the concrete block perpendicular to the perimeter rail beneath the column.

4-17 ALTERNATE SUPPORT

PERIMETER AND TRANSVERSE BEAM SUPPORT

Transverse I-beam spacing is limited to a maximum distance of 14 feet between beams, center to center, with an allowable exception of 16 feet on units up to 28 feet wide, as needed to avoid the installation of an additional transverse I-beam. Exception: For homes constructed to meet a 60 PSF roof load, the spacing must be limited to 12 feet center to center. The maximum spacing between transverse I-beams must be considered as the distance to the next transverse I-beam location or foundation wall on either side of the I-beam from which the measurement is being taken. Find the greater one of those two distances in the “Beam Spacing (ft.)” column in Table 4-11.

Where a transverse I-beam is to be located below a portion of the unit marriage wall the center line footing will be sized using the floor load + roof load column of the table, (i.e.; Floor + 30 PSF, Floor + 40 PSF, or Floor + 60 PSF), which corresponds with the roof live load of the unit in pounds per square foot (PSF). This roof live load can be found on the “Data Plate” (see Section 2-1). The number call out, “1”, “2”, or “3” from Table 4-11 must then be matched to the footing size in Table 4-13.

If the transverse I-beam is to be located below an area of the unit where there is no portion of the marriage wall directly above it, size the center line footing from the “Floor Load Only” column of Table 4-11. Again the maximum spacing between transverse I-beams should be considered as the distance to the next transverse I-beam location or foundation wall on either side of the I-beam from which the measurement is being taken.

A steel jack post and plate (manufactured adjustable pier) must be positioned beneath the center line of each transverse I-beam and be supported on a properly sized footing. The appropriate post and plate sizes are identified by letter call out, “a”, “b”, or “c”, in Table 4-11 where the proper footing size was found. Match the letter call out with the post and plate size in Table 4-12. Where the posts and plates are installed in an unconditioned space subject to moisture see Section 4-15.

A column supporting roof load is built into the ends of the marriage walls where the adjacent open spans are greater than 4 feet. If a transverse I-beam is not located at any of these points an additional steel jack post, plate, and footing must be properly sized and installed directly below each column support location. Exception: For homes constructed to meet a 60 PSF roof load, the ends of **all** marriage wall openings, regardless of width, must have a support. To properly size these measure the greater distance to the next footing that supports roof load and find that number in the “Beam Spacing (ft)” column of Table 4-11. Then

select the appropriate “30 PSF, 40 PSF, or 60 PSF Roof Only” column on the table. Find the footing size number and the post/plate size letter and match them to the sizes shown in Tables 4-12 and 4-13.

A minimum 8” thick load bearing perimeter foundation wall and footing must be installed around the entirety of the home with concrete pilasters that project inwardly to support and anchor the ends of the transverse I-beams. Concrete pilasters must also be installed below the ends of the longitudinal I-beams that are part of the steel frame on which the unit is built. Since the transverse beams support the frame I-beams the pilasters will be of different heights. Remember to allow for the thickness of any bearing plates used.

Refer to the Table 4-14 to size the transverse I-beams. In the event that the ends of the transverse I-beams are pocketed into the perimeter foundation wall, the length of each transverse I-beam must be extended by the additional recess of each pocket.

See the Foundation Details, pages A-9, for details on building and preparing this support and anchoring system. Page A-8 is model specific and is intended to assist the installer in interpretation of the installation manual during the installation process. The installation manual is the installing document, should there be a conflict between page A-8 and the manual, the certified manual controls.

PERIMETER WALL AND PIER SUPPORT

To properly size the footings that are below the longitudinal I-beams and marriage line you must establish the width of the home, identify the soil bearing capacity at the home site, and determine the roof load zone the home is being placed in by referring to the Data Plate (see Section 2-1).

Crawl space foundation piers and footings must be installed below each of the longitudinal I-beams under the home with the first being located within 38 inches of each end of the home floor with the remaining distance between these end footings and piers being divided equally in increments not greater than 14’-0”. See Table 4-15 for footing sizes below the I-beam support points.

A column, supporting roof load, is built into the end of each unit’s marriage wall where the adjacent open spans are greater than 4 feet. A footing and pier must be located directly below each column location. To properly size each of these footings and piers measure the open span area in the unit and refer to tables 4-18, 4-19, and 4-20, specific to the home’s roof load and floor width. Find the length of the span in feet, called “Beam Span”, and the appropriate soil bearing capacity for that site to identify the correct footing size.

Additional footings and piers will need to be located beneath the marriage wall not exceeding 8 feet on centers taking care not to place them beneath HVAC and water piping crossovers. See Tables 4-16 and 4-17 for footing sizes below the marriage line.

A minimum 8” thick load bearing perimeter foundation wall and footing must be installed around the entirety of the unit, as detailed on pages A-9 CRAWL.

See the Foundation Details, pages A-9 CRAWL, for details on building and preparing this support and anchoring system. Page A-8 is model specific and is intended to assist the installer in interpretation of the installation manual during the installation process. The installation manual is the installing document, should there be a conflict between page A-8 and the manual, the certified manual controls.

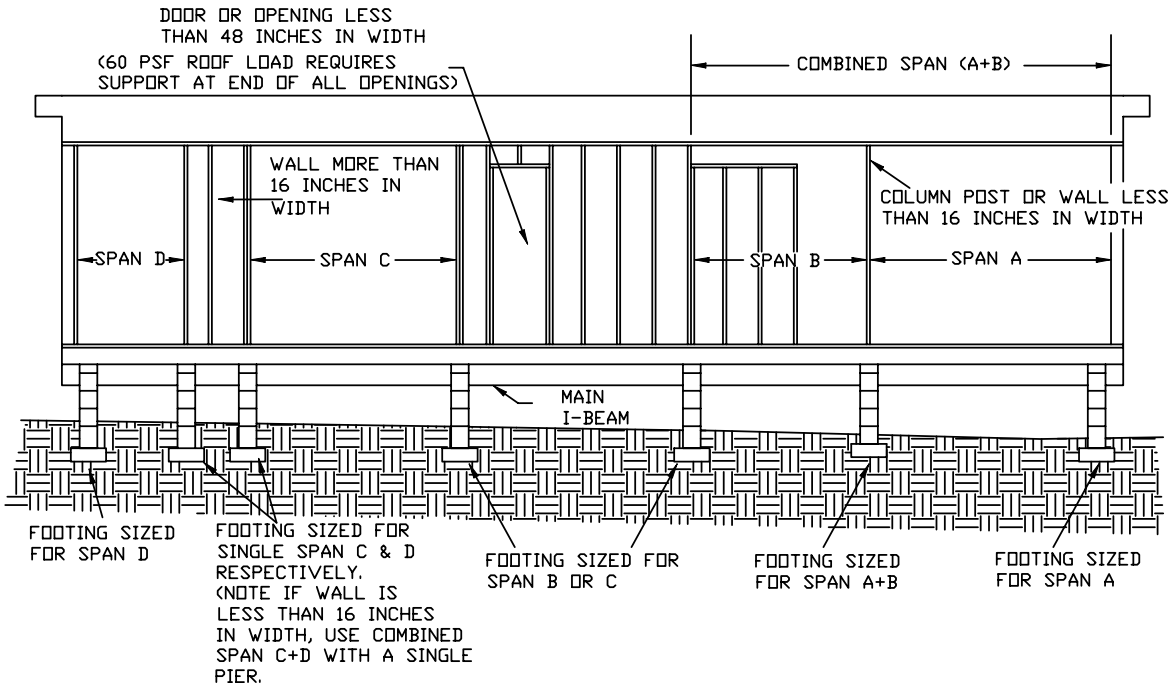

TYPICAL POINT LOAD SUPPORT PIERS

MARRIAGE LINE

FIGURE 4-1

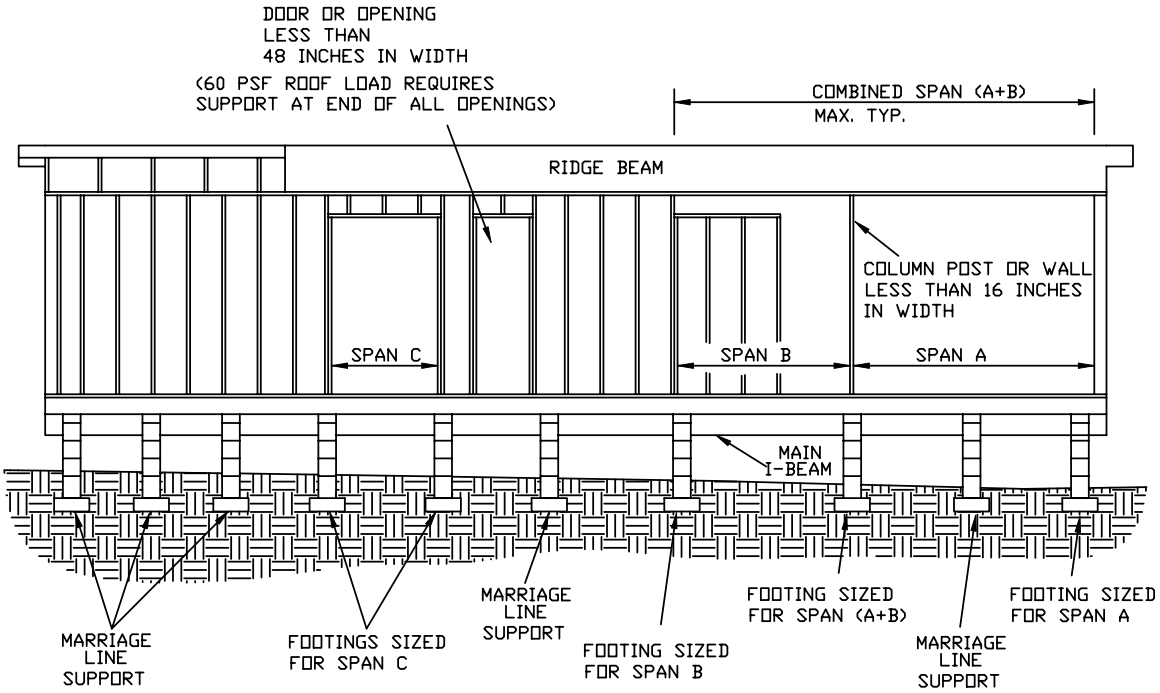

MARRIAGE LINE SUPPORT

PERIMETER SUPPORT REQUIRED

FIGURE 4-2

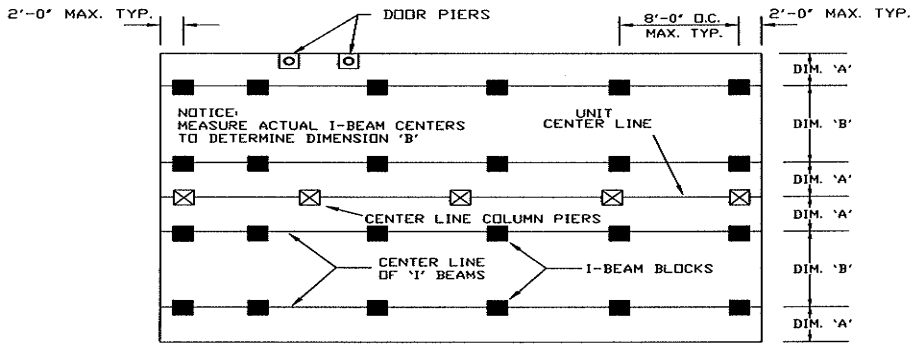

REFER TO TABLES
3-1, 4-2, 4-3, 4-5, 4-7,
FOR FOOTINGS, SOIL
TYPES AND DIMENSIONS

TYPICAL FRAME SUPPORT

FIGURE 4-3

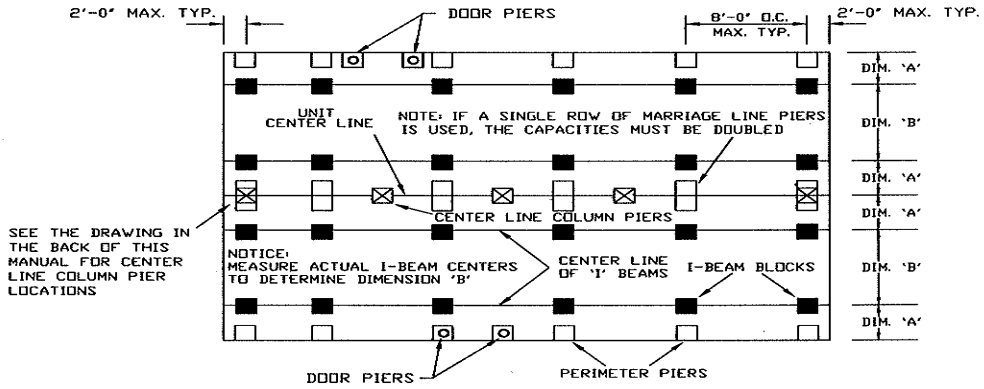

REFER TO TABLES
3-1, 4-2, 4-4, 4-6, 4-8,
& 4-9 FOR FOOTINGS, SOIL
TYPES AND DIMENSIONS

TYPICAL PERIMETER & FRAME SUPPORT

FIGURE 4-4

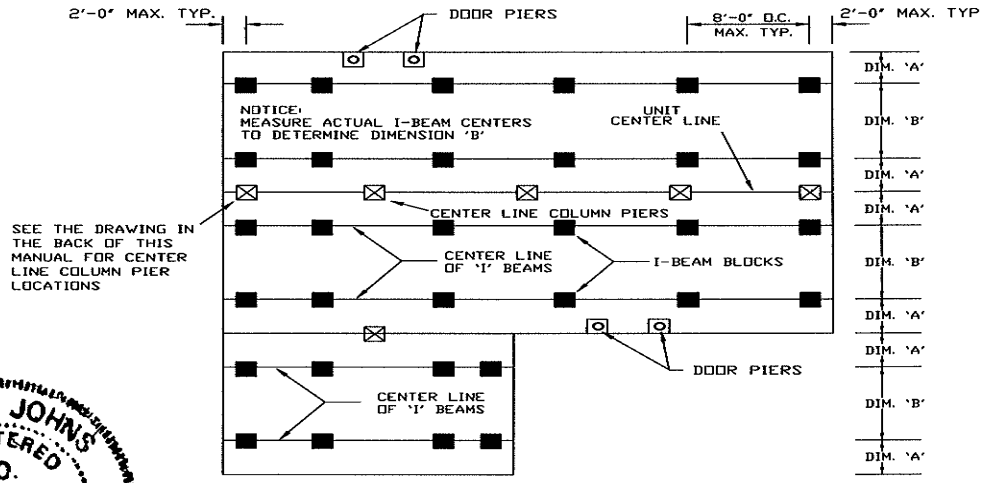

GENERAL NOTE: CENTERLINE SUPPORTS (⊠) MUST NOT BE PLACED DIRECTLY UNDERNEATH HVAC CROSSOVERS, WHICH GO THROUGH THE PERIMETER RAIL. THIS NOTE APPLIES TO FIGURES 4-3, 4-4, 4-5 & 4-6.

REFER TO TABLES
3-1, .4-2, 4-3, 4-5 & 4-7
FOR FOOTINGS, SOIL
TYPES AND DIMENSIONS

TYPICAL FRAME SUPPORT

FIGURE 4-5

EVOR F. JOHNS
REGISTERED
NO.
01656
STATE OF
PROFESSIONAL ENGINEER
12/17/08

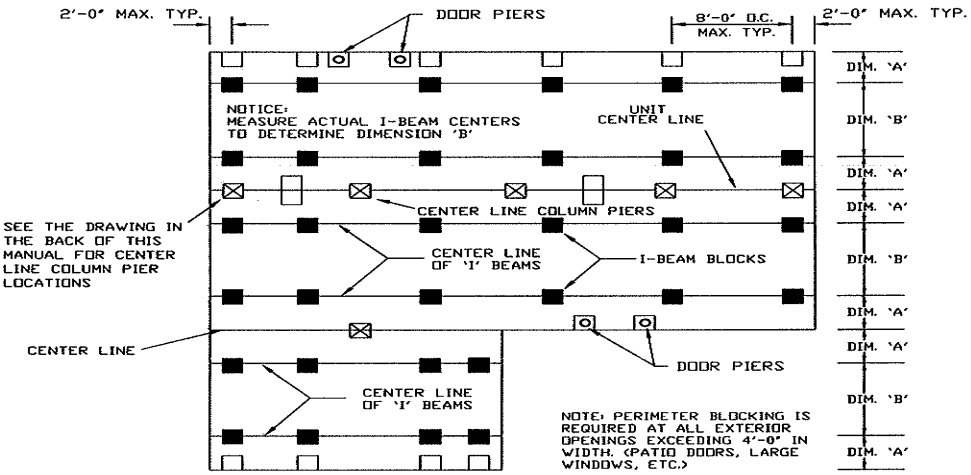

REFER TO CHARTS 3-1, 4-3, 4-5, 4-7, 4-9 & 4-10 FOR FOOTINGS, SOIL TYPES AND DIMENSIONS

TYPICAL PERIMETER AND FRAME BLOCKING

FIGURE 4-6

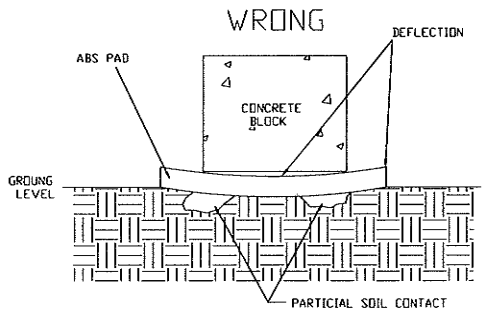

UNLEVEL, POORLY COMPACTED OR MISSING SOIL.

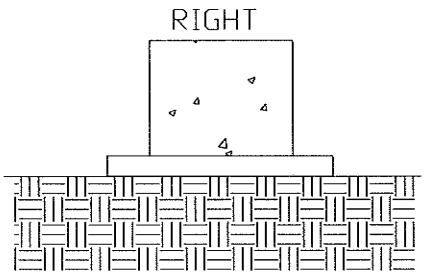

LEVEL WITH NO DEFLECTION

PRE-CAST CONCRETE AND ABS FOOTINGS

FIGURE 4-7

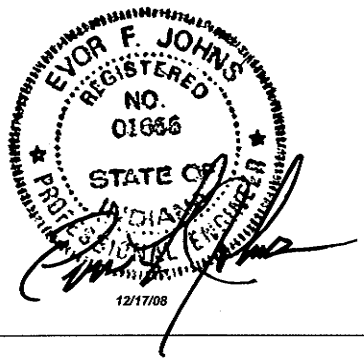

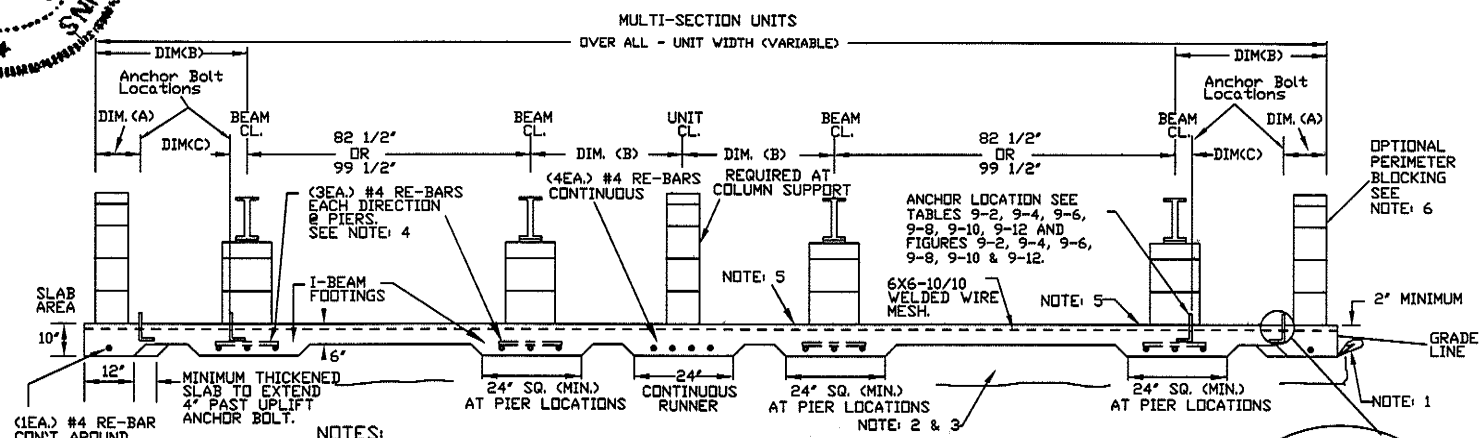

NOTES:

1 6 MIL. VISQUEEN VAPOR BARRIER IS REQUIRED UNDER CONCRETE.

2 ALL ORGANIC MATERIAL TO BE REMOVED FROM UNDER PAD.

3 FILL MUST BE COMPACTED TO 95% OF IT'S MAXIMUM RELATIVE DENSITY.

4 RE-BARS LOCATED 3" FROM BOTTOM AND SIDES OF CONCRETE.

5 CONCRETE TO BE 3000 P.S.I. MINIMUM WITH SLUMP OF 4.

6 IN LOCATIONS SUSCEPTIBLE TO FROST HEAVE, PERIODIC REALIGNMENT MAY BE REQUIRED.

7 BLOCKING AROUND THE PERIMETER IS REQUIRED AT ALL SIDEWALL OPENINGS EXCEEDING 48 INCHES IN WIDTH AND EXTERIOR DOORS. PERIMETER AND MARRIAGE LINE BLOCKING IS REQUIRED FOR THE NORTH ROOF LOAD ZONE(40PSF).

8 PAD MUST BE SLOPED FROM THE CENTERS OUTWARD EACH DIRECTION 1\8 INCH PER FOOT

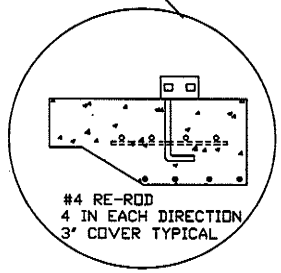

ANCHOR LOCATION SEE TABLES 9-1, 9-3, 9-5, 9-7, 9-9, 9-11, 9-13, 9-14 AND FIGURES 9-1, 9-3, 9-5, 9-7 9-9, 9-11, 9-13 & 9-14.

UNIT WIDTH MINIMAL	UNIT WIDTH ACTUAL *	DIMENSION "A"	DIMENSION "B" 82 1/2" I-BEAM	DIMENSION "B" 99 1/2" I-BEAM	DIMENSION "C"
24' WIDE	274"	12"	27 1/4"	18 3/4"	2"
28' WIDE	324"	12"	39 3/4"	31 1/4"	2"
28' WIDE	330"	12"	41 1/4"	32 3/4"	2"
32' WIDE	364"	12"	49 3/4"	41 14/4"	2"
32' WIDE	368"	12"	50 3/4"	42 1/4"	2"

NOTES: 1. DOES NOT INCLUDE ANY EXTERIOR SHEATHING, SIDING , EAVE OVERHANG OR MATING LINE TOLERANCE OF UP TO PLUS 5\8 OF AN INCH DUE TO SITE INSTALLED WEATHER SEALS.

* NOT INCLUDING SIDING AND/OR SHEATHING ON EXTERIOR WALLS.

MONOLITHIC SLAB SYSTEM

FIGURE 4-8

EVOR F. JOHNS REGISTERED NO. 01666 STATE OF ALABAMA PROFESSIONAL ENGINEER
12/17/08

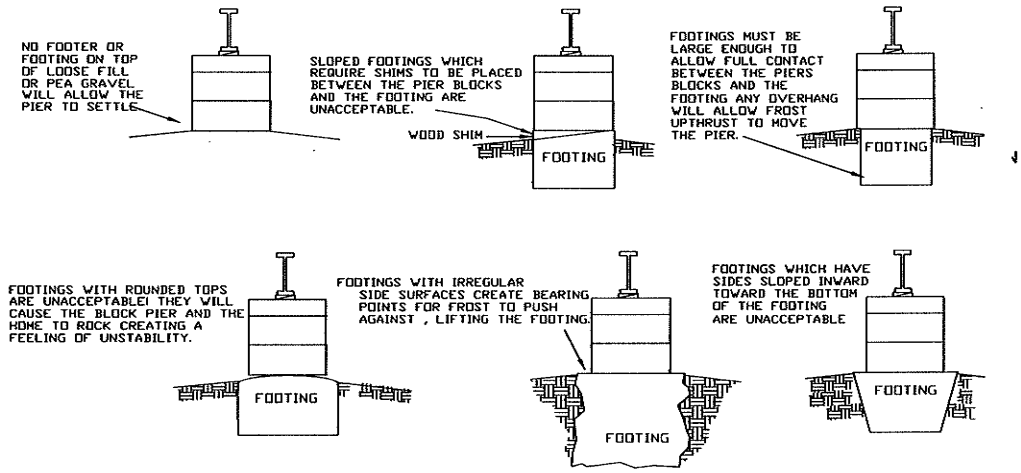

IMPROPER FOOTING DETAILS

FIGURE 4-9

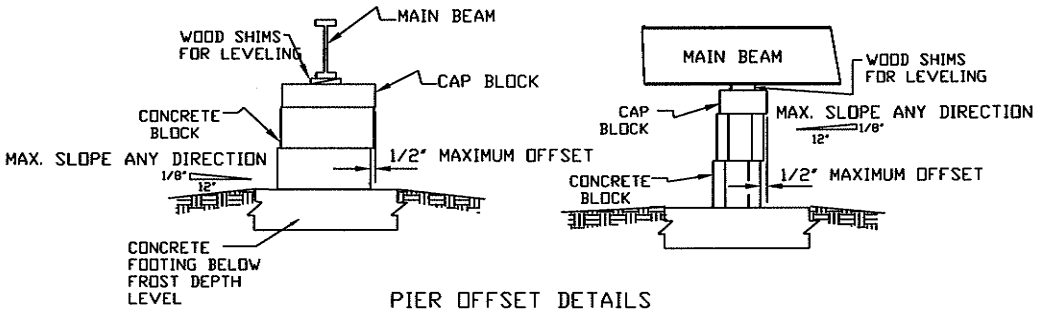

PIER OFFSET DETAILS

FIGURE 4-10

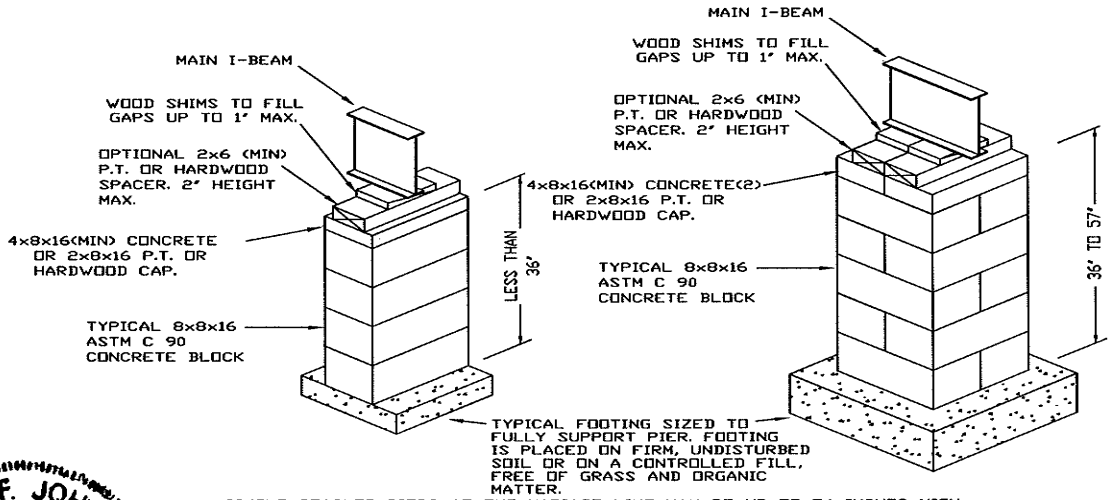

- * SINGLE STACKED PIERS AT THE MARIAGE LINE MAY BE UP TO 54 INCHES HIGH.
- * DOUBLED STACKED PIERS AT THE MARRIAGE LINE MAY BE UP TO 67 INCHES HIGH
- * I-BEAM PIER HEIGHTS GREATER THAN 57 INCHES IN HEIGHT WILL REQUIRE THAT THE ANCHOR SYSTEM BE RE-EVALUATED BY A REGISTERED PROFESSIONAL ENGINEER OR REGISTERED ARCHITECT, AND APPROVED BY MANUFACTURER AND ITS DAPIA.
- * PIER GREATER THAN 67" IN HEIGHT MUST BE DESIGNED BY A REGISTERED PROFESSIONAL ENGINEER OR REGISTERED ARCHITECT,AND APPROVED BY MANUFACTURER AND ITS DAPIA.
- * 18 INCH MINIMUM PIER HEIGHT FOR THE PROPER INSTALLATION OF EXTERIOR HVAC DUCTS ACCESS FOR SERVICING THE HOME, GROUND CLEARANCE.

TYPICAL FOUNDATION PIERS

FIGURE 4-11

EVOR F. JOHNS REGISTERED NO. 01666 STATE OF FLORIDA PROFESSIONAL ENGINEER

12/17/08

RIDGE BEAM SPAN COLUMN POINT LOAD PIER & FOOTING CAPACITY				
MARRIAGE LINE OPENING (FEET)	ROOF LIVE LOAD (PSF)	PIER LOADS (LBS)		
		24'-WIDE	28'-WIDE	32'-WIDE
5'-0"	20	1000	1500	1500
	30	1500	1500	2000
	40	1500	2000	2000
	60	2000	2500	3000
9'-0"	20	2000	2000	2500
	30	2500	2500	3000
	40	3000	3500	3500
	60	4000	4500	5000
13'-0"	20	2500	3000	3500
	30	3000	4000	4500
	40	4000	4500	5500
	60	5500	6500	7500
17'-0"	20	3000	3500	4000
	30	4000	5000	5500
	40	5000	6000	7000
	60	7000	8500	9500
21'-0"	20	4000	4500	5000
	30	5000	6000	6500
	40	6000	7500	8500
	60	8500	10500	11500
25'-0"	20	4500	5500	6000
	30	6000	7000	8000
	40	7500	9000	10000
	60	10000	12500	14000

RIDGE BEAM SPAN

(COLUMN POINT LOAD PIER & FOOTING CAPACITY)

TABLE 4-1

NOMINAL WIDTH	UNIT WIDTH	82 1/2" I-BEAM CENTERS		UNIT WIDTH	99 1/2" I-BEAM CENTERS	
		DIM "A"	DIM "B"		DIM "A"	DIM "B"
24' WIDE	274"	27 1/4"	82 1/2"	274"	18 3/4"	99 1/2"
26' WIDE	316"	37 3/4"	82 1/2"	282"	29 1/4"	99 1/2"
28' WIDE	324"	39 3/4"	82 1/2"	312"	31 1/4"	99 1/2"
28' WIDE	330"	41 1/4"	82 1/2"	324"	32 3/4"	99 1/2"
32' WIDE	364"	49 3/4"	82 1/2"	334"	41 14/4"	99 1/2"
32' WIDE	368"	50 3/4"	82 1/2"	368"	42 1/4"	99 1/2"

NOTE-1: MEASURE ACTUAL I-BEAM CENTERS TO DETERMINE DIMENSION 'B'

TYPICAL UNIT I-BEAM LOCATIONS

TABLE 4-2

EVOR F. JOHNS
REGISTERED
NO.
01666
STATE OF
INDIANA
PROFESSIONAL ENGINEER
12/17/08

TABLE 4-3

PIER & PAD SCHEDULE — DOUBLE WIDE 20 POUND LIVE LOAD WITH NO PERIMETER BLOCKING

SOIL CAP.	LEGEND	PIER LOC.	23 FEET WIDE 8'-0" O.C.		24 FEET WIDE 8'-0" O.C.		26 FEET WIDE 8'-0" O.C.		27/28 FEET WIDE 8'-0" O.C.		32 FEET WIDE 8'-0" O.C.	
			REQ'D. PIER CAPACITY (LBS.)	REQ'D. FOOTING (SQ. IN.)	REQ'D. PIER CAPACITY (LBS.)	REQ'D. FOOTING (SQ. IN.)	REQ'D. PIER CAPACITY (LBS.)	REQ'D. FOOTING (SQ. IN.)	REQ'D. PIER CAPACITY (LBS.)	REQ'D. FOOTING (SQ. IN.)	REQ'D. PIER CAPACITY (LBS.)	REQ'D. FOOTING (SQ. IN.)
1000	■	FRAME	4240	702	4400	729	4800	795	5040	835	5627	932
1500	■	FRAME	4240	448	4400	465	4800	507	5040	532	5627	594
2000	■	FRAME	4240	328	4400	341	4800	372	5040	390	5627	436
2500	■	FRAME	4240	259	4400	269	4800	293	5040	308	5627	344
3000	■	FRAME	4240	214	4400	222	4800	242	5040	254	5627	284

TABLE 4-4

PIER & PAD SCHEDULE — DOUBLEWIDE 20 POUND LIVE LOAD WITH PERIMETER BLOCKING

SOIL CAP.	LEGEND	PIER LOC.	23 FEET WIDE 8'-0" O.C.		24 FEET WIDE 8'-0" O.C.		26 FEET WIDE 8'-0" O.C.		27/28 FEET WIDE 8'-0" O.C.		32 FEET WIDE 8'-0" O.C.	
			REQ'D. PIER CAPACITY (LBS.)	REQ'D. FOOTING (SQ. IN.)	REQ'D. PIER CAPACITY (LBS.)	REQ'D. FOOTING (SQ. IN.)	REQ'D. PIER CAPACITY (LBS.)	REQ'D. FOOTING (SQ. IN.)	REQ'D. PIER CAPACITY (LBS.)	REQ'D. FOOTING (SQ. IN.)	REQ'D. PIER CAPACITY (LBS.)	REQ'D. FOOTING (SQ. IN.)
1000	■	FRAME	1813	300	1863	308	1988	329	2063	342	2388	395
	□	PERIMETER	2028	336	2138	354	2413	400	2578	427	2839	470
1500	■	FRAME	1813	191	1863	197	1988	210	2063	218	2388	252
	□	PERIMETER	2028	214	2138	226	2413	255	2578	272	2839	300
2000	■	FRAME	1813	140	1863	144	1988	154	2063	160	2388	185
	□	PERIMETER	2028	157	2138	165	2413	187	2578	199	2839	220
2500	■	FRAME	1813	111	1863	114	1988	121	2063	126	2388	146
	□	PERIMETER	2028	124	2138	131	2413	147	2578	157	2839	173
3000	■	FRAME	1813	91	1863	94	1988	100	2063	104	2388	120
	□	PERIMETER	2028	102	2138	108	2413	122	2578	130	2839	143

TABLE 4-5

PIER & PAD SCHEDULE — DOUBLEWIDE 30 POUND LIVE LOAD WITH NO PERIMETER BLOCKING

SOIL CAP.	LEGEND	PIER LOC.	23 FEET WIDE 8'-0" O.C.		24 FEET WIDE 8'-0" O.C.		26 FEET WIDE 8'-0" O.C.		27/28 FEET WIDE 8'-0" O.C.		32 FEET WIDE 8'-0" O.C.	
			REQ'D. PIER CAPACITY (LBS.)	REQ'D. FOOTING (SQ. IN.)	REQ'D. PIER CAPACITY (LBS.)	REQ'D. FOOTING (SQ. IN.)	REQ'D. PIER CAPACITY (LBS.)	REQ'D. FOOTING (SQ. IN.)	REQ'D. PIER CAPACITY (LBS.)	REQ'D. FOOTING (SQ. IN.)	REQ'D. PIER CAPACITY (LBS.)	REQ'D. FOOTING (SQ. IN.)
1000	■	FRAME	4770	790	4950	820	5400	894	5670	939	6330	1048
1500	■	FRAME	4770	504	4950	523	5400	570	5670	599	6330	668
2000	■	FRAME	4770	369	4950	383	5400	418	5670	439	6330	490
2500	■	FRAME	4770	291	4950	302	5400	330	5670	346	6330	386
3000	■	FRAME	4770	240	4950	249	5400	272	5670	286	6330	319

EVOR F. JOHNS
REGISTERED
NO. 01666
STATE OF OHIO
PROFESSIONAL ENGINEER
12/17/08

TABLE 4-6

PIER & PAD SCHEDULE DOUBLEWIDE 30 POUND LIVE LOAD WITH PERIMETER BLOCKING

SOIL CAP.	LEGEND	PIER LOC.	23 FEET WIDE 8'-0" O.C.		24 FEET WIDE 8'-0" O.C.		26 FEET WIDE 8'-0" O.C.		27/28 FEET WIDE 8'-0" O.C.		32 FEET WIDE 8'-0" O.C.	
			REQ'D. PIER CAPACITY (LBS.)	REQ'D. FOOTING (SQ. IN.)	REQ'D. PIER CAPACITY (LBS.)	REQ'D. FOOTING (SQ. IN.)	REQ'D. PIER CAPACITY (LBS.)	REQ'D. FOOTING (SQ. IN.)	REQ'D. PIER CAPACITY (LBS.)	REQ'D. FOOTING (SQ. IN.)	REQ'D. PIER CAPACITY (LBS.)	REQ'D. FOOTING (SQ. IN.)
1000	■	FRAME	1813	300	1863	308	1988	329	2063	342	2388	395
	□	PERIMETER	2558	424	2688	445	3013	499	3208	531	3543	587
1500	■	FRAME	1813	191	1863	197	1988	210	2063	218	2388	252
	□	PERIMETER	2558	270	2688	284	3013	318	3208	339	3543	374
2000	■	FRAME	1813	140	1863	144	1988	154	2063	160	2388	185
	□	PERIMETER	2558	198	2688	208	3013	233	3208	248	3543	274
2500	■	FRAME	1813	111	1863	114	1988	121	2063	126	2388	146
	□	PERIMETER	2558	156	2688	164	3013	184	3208	196	3543	216
3000	■	FRAME	1813	91	1863	94	1988	100	2063	104	2388	120
	□	PERIMETER	2558	129	2688	135	3013	152	3208	162	3543	179

TABLE 4-7

PIER & PAD SCHEDULE DOUBLEWIDE 40 POUND LIVE LOAD WITH NO PERIMETER BLOCKING

SOIL CAP.	LEGEND	PIER LOC.	23 FEET WIDE 8'-0" O.C.		24 FEET WIDE 8'-0" O.C.		26 FEET WIDE 8'-0" O.C.		27/28 FEET WIDE 8'-0" O.C.		32 FEET WIDE 8'-0" O.C.	
			REQ'D. PIER CAPACITY (LBS.)	REQ'D. FOOTING (SQ. IN.)	REQ'D. PIER CAPACITY (LBS.)	REQ'D. FOOTING (SQ. IN.)	REQ'D. PIER CAPACITY (LBS.)	REQ'D. FOOTING (SQ. IN.)	REQ'D. PIER CAPACITY (LBS.)	REQ'D. FOOTING (SQ. IN.)	REQ'D. PIER CAPACITY (LBS.)	REQ'D. FOOTING (SQ. IN.)
1000	■	FRAME	5300	878	5500	911	6000	994	6300	1043	7033	1165
1500	■	FRAME	5300	560	5500	581	6000	634	6300	665	7033	743
2000	■	FRAME	5300	410	5500	426	6000	464	6300	488	7033	544
2500	■	FRAME	5300	324	5500	336	6000	366	6300	385	7033	429
3000	■	FRAME	5300	267	5500	277	6000	302	6300	318	7033	354

TABLE 4-8

PIER & PAD SCHEDULE DOUBLEWIDE 40 POUND LIVE LOAD WITH PERIMETER BLOCKING

SOIL CAP.	LEGEND	PIER LOC.	23 FEET WIDE 8'-0" O.C.		24 FEET WIDE 8'-0" O.C.		26 FEET WIDE 8'-0" O.C.		27/28 FEET WIDE 8'-0" O.C.		32 FEET WIDE 8'-0" O.C.	
			REQ'D. PIER CAPACITY (LBS.)	REQ'D. FOOTING (SQ. IN.)	REQ'D. PIER CAPACITY (LBS.)	REQ'D. FOOTING (SQ. IN.)	REQ'D. PIER CAPACITY (LBS.)	REQ'D. FOOTING (SQ. IN.)	REQ'D. PIER CAPACITY (LBS.)	REQ'D. FOOTING (SQ. IN.)	REQ'D. PIER CAPACITY (LBS.)	REQ'D. FOOTING (SQ. IN.)
1000	■	FRAME	1813	300	1863	308	1988	329	2063	342	2388	395
	□	PERIMETER	3088	511	3238	536	3613	598	3838	635	4246	703
1500	■	FRAME	1813	191	1863	197	1988	210	2063	218	2388	252
	□	PERIMETER	3088	326	3238	342	3613	381	3838	405	4246	448
2000	■	FRAME	1813	140	1863	144	1988	154	2063	160	2388	185
	□	PERIMETER	3088	239	3238	251	3613	280	3838	297	4246	329
2500	■	FRAME	1813	111	1863	114	1988	121	2063	126	2388	146
	□	PERIMETER	3088	189	3238	198	3613	221	3838	234	4246	259
3000	■	FRAME	1813	91	1863	94	1988	100	2063	104	2388	120
	□	PERIMETER	3088	156	3238	163	3613	182	3838	193	4246	214

EVOR F. JOHNS
REGISTERED
NO.
01655
STATE OF
INDIANA
PROFESSIONAL ENGINEER
12/17/08

TABLE 4-9

PIER & PAD SCHEDULE DOUBLEWIDE 60 POUND LIVE LOAD WITH PERIMETER BLOCKING

SOIL CAP.	LEGEND	PIER LOC.	23 FEET WIDE 8'-0" O.C.		24 FEET WIDE 8'-0" O.C.		26 FEET WIDE 8'-0" O.C.		27/28 FEET WIDE 8'-0" O.C.		32 FEET WIDE 8'-0" O.C.	
			REQ'D. PIER CAPACITY (LBS.)	REQ'D. FOOTING (SQ. IN.)	REQ'D. PIER CAPACITY (LBS.)	REQ'D. FOOTING (SQ. IN.)	REQ'D. PIER CAPACITY (LBS.)	REQ'D. FOOTING (SQ. IN.)	REQ'D. PIER CAPACITY (LBS.)	REQ'D. FOOTING (SQ. IN.)	REQ'D. PIER CAPACITY (LBS.)	REQ'D. FOOTING (SQ. IN.)
1000	■	FRAME	1813	300	1863	308	1988	329	2063	342	2396	397
	□	PERIMETER	4148	687	4338	718	4813	797	5354	887	5685	942
1500	■	FRAME	1813	191	1863	197	1988	210	2063	218	2396	253
	□	PERIMETER	4148	438	4338	458	4813	508	5354	565	5685	601
2000	■	FRAME	1813	140	1863	144	1988	154	2063	160	2396	186
	□	PERIMETER	4148	321	4338	336	4813	373	5354	414	5685	440
2500	■	FRAME	1813	111	1863	114	1988	121	2063	126	2396	147
	□	PERIMETER	4148	253	4338	265	4813	294	5354	327	5685	348
3000	■	FRAME	1813	91	1863	94	1988	100	2063	104	2396	121
	□	PERIMETER	4148	209	4338	218	4813	243	5354	270	5685	287

CENTER LINE FOOTING SIZE
FOOTING SIZE
(MINIMUM REQUIRED SIZE IN INCHES)

PIER CAPACITY POUNDS	SOIL CAPACITY				
	1000 PSF	1500 PSF	2000 PSF	2500 PSF	3000 PSF
600	16X16X6	16X16X6	16X16X6	16X16X6	16X16X6
800	16X16X6	16X16X6	16X16X6	16X16X6	16X16X6
1000	16X16X6	16X16X6	16X16X6	16X16X6	16X16X6
1500	16X16X6	16X16X6	16X16X6	16X16X6	16X16X6
2000	18x18x6	16X16X6	16X16X6	16X16X6	16X16X6
2500	20x20x6	16X16X6	16X16X6	16X16X6	16X16X6
3000	22x22x6	18x18x6	16X16X6	16X16X6	16X16X6
3500	24x24x6	19x19x6	17x17x6	16X16X6	16X16X6
4000	25x25x6	20x20x6	18x18x6	16X16X6	16X16X6
4500	27x27x8	22x22x6	19x19x6	17x17x6	16X16X6
5000	29x29x8	23x23x6	20x20x6	18x18x6	16X16X6
5500	30x30x8	24x24x8	21x21x6	18x18x6	17x17x6
6000	31x31x8	25x25x8	22x22x8	19x19x6	18x18x6
6500	33x33x10	26x26x8	23x23x8	20x20x6	18x18x6
7000	34x34x10	27x27x8	23x23x8	21x21x8	19x19x6
7500	36x36x10	28x28x8	24x24x8	22x22x8	20x20x6
8000	37x37x10	29x29x10	25x25x8	22x22x8	20x20x8
8500	38x38x12	30x30x10	26x26x8	23x23x8	21x21x8
9000	39x39x12	31x31x10	27x27x10	24x24x8	22x22x8
10000	42x42x12	33x33x12	28x28x10	25x25x10	23x23x8
11000	45x45x15	35x35x12	29x29x10	26x26x10	24x24x10
12000	47x47x15	36x36x12	31x31x12	27x27x10	25x25x10
13000	48x48x15	38x38x15	32x32x12	29x29x12	26x26x10
14000	51x51x18	40x40x15	33x33x12	30x30x12	27x27x10
15000	53x53x18	41x41x15	35x35x15	31x31x12	28x28x12
16000	-NA-	42x42x15	36x36x15	32x32x12	29x29x12
17000	-NA-	44x44x18	37x37x15	33x33x15	30x30x12
18000	-NA-	46x46x18	38x38x15	34x34x15	31x31x15
19000	-NA-	47x47x18	39x39x15	35x35x15	32x32x15
20000	-NA-	48x48x18	41x41x18	36x36x15	32x32x15
21000	-NA-	50x50x21	42x42x18	37x37x15	33x33x15
22000	-NA-	51x51x21	43x43x18	38x38x18	34x34x315
23000	-NA-	52x52x21	44x44x18	39x39x18	35x35x15

NOTE: FOOTING SIZES ARE FOR SQUARE PADS AND ARE BASED ON THE AREA (SQUARE INCHES) REQUIRED FOR THE LOAD.

TYPICAL CENTER LINE FOOTING SIZE
(MINIMUM REQUIRED SIZE IN INCHES)

TABLE 4-10

EVOR F. JOHNS
REGISTERED
NO.
01656
STATE OF
INDIANA
PROFESSIONAL ENGINEER
12/17/08

BEAM SPACING (FT)	UNIT WIDTH (FT)	WIDTH (IN)	FLOOR LOAD ONLY			30 PSF ROOF ONLY			40 PSF ROOF ONLY			60 PSF ROOF ONLY			FLOOR + 30 PSF			FLOOR + 40 PSF			FLOOR + 60 PSF		
			P (LBS)	MIN. POST / PLATE	MIN FOOTING	P (LBS)	MIN. POST / PLATE	MIN FOOTING	P (LBS)	MIN. POST / PLATE	MIN FOOTING	P (LBS)	MIN. POST / PLATE	MIN FOOTING	P (LBS)	MIN. POST / PLATE	MIN FOOTING	P (LBS)	MIN. POST / PLATE	MIN FOOTING	P (LBS)	MIN. POST / PLATE	MIN FOOTING
8	26	158	5951.3	C	5	5056	C	5	6109.3	C	4	8216	B	4	11007	B	3	12061	B	3	14167	B	2
8	28	165	6215	C	4	5280	C	5	6380	C	4	8580	B	4	11495	B	3	12595	B	3	14795	B	2
8	32	184	6930.7	C	4	5888	C	5	7114.7	C	4	9568	B	4	12819	B	3	14045	B	2	16499	B	2
10	26	158	7439.2	C	4	6320	C	4	7636.7	B	4	10270	B	3	13759	B	3	15076	B	2	17709	A	2
10	28	165	7768.8	B	4	6600	C	4	7975	B	4	10725	B	3	14369	B	2	15744	B	2	18494	A	2
10	32	184	8663.3	B	4	7360	C	4	8893.3	B	4	11960	B	3	16023	B	2	17557	A	2	20623	A	1
12	26	158	8927	B	4	7584	C	4	9164	B	4	12324	B	3	16511	B	2	18091	A	2	21251	A	1
12	28	165	9322.5	B	4	7920	B	4	9570	B	4	12870	B	3	17243	B	2	18893	A	2	22193	A	1
12	32	184	10396	B	3	8832	B	4	10670	B	3	14352	B	2	19228	A	2	21068	A	1	24748	A	1
14	26	158	10415	B	3	8848	B	4	10691	B	3	14378	B	2	19263	A	2	21106	A	1	24793	A	1
14	28	165	10676	B	3	9240	B	4	11165	B	3	15015	B	2	20116	A	1	22041	A	1			
14	32	184	12129	B	3	10304	B	3	12451	B	3	16744	B	2	22433	A	1	24579	A	1			
16	26	158	11903	B	3	10112	B	3	12219	B	3	16432	B	2	22015	A	1	24121	A	1			
16	28	165	12430	B	3	10560	B	3	12760	B	3	17160	B	2	22990	A	1	25190	A	1			
16	32	184	NA	NA	NA	11776	B	3	14229	B	2	19136	A	2									
18	26	158	NA	NA	NA	11376	B	3	13746	B	3	18486	A	2									
18	28	165	NA	NA	NA	11880	B	3	14355	B	2	19305	A	2									
18	32	184	NA	NA	NA	13248	B	3	16008	B	2	21528	A	1									
20	26	158	NA	NA	NA	12640	B	3	15273	B	2	20540	A	1									
20	28	165	NA	NA	NA	13200	B	3	15950	B	2	21450	A	1									
20	32	184	NA	NA	NA	14720	B	2	17787	A	2	23920	A	1									

NOTE:
FOR 60 PSF ROOF LOAD MAXIMUM BEAM SPACING IS 12'-0".

COLUMN & FOOTING SIZING TABLE

TABLE 4-11

	POST SIZE ASTM A500(B) STEEL	PLATE SIZE ASTM A36 STEEL
(A)	3" I.D., 7.58 LB/FT, 9'-6" MAX LENGTH	7"x 7"x 5/8"
(B)	2 1/2" I.D., 5.79 LB/FT, 9'-6" MAX LENGTH	6"x 6"x 9/16"
(C)	2" I.D., 3.56 LB/FT, 9'-6" MAX LENGTH	4"x 4"x 5/16"

POST & PLATE SIZE

TABLE 4-12

FOOTING SIZE
1. 48 x 48 x 14
2. 42 x 42 x 12
3. 36 x 36 x 10
4. 30 x 30 x 9
5. 24 x 24 x7

FOOTING SIZE

TABLE 4-13

8 INCH WIDE FLANGE
TRANSVERSE BEAM LENGTHS

HOME WIDTH	2 x 6 EXTERIOR WALLS	2 x 4 EXTERIOR WALLS
23' WIDE	8"x18#x21'-3 1/2"	8"x18#x20'-11 1/2"
24' WIDE	8"x18#x22'-3 1/2"	8"x18#x21'-11 1/2"
26' W. (26'-4")	8"x21#x24'-9 1/2"	8"x21#x24'-5 1/2"
27' W. (27'-0")	8"x21#x25'-5 1/2"	8"x21#x25'-1 1/2"
28' WIDE	8"x21#x25'-11 1/2"	
32' W. (30'-8")	8"x21#x29'-1 1/2"	8"x21#x28'-9 1/2"
32' W. (30'-4")	8"x21#x28'-9 1/2"	8"x21#x28'-5 1/2"
14' WIDE		8"x21#x12'-5 1/2"
8' TAG		8"x21#x20'-2 1/2"
12' TAG		8"x21#x23'-8 1/2"
6 INCH I-BEAMS ARE UNACCEPTABLE		

FOUNDATION MEETS THE GUIDELINES PUBLISHED IN THE PERMANENT FOUNDATION GUIDE FOR MANUFACTURED HOUSING DATED SEPTEMBER 1996

NOTES:
1. FILL CONCRETE BLOCKS WITH CONCRETE AT ALL ANCHOR BOLT LOCATIONS.
2. WHEN THE FOUNDATION IS POURED CONCRETE, ANCHOR BOLT IS TO BE 7 INCHES INTO CONCRETE.

NOTE
ABOVE TRANSVERSE I-BEAM LENGTHS ARE BASED ON 8" PERIMETER WALLS

TRANSVERSE BEAM LENGTHS

FIGURE 4-14

EVOR F. JOHNS
REGISTERED
NO.
01656
STATE OF
PROFESSIONAL ENGINEER
12/17/08

FOOTING SIZES BELOW FRAME (CRAWL FOUNDATIONS)								
SPAN (FT)	UNIT WIDTHS (PIER LOADING)							
	28'-WIDE (5294lbs)				32'-WIDE (5968lbs)			
	SOIL CAPACITY				SOIL CAPACITY			
	1000 PSF	2000 PSF	3000 PSF	4000 PSF	1000 PSF	2000 PSF	3000 PSF	4000 PSF
14'	29x29x8	20x20x6	17x17x6	16X16X6	31x31x8	22x22x8	18x18x6	16X16X6

FOOTING SIZES BELOW FRAME
(CRAWL FOUNDATIONS)

TABLE 4-15

MARRIAGE WALL FOOTING SIZE (28'-WIDE CRAWL FOUNDATION)											
SOIL CAPACITY											
30 # ROOF LIVE LOAD PIER LOAD 5600lbs				40 # ROOF LIVE LOAD PIER LOAD 6700lbs				60 # ROOF LIVE LOAD PIER LOAD 8900lbs			
1000 PSF	2000 PSF	3000 PSF	4000 PSF	1000 PSF	2000 PSF	3000 PSF	4000 PSF	1000 PSF	2000 PSF	3000 PSF	4000 PSF
30x30x8	21x21x6	17x17x6	16x16x6	34x34x10	23x23x8	19x19x6	16x16x6	39x39x12	27x27x10	21x21x8	19x19x6

MARRAIGE WALL FOOTING SIZE
(28'-WIDE CRAWL FOUNDATION)

TABLE 4-16

MARRIAGE WALL FOOTING SIZE (32'-WIDE CRAWL FOUNDATION)											
SOIL CAPACITY											
30 # ROOF LIVE LOAD PIER LOAD 6546lbs				40 # ROOF LIVE LOAD PIER LOAD 7786lbs				60 # ROOF LIVE LOAD PIER LOAD 10266lbs			
1000 PSF	2000 PSF	3000 PSF	4000 PSF	1000 PSF	2000 PSF	3000 PSF	4000 PSF	1000 PSF	2000 PSF	3000 PSF	4000 PSF
33x33x10	23x23x8	18x18x6	16x16x6	36x36x10	25x25x8	20x20x8	17x17x6	43x43x15	29x29x10	23x23x8	20x20x8

MARRAIGE WALL FOOTING SIZE
(32'-WIDE CRAWL FOUNDATION)

TABLE 4-17

EVOR F. JOHNS
REGISTERED
NO.
01666
STATE OF
INDIANA
PROFESSIONAL ENGINEER
12/17/08

COLUMN FOOTING SIZE (30# CRAWL FOUNDATION)										
SPAN (FT)	28'-WIDE UNIT					32'-WIDE UNIT				
	PIER LOAD	SOIL CAPACITY				PIER LOAD	SOIL CAPACITY			
		1000 PSF	2000 PSF	3000 PSF	4000 PSF		1000 PSF	2000 PSF	3000 PSF	4000 PSF
4'	1500	16x16x6	16x16x6	16x16x6	16x16x6	1500	16x16x6	16x16x6	16x16x6	16x16x6
5'	1500	16x16x6	16x16x6	16x16x6	16x16x6	2000	16x16x6	16x16x6	16x16x6	16x16x6
6'	2000	17x17x6	16x16x6	16x16x6	16x16x6	2000	17x17x6	16x16x6	16x16x6	16x16x6
7'	2000	18x18x6	16x16x6	16x16x6	16x16x6	2500	19x19x6	16x16x6	16x16x6	16x16x6
8'	2500	19x19x6	16x16x6	16x16x6	16x16x6	2500	20x20x6	16x16x6	16x16x6	16x16x6
9'	2500	20x20x6	16x16x6	16x16x6	16x16x6	3000	21x21x6	16x16x6	16x16x6	16x16x6
10'	3000	21x21x6	16x16x6	16x16x6	16x16x6	3500	22x22x6	16x16x6	16x16x6	16x16x6
11'	3500	22x22x6	16x16x6	16x16x6	16x16x6	3500	24x24x6	17x17x6	16x16x6	16x16x6
12'	3500	23x23x6	16x16x6	16x16x6	16x16x6	4000	25x25x6	17x17x6	16x16x6	16x16x6
13'	4000	24x24x6	17x17x6	16x16x6	16x16x6	4500	26x26x8	18x18x6	16x16x6	16x16x6
14'	4000	25x25x6	17x17x6	16x16x6	16x16x6	4500	27x27x6	19x19x6	16x16x6	16x16x6
15'	4500	26x26x8	18x18x6	16x16x6	16x16x6	5000	28x28x8	19x19x6	16x16x6	16x16x6
16'	4500	27x27x8	19x19x6	16x16x6	16x16x6	5000	29x29x8	20x20x6	16x16x6	16x16x6
17'	5000	28x28x8	19x19x6	16x16x6	16x16x6	5500	29x29x8	20x20x6	17x17x6	16x16x6
18'	5000	29x29x8	20x20x6	16x16x6	16x16x6	6000	30x30x8	21x21x6	17x17x6	16x16x6
19'	5500	29x29x8	20x20x6	17x17x6	16x16x6	6000	31x31x8	21x21x6	17x17x6	16x16x6
20'	5500	30x30x8	21x21x6	17x17x6	16x16x6	6500	32x32x10	22x22x8	18x18x6	16x16x6
21'	6000	31x31x8	21x21x6	17x17x6	16x16x6	7000	33x33x10	23x23x8	18x18x6	16x16x6
22'	6500	32x32x10	22x22x8	18x18x6	16x16x6	7000	34x34x10	23x23x8	19x19x6	16x16x6
23'	6500	33x33x10	22x22x8	18x18x6	16x16x6	7500	35x35x10	24x24x8	19x19x6	17x17x6
24'	7000	33x33x10	23x23x8	18x18x6	16x16x6	7500	36x36x10	24x24x8	20x20x6	17x17x6

COLUMN FOOTING SIZE
(30# CRAWL FOUNDATION)

TABLE 4-18

EVOR F. JOHNS
REGISTERED
NO.
01656
STATE OF
INDIANA
PROFESSIONAL ENGINEER
12/17/08

COLUMN FOOTING SIZE (40# CRAWL FOUNDATION)										
SPAN (FT)	28'-WIDE UNIT					32'-WIDE UNIT				
	PIER LOAD	SOIL CAPACITY				PIER LOAD	SOIL CAPACITY			
		1000 PSF	2000 PSF	3000 PSF	4000 PSF		1000 PSF	2000 PSF	3000 PSF	4000 PSF
4'	1500	16x16x6	16x16x6	16x16x6	16x16x6	2000	16x16x6	16x16x6	16x16x6	16x16x6
5'	2000	17X17X6	16x16x6	16x16x6	16x16x6	2000	18X18X6	16x16x6	16x16x6	16x16x6
6'	2500	18X18X6	16x16x6	16x16x6	16x16x6	2500	20x20x6	16x16x6	16x16x6	16x16x6
7'	2500	20X20X6	16x16x6	16x16x6	16x16x6	3000	21x21x6	16x16x6	16x16x6	16x16x6
8'	3000	21X21X6	16x16x6	16x16x6	16x16x6	3500	22x22x6	16x16x6	16x16x6	16x16x6
9'	3500	22X22X6	16x16x6	16x16x6	16x16x6	3500	24x24x6	17X17X6	16x16x6	16x16x6
10'	3500	24X24X6	17X17X6	16x16x6	16x16x6	4000	25x25x6	17X17X6	16x16x6	16x16x6
11'	4000	25X25X6	17X17X6	16x16x6	16x16x6	4500	27x27x8	18X18X6	16x16x6	16x16x6
12'	4500	26X26X8	18X18X6	16x16x6	16x16x6	5000	28x28x8	19x19x6	16x16x6	16x16x6
13'	4500	27X27X8	19X19X6	16x16x6	16x16x6	5500	29x29x8	20x20x6	16x16x6	16x16x6
14'	5000	28X28X8	20X20X6	16x16x6	16x16x6	5500	30x30x8	21x21x6	17X17X6	16x16x6
15'	5500	29X29X8	20X20X6	16x16x6	16x16x6	6000	31x31x8	22x22x8	17X17X6	16x16x6
16'	5500	30X30X8	21X21X6	17X17X6	16x16x6	6500	32x32x10	22x22x8	18X18X6	16x16x6
17'	6000	31X31X8	21X21X6	17X17X6	16x16x6	7000	33x33x10	23x23x8	18X18X6	16x16x6
18'	6500	32X32X10	22X22X8	18X18X6	16x16x6	7000	34x34x10	23x23x8	19x19x6	16x16x6
19'	7000	33X33X10	23X23X8	18X18X6	16x16x6	7500	35x35x10	24x24x8	20x20x6	17X17X6
20'	7000	34X34X10	23X23X8	19X19X6	16x16x6	8000	36x36x10	25x25x8	20x20x8	17X17X6
21'	7500	35X35X10	24X24X8	19X19X6	17X17X6	8500	38x38x12	25x25x8	21x21x8	18X18X6
22'	8000	36X36X10	24X24X8	20X20X8	17X17X6	9000	39x39x12	26x26x8	21x21x8	18X18X6
23'	8000	36X36X10	25X25X8	20X20X8	17X17X6	9000	39x39x12	27x27x10	22x22x8	19x19x8
24'	8500	38X38X12	26X26X8	21X21X8	18X18X6	9500	40x40x12	27x27x10	22x22x8	19x19x8

COLUMN FOOTING SIZE
(40# CRAWL FOUNDATION)

TABLE 4-19

EVOR F. JOHNS
REGISTERED
NO.
01665
STATE OF
PROFESSIONAL ENGINEER
12/17/08

COLUMN FOOTING SIZE (60# CRAWL FOUNDATION)										
SPAN (FT)	28'-WIDE UNIT					32'-WIDE UNIT				
	PIER LOAD	SOIL CAPACITY				PIER LOAD	SOIL CAPACITY			
		1000 PSF	2000 PSF	3000 PSF	4000 PSF		1000 PSF	2000 PSF	3000 PSF	4000 PSF
4'	2000	18x18x6	16x16x6	16x16x6	16x16x6	2500	19x19x6	16x16x6	16x16x6	16x16x6
5'	2500	20x20x6	16x16x6	16x16x6	16x16x6	3000	21x21x6	16x16x6	16x16x6	16x16x6
6'	3000	22x22x6	16x16x6	16x16x6	16x16x6	3500	23x23x6	16x16x6	16x16x6	16x16x6
7'	3500	23x23x6	16x16x6	16x16x6	16x16x6	4000	25x25x6	17x17x6	16x16x6	16x16x6
8'	4000	25x25x6	17x17x6	16x16x6	16x16x6	4500	27x27x8	19x19x6	16x16x6	16x16x6
9'	4500	27x27x8	19x19x6	16x16x6	16x16x6	5000	28x28x8	20x20x6	16x16x6	16x16x6
10'	5000	28x28x8	20x20x6	16x16x6	16x16x6	5500	30x30x8	21x21x6	17x17x6	16x16x6
11'	5500	29x29x8	20x20x6	17x17x6	16x16x6	6000	31x31x8	22x22x8	18x18x6	16x16x6
12'	6000	31x31x8	21x21x6	17x17x6	16x16x6	7000	33x33x10	23x23x8	18x18x6	16x16x6
13'	6500	33x33x10	22x22x8	18x18x6	16x16x6	7500	35x35x10	24x24x8	19x19x6	17x17x6
14'	7000	34x34x10	23x23x8	19x19x6	16x16x6	8000	36x36x10	24x24x8	20x20x8	17x17x6
15'	7500	35x35x10	24x24x8	19x19x6	17x17x6	8500	38x38x12	25x25x8	21x21x8	18x18x6
16'	8000	36x36x10	25x25x8	20x20x8	17x17x6	9000	39x39x12	26x26x8	21x21x8	18x18x6
17'	8500	38x38x12	25x25x8	21x21x8	18x18x6	9500	40x40x12	27x27x10	22x22x8	19x19x8
18'	9000	39x39x12	26x26x8	21x21x8	18x18x6	10000	41x41x12	28x28x10	23x23x8	19x19x8
19'	9500	40x40x12	27x27x10	22x22x8	19x19x8	10500	43x43x15	29x29x10	23x23x8	20x20x8
20'	1000	41x41x12	28x28x10	22x22x8	19x19x8	11000	44x44x15	29x29x10	24x24x10	21x21x8
21'	10500	42x42x12	28x28x10	23x23x8	20x20x8	11500	45x45x15	30x30x10	24x24x10	21x21x8
22'	11000	44x44x15	29x29x10	23x23x8	20x20x8	12000	47x47x15	31x31x12	25x25x10	22x22x8
23'	11500	45x45x15	30x30x10	24x24x10	21x21x8	12500	47x47x15	32x32x12	25x25x10	22x22x8
24'	12000	46x46x15	30x30x10	25x25x10	21x21x8	13500	49x49x15	32x32x12	26x26x10	23x23x10

COLUMN FOOTING SIZE
(60# CRAWL FOUNDATION)

TABLE 4-20

EVOR F. JOHNS
REGISTERED
NO.
01656
STATE OF
INDIANA
PROFESSIONAL ENGINEER
12/17/08

Installation

5-1 PROPER ALIGNMENT

A manufactured home is cambered and reverse cambered along the I-beam as part of the engineering for the stress of transportation. Likewise, it is cambered from side to side for transportation stresses and live load as well as dead load stresses. Consequently, siding and flooring and rooflines will have variations, due to camber lines, which are normal. The home should be blocked and shimmed on the foundation to follow natural camber and reverse camber lines as the home is received from the factory.

5-2 POSITIONING AND BLOCKING

The site must be properly prepared as instructed earlier in this manual prior to positioning the home. All concrete work must be completed, all ground anchoring devices must be installed (see Section 9-2), and all service facilities for water, gas, electrical, and drain connections must be complete. Any other items, which could be difficult to install after the home is positioned, should be placed in their proper locations at this time.

Select the first section of the home to be set and move it into position on the prepared site.

CAUTION: If it is decided to crane set the home on to its supporting system, extreme care must be taken to ensure that the lifting devices, straps, or cables do not come into contact with the home above the level of the bottom surface of the steel frame. The perimeter of the home was not designed to withstand the point loading of such contact.

5-3 HINGED ROOF DEPLOYMENT

If the home has a hinged roof it should be raised and assembled prior to blocking the home in its final resting position through the following procedure:

- Raise the hinged portion of the roof using a series of lifting devices located along the ridge beam, on approximate 12 foot centers, until the knee wall or kingposts can swing into position under the roof deck and against its stop. (See Figure 5-1).
- Lower the roof until it is supported by the knee wall or kingposts. Then adjust as needed to insure an even roof transition across the hinge line.
- Secure each truss fixed kingpost to the knee wall plate by driving No. 8 x 3-inch screws at a 60-degree angle up through the plate into the truss. One fastener from each side, complete the connection by using the galvanized strap provided at the king port, securing it with 6, 16ga X 1 1/2 inch narrow crown staples. (See Figure 5-2).
- For hinged roof or eaves and the site-installed eaves in other than wind zone 1 applications, refer to the addendum in the back of this instruction.
- Fasten the roof sheathing from the upper portion of the roof to the top of the truss on the lower or fixed portion of the roof with two 8d common nails at each truss. (See Figure 5-3)

5-4 RAISING THE HOME

If jacks are to be used, comply with all jacking safety precautions and the procedure below. Lifting the home with jacks involves potential risks and must be done with utmost care and caution. Failure to follow jacking warnings and procedures may result in serious injury or death. Please read the Jacking Safety Precautions before lifting the home with jacks.

JACKING SAFETY PRECAUTIONS:

- No one should be under the home's I-beams while the jacks are being operated or while the home is supported only on the jacks.
- Use jacks only for raising the home. Do not rely on the jacks to support the home.
- Obey all OSHA regulations.
- Make sure adequate safety cribbing is in place whenever the home is placed on jacks. (See Figure 5-4).
- Use a minimum of five commercial quality jacks, each with a rating of at least 12 tons.
- Jack only on the main chassis I-beam, centering jacks directly under the beam.
- To distribute the concentrated loads from jacks to I-beam, place a minimum 4 inch by 6 inch by 3/8-inch thick steel plate, between the main chassis I-beam and the jack head. (See Figure 5-5).

- Locate the jack base on firm ground. Never jack on freshly disturbed soil or where an underground sewer pipe may be located.
- Use a firm support under the jack base to prevent tipping or settling of the jack. A minimum 16” x 16” or larger wood or rigid fiberglass pad is recommended. Never use concrete blocks as a support for a jack.

5-5 JACKING PROCEDURE

Always follow the sequence outlined below to avoid overstressing structural members when jacking the home into position:

- Block the wheels so the home does not roll.
- Install the safety cribbing at the hitch, behind the axles, and any other place as deemed necessary for safety and to protect the home. (see Figure 5-4)
- Locate one jack at the hitch and level the home section lengthwise so the front and the rear are at the same height.
- Place a minimum of one jack just of the first spring hanger and another just behind the last spring hanger of each I-beam, making sure not to place jacks where the piers will go. (see Figure 5-6)
- Operating the jacks simultaneously, or sequentially in very small amounts, lift the home section until it is slightly higher than the desired pier height.

5-6 CONSTRUCT PIERS

With the home section jacked into its rough position, carefully construct the supporting pier along the I-beams as discussed earlier in this manual. Each pier must rest fully on its footing.

5-7 LEVEL THE PIERS

Set up a liquid level with the fluid at the desired height of the piers. Check the height of each pier as it is constructed to ensure that all of the I-beam piers are within 1/4 inch in height of each adjacent pier. The same tolerance will apply for marriage line and perimeter piers when constructed.

5-8 USING A LIQUID LEVEL

A liquid level is a standard device for leveling the home. The level consists of the following components (see Figure 5-7):

- One container (five gallon bucket or one gallon jug).
- 150 feet of 1/2 inch diameter plastic tubing.
- Fittings for container to tubing.
- Valve for terminal end of tubing.
- Liquid for system: colored water in warm climates, windshield washing fluid in cold climates.

HOW TO USE A LIQUID LEVEL:

- Position the level such that it can reach all piers. (See Figure 5-8).
- Place the container so that the liquid in the container is at the same level as the desired level of the top of the supports under the home, allowing for any bracing below the level of the I-beams.
- Uncoil the tubing and fill with fluid, taking care not to introduce bubbles into the hose. Never allow anything to crimp or crush the tubing so as to impede the free flow of the liquid.
- Hold the valve below the level of the container; open the valve to bleed out any air and close the valve.
- Locate the tubing adjacent to a pier that is set to the desired final height. Position the valve above the pier and open the valve. Move the container up or down to where the liquid level is at the desired final height of the pier. Maintain the container in that position and close the valve.
- Move the tubing to the next pier. Hold the valve above the pier and open it. Set the pier height to the level of the liquid in the tubing and close the valve. Repeat this step until all piers are at the same level.

5-9 SET THE HOME

With the piers in place and within the height tolerance, place the spacers and shims on the cap blocks and lower the home section in place. The safety cribbing placed in the A-frame area and behind the axles should now be removed along with any other supports which were needed during the set. The jacks can then be lowered together allowing the frame to rest on the tapered hardwood shims on top of the concrete block piers when the home section is resting on the piers. Remove all jacks from under the frame.

Remove the wood stripping and polyethylene close-up material from all sections of the home as needed. Be careful not to damage any adjacent wallboard or siding as the close-up materials are removed. Finish by driving flush or removing all protruding nails or staples along the mating surfaces. Any unintended material sticking out could hold the sections apart. Remove any shipping braces that extend beyond the mating surface of the unit at this time.

NOTE: Take special notice of temporary structural supports and bracing locations, as they must be reinstalled for any secondary movement.

Before the final positioning of each additional section, a marriage line gasket of fiberglass insulation or an equivalent material must be fastened on the mating edges of the floor, walls, and ceiling to limit air infiltration after the home is installed to resist the entry of air, water, water vapor, insects, and rodents. Material used for this purpose should not be placed in a position where it could restrict air ducts in the heating system supply or return air ducts which might cross at the floor line or through the ridge beam. If the crossover duct system requires the use of a connection seal, make certain that it is in place prior to joining the sections.

CAUTION: Upon completion of the exterior close-up, no gaps are permitted between the structural elements being interconnected along the mate-line of multi-section homes. However, prior to completion of the exterior close-up, gaps that do not exceed one inch are permitted between structural elements provided:

- The gaps are closed before completion of close-up;
- The home sections are in contact with each other; and
- The mating gasket is providing a proper seal. All such gaps must be shimmed with dimensional lumber, and fastener lengths used to make connections between the structural elements may need to be increased to provide adequate penetration into the receiving member.

Position the next home section alongside the first so that the section ends are even at the floor line. Whether the floors are several inches apart or several feet, it is recommended that a roller system be used to complete the positioning of the second section. The roller system consists of dollies, which utilize rollers and are so constructed that hydraulic jacks can be positioned on the rollers and under the frame members allowing the home to be rolled sideways very easily (see Figure 5-9). It is important that the instructions of the roller systems manufacturer are followed.

Raise this section and each additional section, in order, installing the pier supports the same way as the first section.

After the floors have been positioned together and aligned, fasten the side rails of the floor together with 3/8" x 5" lag screws. Drive fasteners from alternate sides at 23 inches on center along the length of the floor from end to end (see Figure 5-10). An additional two lags must be installed at each end so that there are three lags, 4 inches on center. Pilot holes are to be drilled for lag screws to avoid splitting the rails. When one side of the floor is lower than the other, use a jack to raise the side rail of the low side. Once the floors are even, lag the side rails together. Continue to check alignment and fasten the floors together for the length of the home. Any holes cut in the bottom covering must be repaired as described later on in this instruction.

CAUTION: Do not use the lag screws to pull the home sections together.

Additional floor sections should be positioned and aligned with the other floor sections as described above. The additional floor sections must be fastened as described above.

5-10 ALIGN AND CONNECT

ENDWALL CONNECTION

Inside the home, the ceiling panels and the endwalls on each section must align with each other. If the sections are not in proper alignment, they may be adjusted by shifting the house. This is done by raising the corner of an endwall that needs to go in at the top. This will cause the ceiling on the opposite side to move forward as

illustrated in Figure 5-11. When the endwalls become flush, fasten them together at the front and back end of the house using No. 8" x 3" screws, 10 inches on center, driven from alternate sides at a 30 degree angle to the wall. Where the endwalls are shimmed (see 5-9, 1st Caution) increase the screw length to 4 1/2 ". A fastener must be within 4 inches of both the top and bottom plate of the endwall. (See Figure 5-12). The end wall of tag units connect in the same manner except when end wall abuts a side wall, the screws will not be driven from alternate sides (see Figure B). Once the endwalls are secured, make sure the roofs are aligned and that the ceilings line-up. If they are still off, shift the section a little more to bring the roofs and ceilings into alignment.

MARRIAGE WALL OPENINGS

The adjacent framing at marriage wall openings must be fastened together using No. 8 X 4 inch screws 16 inches O.C. These connections can be made through 2 X 3 studs. 2 X 4 and 2 X 6 studs will be toe screwed. (See Figure 5-14).

CEILING CONNECTION

By carefully inspecting the ceiling or by using a straight edge, low points can be determined. Start in the front and work to the back of the house. To raise the low portion, use a hydraulic jack and a padded tee underneath the low point. See Figure 5-15. Carefully raise the jack until the two ceiling sections are flush. Then, fasten the two ridge beams together on the outside of the home. This procedure should be repeated at each point where the one side of the ceiling is low.

NOTE: It is imperative that the ceilings on each section be exactly flush before fastening the ridge beams together.

To secure the two roof sections together, drive 3/8" x 7" lag screws at a 60 to 90 degree angle so they penetrate both ridge beams. Install the lag screws from alternate sides on 23-inch centers, wind zone I, or 17 inches on center, wind zone II along the length of the home. An additional two lags must be installed at each end so that there are three lags, 4 inches on center. (See Figure 5-16).

In those cases where the connection is made through the roof system, such as the mating gables of a tag unit, drive No. 8 x 3 inch flat head screws at a 60 to 90 degree angle so they penetrate the truss on each side of the joint. Two screws must be installed at each connection, one from either side, 16 inches on centers for wind zone I and 12 inches on centers for wind zone II.

NOTE: Remember, the fasteners are used to keep the sections together and must not be used as a way to pull them together.

5-11 COMPLETE INSTALLATION

The electrical and water supply systems cross connections can now be made. The electrical connections have been identified and numbered. Any holes cut in the bottom-board must be repaired. Refer to the Utility Connections and Electrical Systems sections of this manual for the procedures to be followed when making there cross connections.

The alignment of the home can be fine tuned by driving the tapered hardwood shims between the frame and the piers to even out any low areas caused by the compressive weight of the home on the piers.

After completion of the alignment and installation procedure, all doors and windows should be checked to see that they operate freely without binding. If binding does occur, the alignment will need to be adjusted. A properly aligned home may not be exactly level. Refer to "Proper Alignment" earlier in this section.

At this point the removable hitch and axles can be detached from the integral floor system if desired (removable hitch is optional) and placed where the homeowner specifies for storage (see Figures 5-17 and 5-18).

The completed set-up must be checked in 8 weeks with corrective action being taken to compensate for any pier or footing settlement, as well as any shim compression due to unit weight. All doors and windows should be checked to see that they still operate freely without binding and that the weather seals are still intact. The set-up should further be checked on an annual basis as called for in the Home Owners Manual as owner maintenance.

5-12 CONSEQUENCES OF INCORRECT BLOCKING AND ALIGNMENT

Incorrect blocking and alignment of the home could produce unevenness in the home and these related conditions:

- Buckling and/or loosening of walls, partitions, siding, ceilings, doors, floors, linoleum, carpeting, insulation, wiring, sinks, tubs, toilets, weather-stripping and miscellaneous fixed original fixtures of the home;
- Leaking windows, doors, roofs, ceilings, walls, floors, seams, and junctions generally caused from rain, snow, or moisture.
- Improper closing, binding, and sagging of windows, cabinets, and interior and exterior doors; and
- Malfunctioning of plumbing, water outlets, lighting fixtures and electric heating and air conditioning systems.

5-13 GROUND ANCHORING

Once the home is in its final resting position and has been completely supported and aligned, the ground anchoring system can be installed. The purpose of the ground anchoring system is to provide resistance to counter the lateral and uplift forces of the wind which can move the unanchored home off its supporting system causing structural damage. Multiple story homes and homes with increased roof slopes may have reduced anchor spacings.

CAUTION: If the anchoring system is not properly installed, the integral floor system of the home could actually be damaged or the alignment of the home changed. Follow the equipment manufacturer's recommendations.

Ground anchor straps should be alternately tensioned on opposite sides of the home to avoid the problems mentioned above.

5-14 PRE-ANCHORING INSPECTION

At this time all furniture, carpet, fixtures, or other loose items provided with the home should be installed. All shipping blocks, brackets, and/or clips installed on appliances for shipment should be removed. All clamps or brackets installed on windows and doors for shipping purposes must have been removed and the operation of these items checked.

When the home was manufactured, the doors and windows were fully operational and were sealed against the weather as needed. Should any windows or doors bind or not close properly, an adjustment to the alignment of the home is needed. Door and window weather seals should be inspected to ensure that they are intact.

The utilities should now be connected and tested; however, this will be covered in another section of this instruction.

5-15 PORCHES AND DECKS

Porch and deck framework must be supported at the vertical columns supporting the roof along their perimeter. Hinged decks and side porch framework must also be supported along their outer perimeter not exceeding 6 feet on center. These supports are to be of the same construction as the piers described earlier in this instruction.

A hinged porch installed on the end of a home section may require the installation of the last few boards to complete the deck. Position the boards as needed following the existing pattern. Fasten in place using 16d galvanized nails or No. 8 galvanized screws matching the placement on the pre-installed boards.

Where a hinged porch has been installed on the end of the home and a masonry wainscot material has been applied, it may be necessary to lower the deck onto temporary supports prior to bringing the home sections together.

Steps, handrails, and guardrails are to be installed in keeping with the requirements of the LAHJ where the offset between the porch or deck surface and the finished grade of the home site exceeds the maximum allowed without protection.

5-16 MASONRY FACED FIREPLACES

Fireplace installations having an application of floor to ceiling masonry on the front wall of the enclosure can add up to 180 pounds per linear foot of additional concentrated load to the floor of the home. This additional loading will require additional foundation support. This support must be in the form of properly sized footings and piers as described in this manual or as footings and column posts as described on the individual home foundation plans and detail drawings.

Due to the random nature of fireplace placement and masonry application the location of such installations cannot be predetermined on each home produced. Additional supports should be added to each I-beam of the home frame which intersects the front enclosure wall and where the wall meets the mating line or exterior wall of the home.

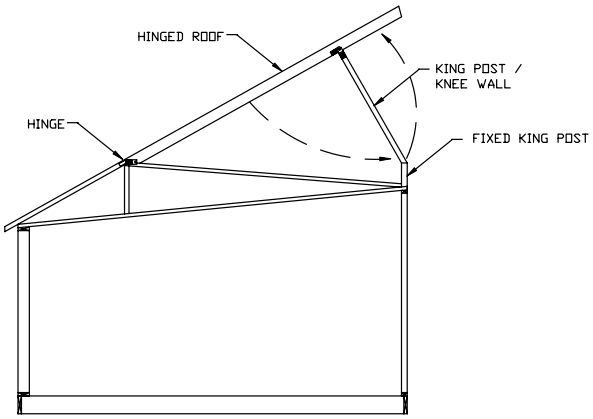

HINGED ROOF DETAIL

FIGURE 5-1

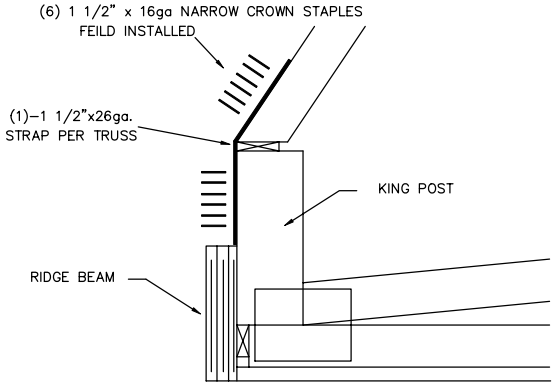

HINGED TRUSS SWING LEG STRAPPING

FIGURE 5-2

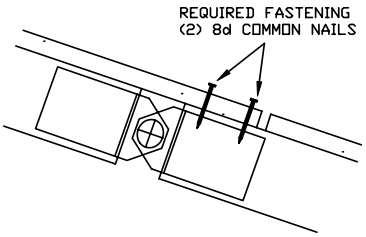

ROOF DECKING FASTENING AT HINGE

FIGURE 5-3

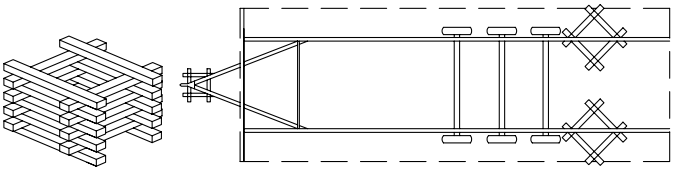

TEMPORARY SAFETY SUPPORTS

FIGURE 5-4

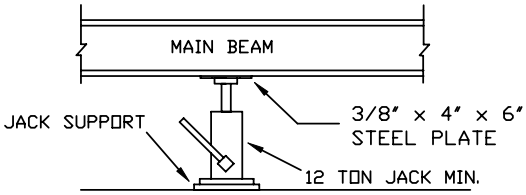

TYPICAL JACK PLACEMENT

FIGURE 5-5

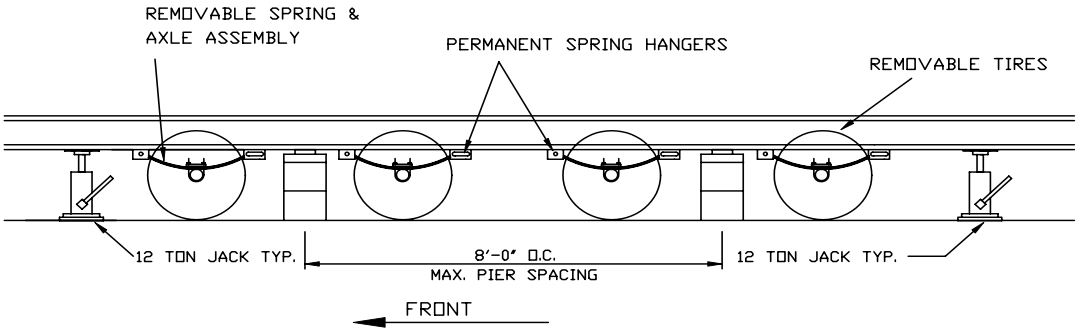

TYPICAL FRAME SUPPORT IN AXLE AREA

FIGURE 5-6

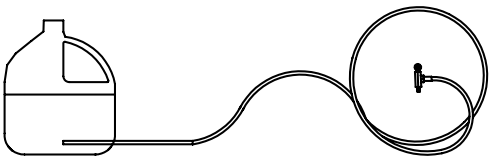

TYPICAL LIQUID LEVEL

FIGURE 5-7

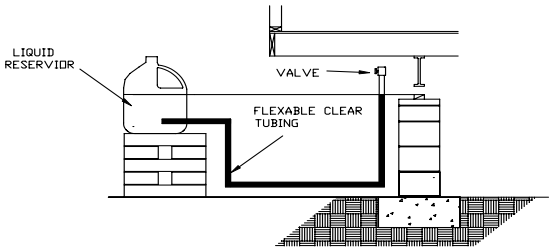

LEVELING PIER SUPPORTS

FIGURE 5-8

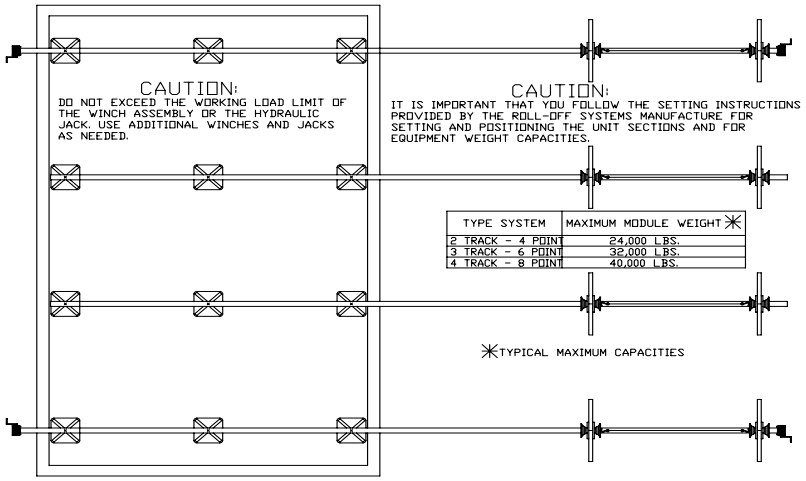

TYPE SYSTEM	MAXIMUM MODULE WEIGHT ✳
2 TRACK - 4 POINT	24,000 LBS.
3 TRACK - 6 POINT	32,000 LBS.
4 TRACK - 8 POINT	40,000 LBS.

TYPICAL ROLL-OFF SYSTEM

FIGURE 5-9

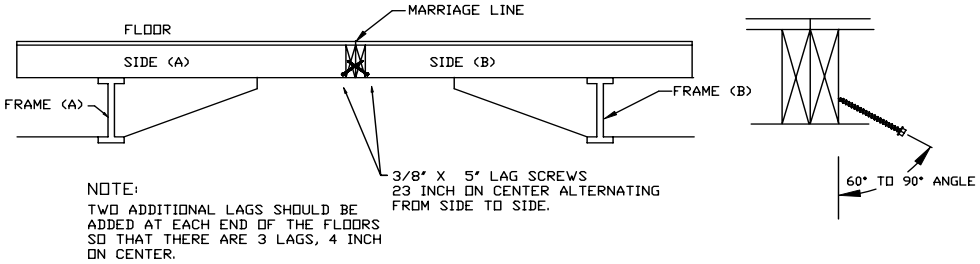

TYPICAL MARRIAGE LINE CONNECTION

(FLOOR)

FIGURE 5-10

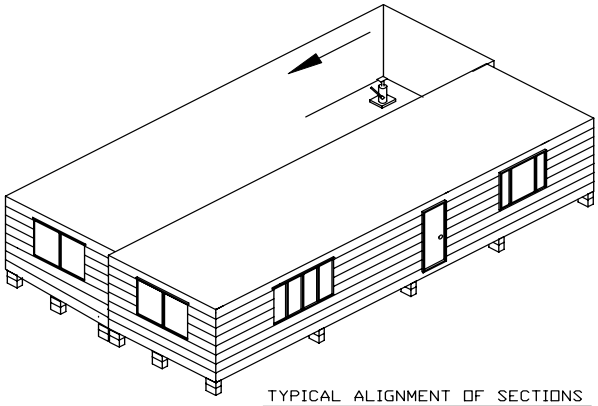

TYPICAL ALIGNMENT OF SECTIONS

FIGURE 5-11

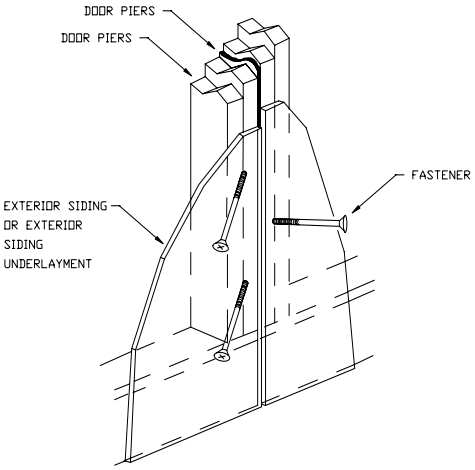

TYPICAL MARRIAGE LINE CONNECTION

(ENDWALL)

FIGURE 5-12

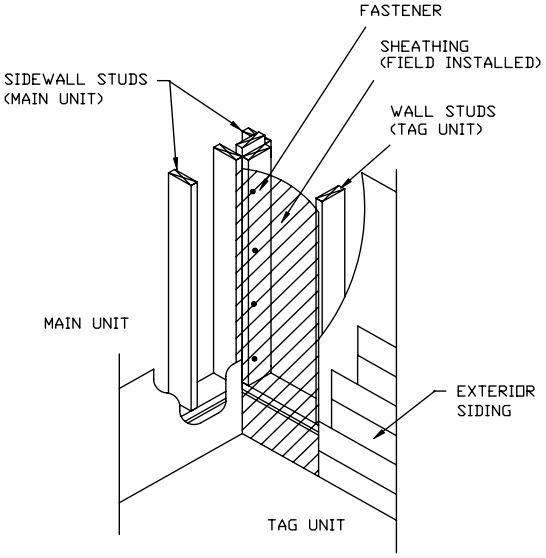

TYPICAL MAIN UNIT TO TAG UNIT CONNECTION

(EXTERIOR WALLS)

FIGURE 5-13

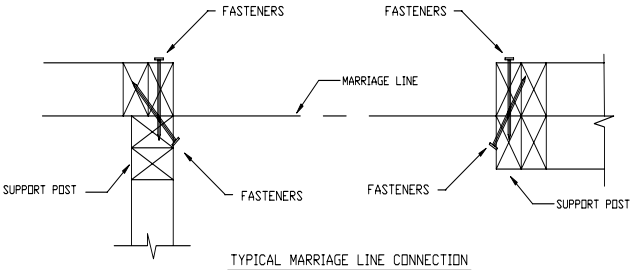

TYPICAL MARRIAGE LINE CONNECTION

(COLUMN SUPPORTS)

FIGURE 5-14

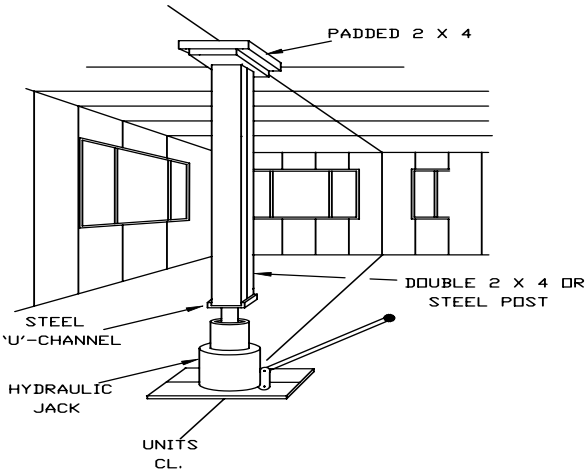

TYPICAL CEILING LEVELING

FIGURE 5-15

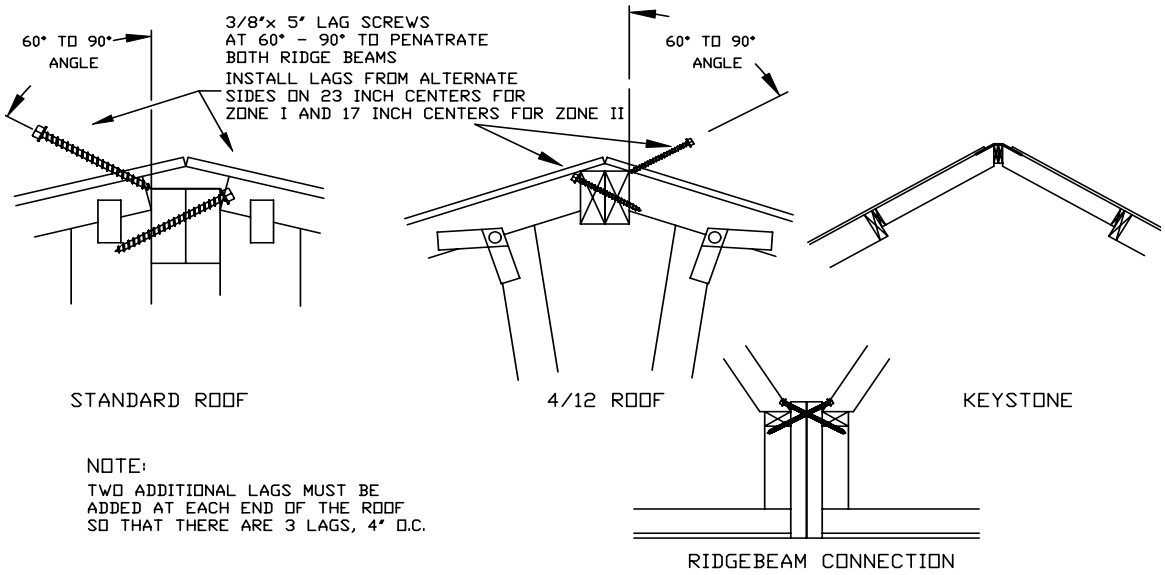

TYPICAL MARRIAGE LINE CONNECTION
(RIDGEBEAM & ROOF)

FIGURE 5-16

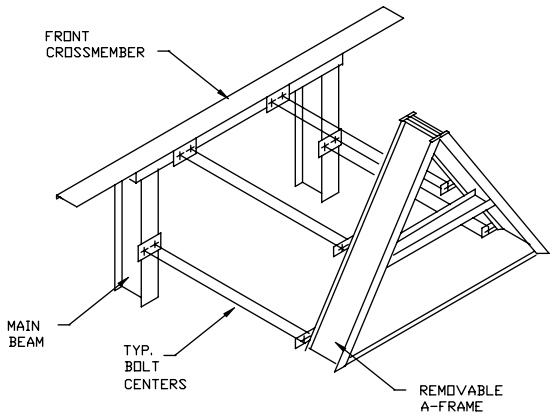

(NOTE: AS VIEWED FROM UNDERNEATH THE HOME.)

TYPICAL REMOVABLE A-FRAME

FIGURE 5-17

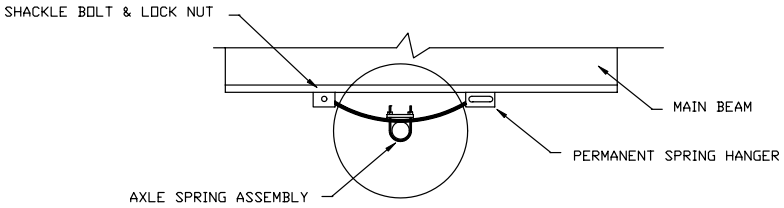

TYPICAL REMOVABLE AXLES

FIGURE 5-18

Closure

6-1 EXTERIOR CLOSURE

Once the home has been set in place and properly supported, aligned to allow for proper operation of doors, windows, etc., and all utility cross connections have been completed, the exterior closure process can begin. Through this process the exterior coverings are completed providing a high degree of weather and vermin resistance. Any gaps, which remain along the mating surfaces of the home, must have been shimmed and sealed before the coverings are applied. Failure to seal these spaces will result in air infiltration and higher energy usage.

6-2 HINGED ROOF KEYSTONE INSTALLATION

Homes having a hinged roof, which was deployed when the home sections were being set in place on its foundation, will need to be closed along the ridge by installing the keystone assembly along the ridgeline. Any hinged or ship-loose eave assemblies will also need to be installed.

Installing the keystone requires that the two sides of the roof opening be on the same level. Check for level across the keystone opening from truss header to truss header prior to keystone application (See Figure 6-1). If the line between the trusses is not level, the set of the home will need to be adjusted before continuing.

To assure a continuous rise from the truss to the keystone, affix a temporary block of 7/16 inch OSB to the upper end of each keystone section (See Figure 6-2). Place a level or other instrument with a straight edge on top of the roof decking just below the header of the hinged roof section and on top of the OSB block. Adjust the keystone up or down until the upper edge of the keystone is in the same plane as the top of the truss. Fasten the keystone bottom rail to the truss header using No. 8 x 3" screws 15 inches o.c., 10d common nails 13 inches o.c., or SENCO KC27 nails 13 inches o.c. The truss top chord and the 2 by block in the Keystone do not need to align; however, the 2 by blocks in the Keystone sections need to align reasonably well across the roof peak to facilitate their strap interconnection (See Figure 6-2). The top edge of the truss header and the top edge of the 1 by member along the side of the Keystone must be in the same plane to avoid an offset in the roof sheathing. After the keystone sections have been attached to the truss headers, shimming may be required to connect the keystone halves**.**

IMPORTANT: Do not attach the two halves of the keystone together until each half has been attached to the truss header.

If shimming is needed place shims approximately 6 inches long and at least as deep as the Keystone top rail, between keystone sections along the ridge at the block locations in line with the truss top chords and in the center of the space between them. As an alternate the space may be shimmed solid with long sections of material (See Figure 6-3). The maximum thickness of the shims at any location is 1". After shims are in place, connect the keystone halves together using 10d nails, SENCO KC27 nails, or No. 8 x 3" screws. Maximum fastener spacing for nails is 13" o.c. and 15" for screws. Adjust nail and screw lengths according to shim thickness and application angle.

After the keystone halves have been fastened together, attach a 1 1/2 " x 12" 30 ga. galvanized strap centered on keystone assembly and fasten with (4) 1 1/8" x 16 ga. staples at each end and into 2-by member. Apply straps 48" O.C. maximum. Extend the fascia boards at the gable ends to complete the installation.

Place roof decking over keystone sections and fasten in place using narrow crown (7/16") 15 gage staples 2" long 4 1/2" o.c. along the edges and 8 1/2" o.c. in the field. Decking should overlap truss header by 1/2" to 1". After decking is fastened in place, cut out the area for the ridge vent. From the peak, the cut should not extend down any more than 1 1/2" past inside edge of the keystone top rail on each side of the peak. This will provide the correct opening for the ridge vent to be installed later.

6-3 EAVE CLOSURE

Carefully fold down the hinged eave, as it applies, and fasten it to the exterior wall as shown in Figure 6-4. Where the eave, or lower portion of a double gable, is a ship loose assembly install it as shown in Figure 6-5. Once the roof deck has been completed at the eave, additional underlayment and shingles must be installed to complete the weather resistance of the roof. Install the fascia and ventilated soffit as need to complete the installation as shown in Figure 6-6.

6-4 ROOF COVERING

In certain areas of the roof the shingles may have been secured with nail on strips to protect the shingles from the affects of transportation. These strips must be removed and the holes created by the fasteners filled with asphalt plastic roof cement.

Once the roof deck has been completed additional underlayment and/or shingles must be installed to complete the weather resistance along the hinge liner of a hinged roof, at the lower section of a double gable, and at the roof ridge interconnection by following the shingle manufacturer's recommendations printed on the shingle wrapper. (See Figure 6-7 and 6-8). Remember, the lower edge of the up slope underlayment must over lap the upper edge of the down slope underlayment by at least 6 inches.

The asphalt saturated organic felt shingle underlayment must conform to ASTM D 4869 or be a listed alternate. Both the underlayment and the shingles must be installed and fastened following the directions printed on the shingle wrapper. Asphalt plastic roof cement and asphalt lap cement must conform to ASTM D 4479 or ASTM D 3019 respectively.

Where the roof venting is to be achieved through the application of a ridge vent installed along the fixed ridge or on the Keystone; the vent material will need to be installed during the installation of roof covering. A minimum 1 1/2 inch gap has been left on each joining roof section along the centerline of the home. Ensure that the opening is free of roofing paper and shingle material that would block airflow if left in place. (See Figure 6-9)

Install the top courses of shingles up to the gap and install the ridge vent over the shingles making sure to center the vent along the ridge line of the home (See Figure 6-10). The vent material is installed over the 1 1/2" wide opening on each side of the Keystone center members with 12 inches extending past the opening on each end. The vent material along the roof ridge is then covered with ridge cap shingles and this entire assembly is nailed to the sheathing with the included 2 1/2 inch galvanized steel roofing nails (Smart Nails) with a 0.125 inch diameter shank and 0.395 inch diameter by 0.015 inch thick head. The nails are spaced 5 inches on center, two nails per ridge cap shingle, unless more nails are specified by the shingle manufacturer. Do not drive nails home. Leave at least a 3/4 inch space between the ridge cap shingles and the roof shingles. Nail heads shall be covered with asphalt plastic cement. The vent ends are left open. Shorter lengths of the vent material are joined by caulking and butting the ends.

6-5 TRUSS WALL SUPPORT FOR HINGED ROOFS

After the hinged roof has been raised and set in place, insert the gable truss wall support framing into the opening in the truss as shown in Figure 6-10. Slide the side supports outward until they tighten against the truss framing or outlookers and fasten in place using (2) #8X3" screws to fasten the top of the support to the outlookers, and (1) #8X3" screw between each vertical member to fasten the bottom of the support to the truss. Insert the center support into the space between the unit sections, sliding it downward until it makes contact with the truss framing. Fasten the support in place using #8X3" screws completing the truss wall, which provides a nailing surface for the exterior sheathing which in turn supports the siding.

Before fastening the sheathing to the truss wall, apply a 1/4" bead of PVA adhesive to the surface of all framing members in the truss wall. Fasten the sheathing in place using 8d nails or 7/16" crown,1 1/2" 16ga staples 6" O.C. along the edge, and 12" O.C. in the field. This application will promote proper load transfer and siding support.

6-6 BOTTOM BOARD CLOSURE

The underside of the manufactured home is covered with a closure material commonly called bottom board. This material is usually a reinforced paper product, a laminated plastic product or a woven plastic product. It encloses and protects the in-floor plumbing, electrical, mechanical and thermal systems of the home as well as guarding against the entrance of rodents. This covering must be inspected for any loosening or areas that has been damaged or torn in transportation or the installation of the home on its supporting system. This covering must be inspected for any loosening or areas that have been damaged or torn in transportation or during the installation of the home on its supporting system. Any missing insulation must be replaced prior to the repair of the bottom board.

To repair a hole or tear in the bottom board, cut a piece of like or equal material that is 4 inches larger than the widest point of the hole or tear. Spray both the patch and the area around the hole or tear with a high tack spray adhesive. Let the spray "air" for a short time as directed by the spray manufacturer and then apply the patch

over the affected area so that there is a 2-inch overlap at any edge. Smooth the path firmly in place to insure full contact.

To repair or tighten the fit around a pipe penetration in the bottom board, cut a piece of like or equal material approximately 6 inches wider than the pipe in all directions. Cut a hole in the center of the patch that exactly matches the size of the pipe. If the patch will not slip over the pipe, cut a slit in the patch from the center to the outer edge so that it will slip around the pipe. Spray both the patch and the area around the pipe with a high tack spray adhesive. Let the spray "air" for a short time as directed by the spray manufacturer and then apply the patch over the affected area. Smooth the patch firmly in place to insure full contact.

6-7 EXTERIOR SIDING CLOSURE

The home may have one of many exterior finish treatments. These treatments vary from vinyl lap siding, vinyl vertical panel siding, wood lap siding, wood log siding or wood/hardboard panel siding. Follow the instructions of the siding manufacturer for installation. All joints and seams in the exterior wall coverings that were disturbed during the location of the home must be made weatherproof. Close-up strips and trims applied to wood or wood fiber siding must be sealed with exterior sealant to prevent water infiltration. Any polyethylene close-up material, other than house wrap, will need to be removed from the ends of the home.

Fastener holes in the siding left after the removal of transit materials must be sealed with a high-grade silicone caulk. Holes in the rood covering left after the removal of transit materials or that occurred during the delivery to the home site or in the installation process must be made weatherproof and sealed with sealant or other material that is suitable for use with the roofing in which the hole was made.

6-8 INTERIOR CLOSURE

All the materials necessary to complete the interior closure were provided with the home when it was delivered to the manufactured home dealer. These materials match the decor of the home and can be easily identified by matching the molding and/or paneling with the materials installed by the manufacturer.

Wall coverings provided to complete the interior finish must be applied using a polyvinyl acetate (PVA) adhesive and 1 1/2 inch long nails, staples, or screws placed 6 inches o.c. on the edges and 12 inches in the field.

Figure 6-11 illustrates the various shapes of moldings provided with the home and their typical installation locations. Before installing moldings along the mating line of the exterior walls and ceilings, make certain that all the gaps are tightly filled with insulation or caulking material.

Moldings may be stapled or nailed in place. Cover the staple and nail holes with color coordinated putty (not supplied by the manufacturer).

Before extending the carpet and pad across the center line of the home, make certain that the floors are even and that any gaps have been tightly filled with insulation or other caulking material.

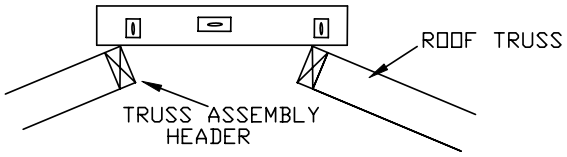

LEVELING THE PEAK

FIGURE 6-1

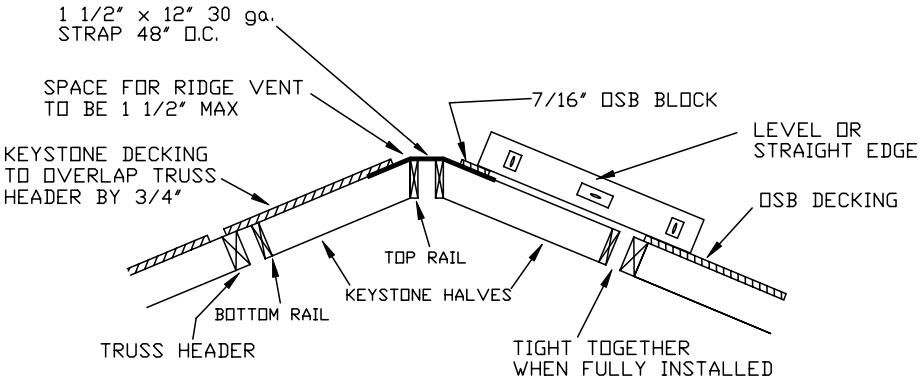

TYPICAL ALIGNING OF THE KEY STONE

FIGURE 6-2

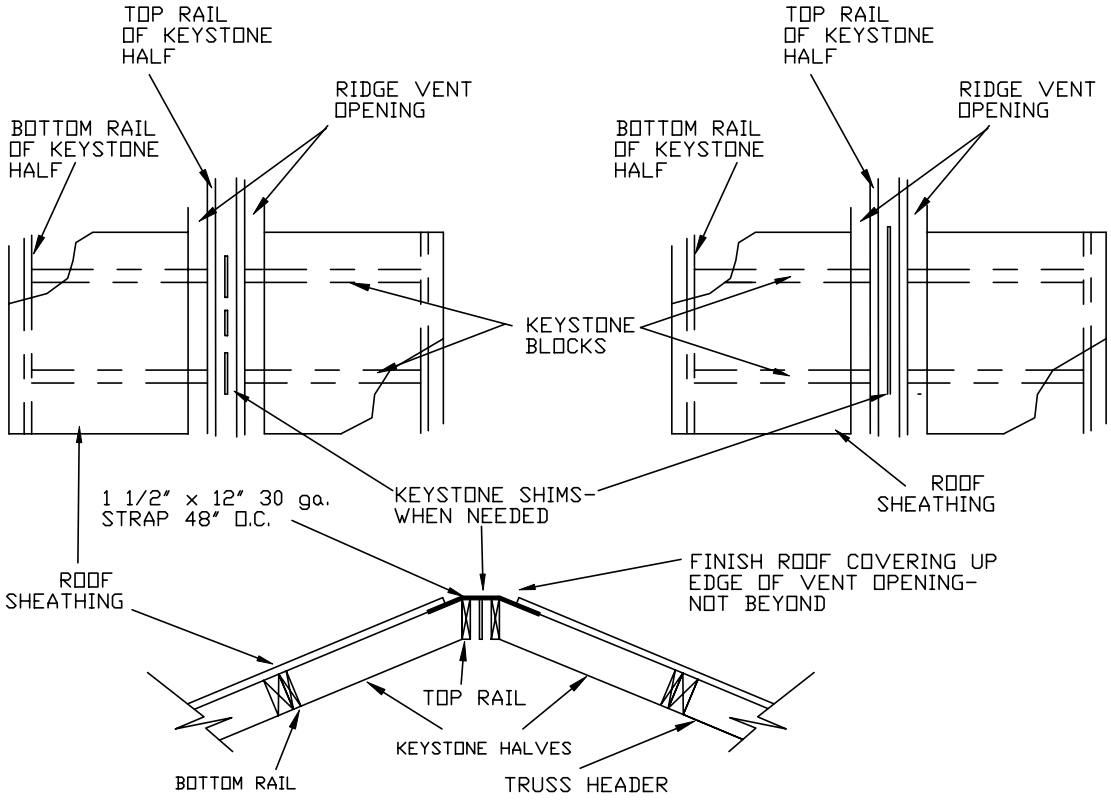

TYPICAL KEYSTONE SHIMMING

FIGURE 6-3

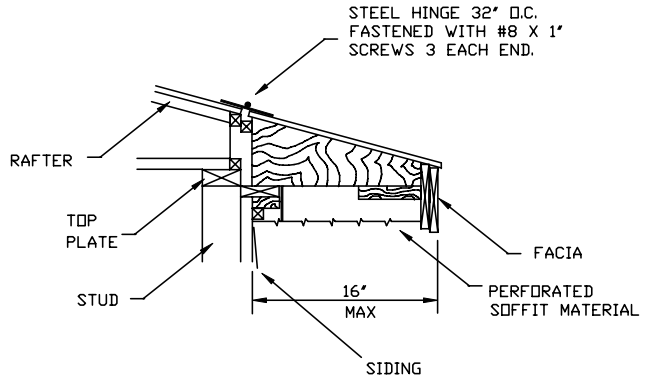

TYP. 16" HINGED EAVE.
WIND ZONE 1

FIGURE 6-4

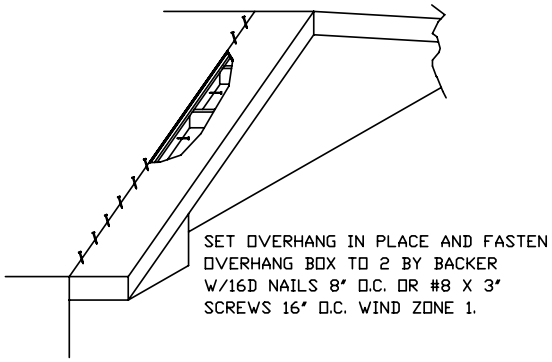

TYPICAL SHIPLOOSE OVERHANG

FIGURE 6-5

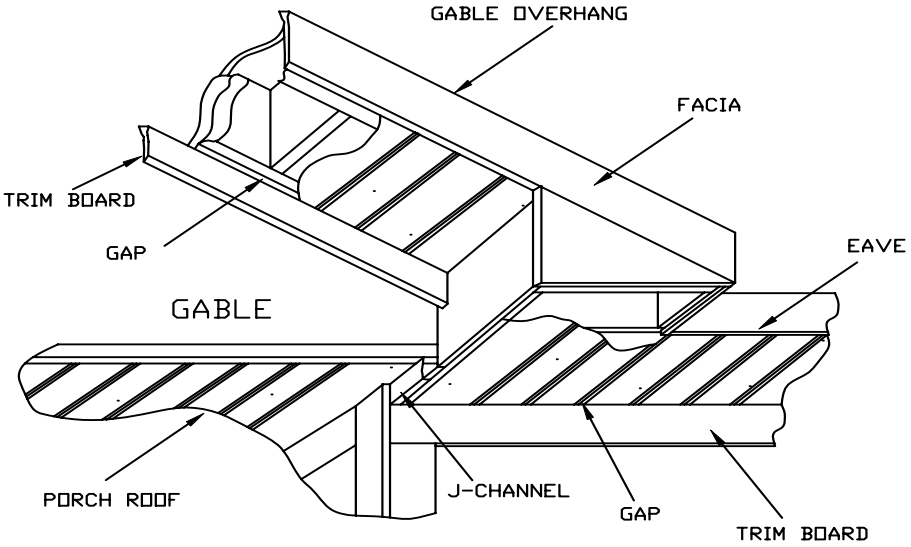

COVER OVERHANG WITH FELT PAPER AND MASTIC, THEN FINISH SHINGLING ROOF. PUT SOFFIT EDGE IN GAP ABOVE TRIM BOARD AND PUSH INTO PLACE BEHIND FACIA. NAIL SOFFIT IN PLACE 8" O.C. AT FRONT AND BACK. CUT TO FIT SOFFIT PIECE FOR EAVE AND OVERHANG. CLOSE GAP BETWEEN EAVE AND PORCH OVERHANG WITH A PIECE OF J-CHANNEL CUT TO FIT.

TYPICAL FINISHED OVERHANG

FIGURE 6-6

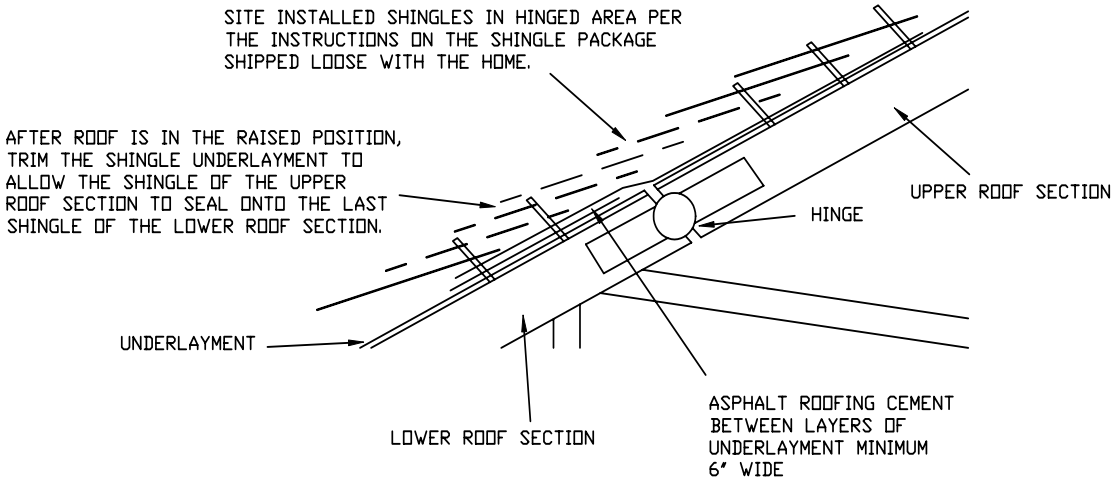

TYPICAL SHINGLE PLACEMENT AT HINGE

FIGURE 6-7

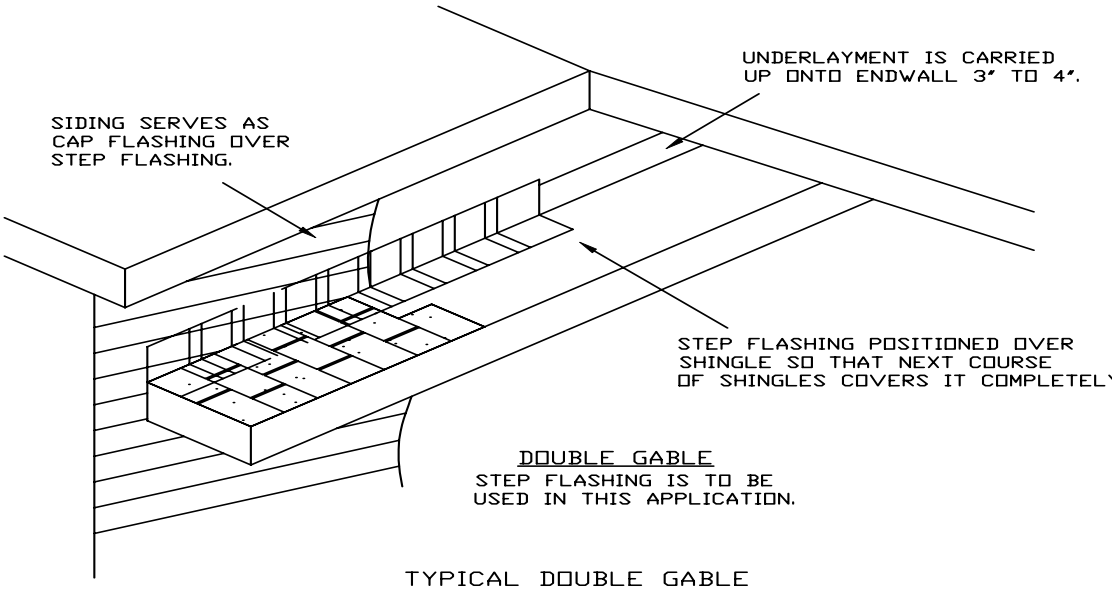

TYPICAL DOUBLE GABLE

FIGURE 6-8

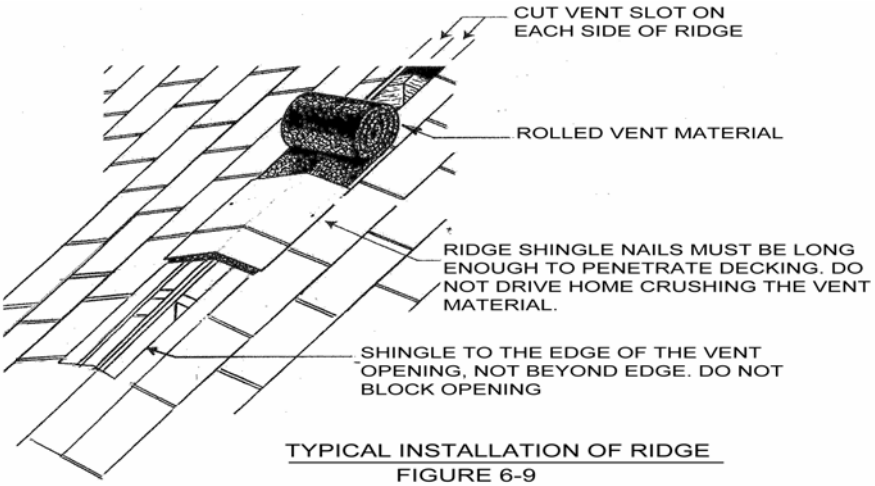

TYPICAL INSTALLATION OF RIDGE

FIGURE 6-9

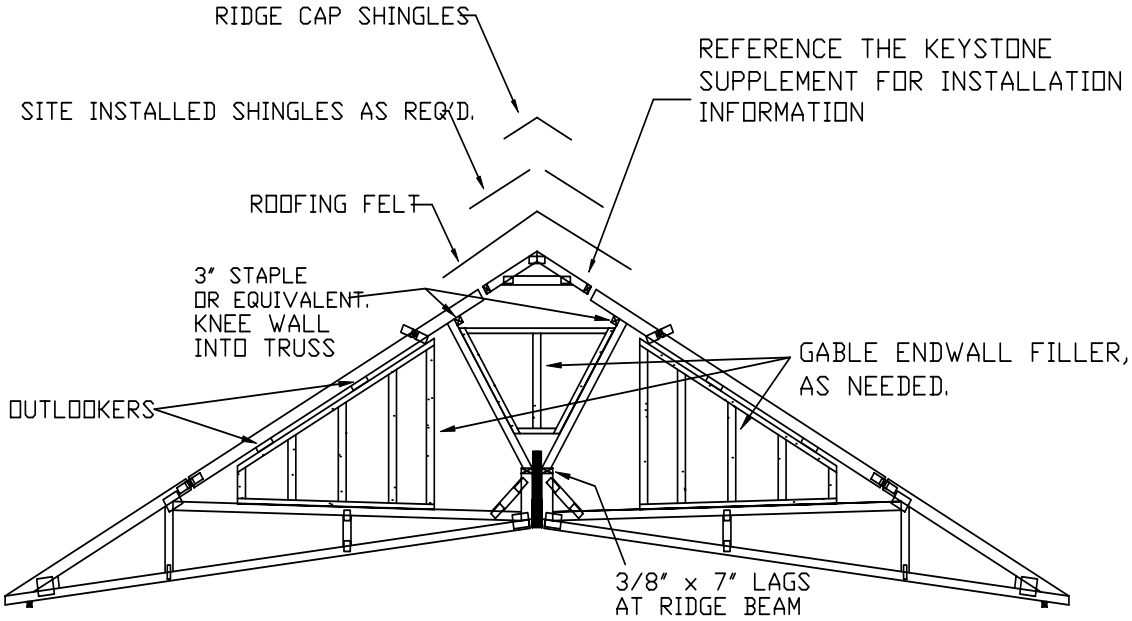

TYPICAL ENDWALL CLOSE-UP

FIGURE 6-10

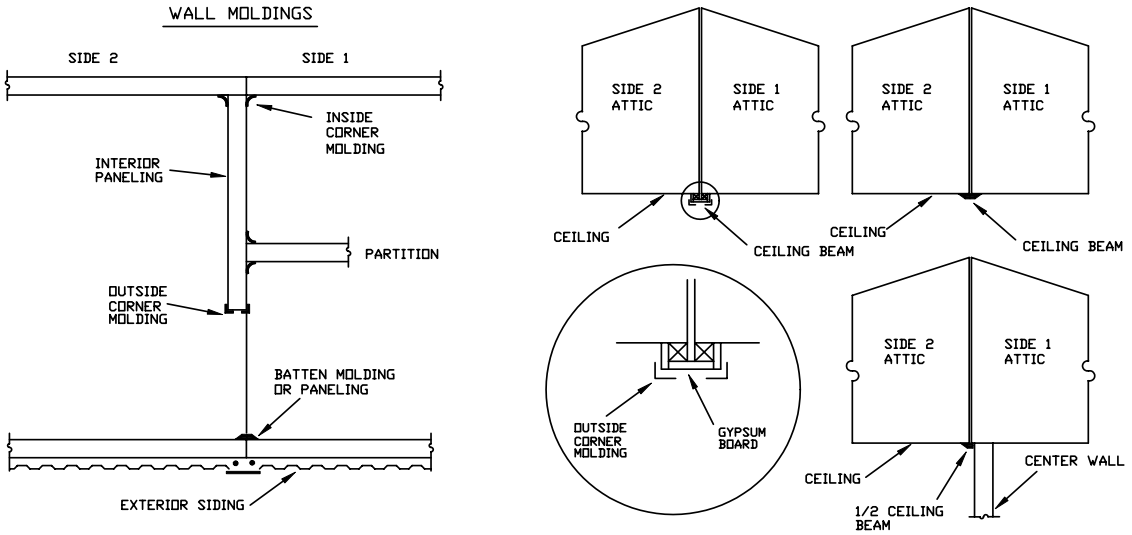

TYPICAL CEILING MOLDINGS

FIGURE 6-11

Utility Connections

7-1 GENERAL

Where the LAHJ and the utility services are available the LAHJ and each service company must be consulted before connecting the manufactured home to any services; where no LAHJ exist and utility services are available, the utilities must be consulted before connecting the manufactured home to any utility service; and where no LAHJ or utility services are available a professional be consulted prior to making any system connections.

Before leaving the manufacturing facility, the gas, water, and drain line systems of the home were tested for tightness. In addition, the electrical system has been thoroughly tested. However, prior to connecting these systems to their supply or sewer, another test should be conducted to ensure that these systems are functioning properly. Additionally, all fuel gas system piping should be examined for damage, which may have occurred in transit or on the dealer's lot.

All connections and the testing of these systems must be performed by qualified personnel familiar with local requirements. It is nevertheless highly recommended that the installer makes personal inspections, particularly of any exposed water or drain line connections for leaks, inside the home and underneath the home, and that the installer confirms that the electrical system has been properly grounded through the 4-wire feeder as described in the Electrical Systems section of this instruction.

It must be possible to gain access to all utility connections through removable sections of the skirting or through access doors.

7-2 WATER SYSTEM

The water distribution system of the home has been equipped with a 3/4 inch threaded inlet connection. The location is marked on the side of the home with a tag stating "Fresh Water Connection." When connecting the site water supply to this connection, care must be taken to ensure that the threads and inside of the pipe are clean and clear of any obstruction which may have occurred while the home was in transit or on the retailer's lot.

This system was designed for a maximum water inlet pressure of 80 pounds per square inch. Should the home be located in an area where the water pressure exceeds 80 pounds per square inch, a pressure-reducing valve must be installed. In addition to the pressure-reducing valve, if required, a full flow shut-off valve must be installed on the main feeder line adjacent to the home (See Figure 7-1). This valve must be either a full flow gate or ball valve with threaded or solder joints.

It is recommended that a check valve be installed on the water inlet to prevent water system drainage in the event of a loss of water pressure from the source. Such pressure loss could cause the water heater to drain, exposing the heating elements of electric water heaters causing them to fail.

CROSSOVER CONNECTION

When the home sections are brought together, the water line crossover connections will need to be completed. To gain access to the water piping, simply remove the access panels located under the home (see figure 7-2) and fold the insulation back, exposing the water lines. Connect the piping, through the prepared opening in the perimeter rail, by screwing the fittings together, hot to hot and cold to cold. Red colored pipe or red text on the piping identifies the hot. When the connection has been completed, test the system for leakage (see paragraph 7-3). Once certain the connections do not leak, unfold the insulation and extend it through the crossover opening, making certain that the area between the piping and the bottom board is fully insulated to prevent the cold temperatures from reaching the piping. Complete the installation process by reinstalling the access panels, making certain they are tightly in place.

WATER HEATER DRAINS

All water heaters have an approved, fully automatic valve designed to provide temperature and pressure relief. These valves are provided with a drain that discharges below the home. The opening in this drain should be inspected to ensure that it is clear of any obstruction, which may have occurred while the home was in transit, or on the retailer's lot. Where the home is to be installed on a basement, or enclosed crawl space, **you** must make provisions to direct any discharge to the sump or through the foundation wall.

Additionally, make certain that the drain for the water heater drip pan does not terminate under the home. Extend the drain line from the water heater drip pan through the wall to the exterior of the crawl space.

Terminate the line between six and 24 inches above grade. (See Figure 7-3). Make the termination point rodent proof.

WATER FREEZE PROTECTION

In areas subject to freezing temperatures, all exposed water supply lines, pressure reducing valves, and pipes in water heater compartments with non insulated exterior doors must be protected by wrapping with insulation and by using one or more listed electric heating cables. A receptacle outlet has been provided on the underside of the home in the area of the water inlet for the express use of the heating cables.

CAUTION: Only heating cables listed for use with manufactured homes may be used. They must be installed in accordance with the terms of their listings and installation instructions. Failure to follow these instructions could result in an electrical hazard or short circuit, which could cause a fire.

7-3 WATER SYSTEM TESTING

Testing the water distribution system can be performed by subjecting this system to a hydrostatic or pneumatic pressure of 100 pounds per square inch for 15 minutes without loss of pressure. Before testing, close all water faucets, spigots, and toilet-tank float valves. Conduct the testing as follows:

Hydrostatic (system filled with water):

1. Confirm that the water heater tank is full of water.
2. Connect a hydrostatic pump, valve, and gauge to the location shown in Figure 7-1. Pressurize the system with water at 100 psi, and then isolate it from the pressure source bleeding all air from the highest and farthest points in the system.
3. Monitor the pressure for at least 15 minutes.
4. If the pressure drops below 100 psi, locate and correct all leaks by cutting out and discarding bad pipe sections or joints and installing new pipe or joints with couplings.
5. Repeat the test until all leaks have been eliminated.

Pneumatic (system dry):

1. Bypass the hot water heater by disconnecting the hot outlet and cold inlet water lines from the water heater and joining them together. This will protect the hot water tank from damage and protect those involved in the test from possible injury.
2. Connect an air pump and pressure gauge to the water inlet, pressurize the system to 100 psi and isolate the pressure source from the system.
3. Monitor the pressure for least 15 minutes. If the pressure drops below 100 psi, locate all leaks by applying soapy water to the connections and looking for bubbles.
4. Correct any leaks by cutting out and discarding bad pipe sections or joints and installing new pipe or joints with couplings.
5. Repeat the procedure until all leaks have been eliminated.
6. Reconnect the water heater and the water supply.
7. Rinse the soapy water from the water piping with fresh water.

7-4 FREEZE PROTECTION FOR UNOCCUPIED HOMES

If the home is to be left unheated in cold weather, protect water lines from freezing as follows:

1. Turn off the water supply and disconnect the water supply inlet.
2. Turn off the water heater; if necessary, attach a hose to the valve to direct water away from under the home, open the drain valve and drain the tank completely.
3. Open all faucets throughout the home (including the laundry area if plumbed, and any exterior faucets) and let them drain completely.
4. Flush toilets and drain water tanks completely.
5. Close all water faucets with the exception of one.
6. Connect a maximum of 30 psi air supply to the water inlet connection using a low pressure compressor.
7. With the air supply on the system, open one faucet at a time throughout the home.
8. After the entire system has been drained of all water, disconnect the air supply and close the water inlet valve.
9. Pour antifreeze solution into all drain traps, including sinks, tubs, and toilets. Be sure that the antifreeze is safe for the fixtures and P-traps.

10. Do not overlook the laundry area if plumbed, and the exterior faucet when installed.

CAUTION: Only use pneumatic (air) testing when hydrostatic testing is not practical. Air under pressure is explosive. Exercise extreme caution and notify all site personnel of the test. Wear protective eyewear and take precautions to prevent impact damage to the system while the test is in progress. Do not pneumatically test CPVC systems.

NOTE: When pressurizing the water system, connect the pump to a location above a closed shut-off valve so as not to introduce pressure into the municipal water supply.

7-5 WASTE DRAINAGE SYSTEM

The waste drainage system in the home terminates in a standard 3-inch waste connection, which is located underneath the home often in the area of the bathroom. Depending on the design of the home and the number of bathrooms, a certain amount of site work may be necessary to complete the connections and bring the drain outlet to one point. Refer to the illustration provided in the supplemental addendum.

When connecting the drains into one outlet or routing the unit drain to the site drain, the system must be properly assembled, sloped, and supported. It is recommended that all the piping be cut and pre-assembled to make certain of fit prior to final assembly. A slope of 1/4 inch per foot of drain length is required for the drain system. However, where it is impractical due to the structural features or arrangement of the home, a slope of not less than 1/8 inch per foot is allowable providing there is a full-size clean out installed at the upper end. This reduced slope applies only to the piping, which brings the unit drain to the building site drain.

The drainage system must be properly supported to ensure proper slope and to eliminate any damage to the system or the possibility of a low spot developing which could cause the waste to back up. The supports must be located a maximum of 48 inches on center. Straps used to support the drain from the floor of the home must be at least 3/4 inches in width, .020 inches in thickness, and must be made to resist corrosion. Other approved hangers and supports may also be used in accordance with their listings (See Figures 7-4, 7-5, and 7-6, and any instructions which may have been supplemented into the rear of this manual).

WASTE DRAINAGE SYSTEM TESTING

Just prior to the connection of the home drainage system to the site drain, the system should be plugged and flooded to test for leaks which may have developed in the system due to in transit vibrations, movement during installation, or in the site installed piping. The procedure for this testing is as follows:

- With the drainage system outlet tightly capped and the tub and shower drains plugged, fill the system with water until the toilet bowls are full to the bottom of the rim. The water must stand without the level falling for 15 minutes.
- Fill fixtures, which are higher than the toilet bowl (lavatories, sinks, etc.) with water. Check these fixture connections for leaks as the water is allowed to flow through the system as the drains are opened.
- Any leakage noted during these tests should be isolated, corrected, and retested prior to home occupancy.

The main drain line must be connected to the sites sewer hookup using an elastomeric coupler or by other methods acceptable to the LAHJ.

FREEZE PROTECTION

In areas subject to freezing temperatures, all exposed drain lines should be protected by wrapping with insulation and by using one or more listed electric heating cables where insulation alone is inadequate. In addition the area between an in-floor p-trap and the bottom board must be checked to make certain they are well insulated and covered.

CAUTION: Only heating cables listed for use with manufactured homes may be used. They must be listed for use with the type of material used in the drainage system and must be installed in accordance with their installation instructions. Failure to follow these instructions could result in an electrical hazard or short circuit, which could cause fire.

7-6 GAS SYSTEM CONNECTION

The gas piping system in this home is designed for a pressure not exceeding 14 inches water column (1/2 psi) and not less than 10 inches water column (3/8 psi).

On sectional homes, which incorporate gas appliances in more than one section, the gas crossover line is provided between the home sections. This crossover line is located below the floor structure at the centerline between the sections. It is quipped with an approved metal connector. After the dust covers have been removed, the crossover connector is installed to bring the piping in both sections together. (See Figure 7-7).

GAS CONNECTION

If the home requires natural or liquid petroleum gas (LPG, also known as propane) for water or space heating, cooking or other appliances, follow the procedure described below:

1. Assure that all exhaust vents on gas-fired equipment are securely connected and that roof jacks and stacks have not come loose during transit and they are properly installed.
2. Review each appliance manufacturer's instructions before the home is connected to the gas supply. Most gas appliances are typically configured to operate on natural gas. If the gas supply will be LPG, consult the appliance manufacturer's instructions to determine what changes need to be made. For homes located above 3,000 feet, appliances may require a different orifice.

GAS SYSTEM TESTING

The gas piping system was tested at the time of manufacture, however, it is essential that it be inspected and tested at the site. For leaks that may have been caused by in-transit vibrations or physical damage that may have occurred after the home completed the manufacturing process.

CAUTION: Do not apply more than the specified pressure as damage to gas valves and/or regulators may result.

The piping system must be tested with the appliances connected and with the appliances isolated. Consult with the LAHJ for any additional testing or start-up requirements.

Before testing is begun, the temperature of the ambient air and the piping should be approximately the same. Conduct the tests when and where air temperatures will remain constant.

Piping only test (all appliances isolated):

1. Isolate all appliances from the system by closing all appliance shut-off valves.
2. Attach to the home's gas inlet a mercury manometer or slope gauge calibrated in increments of not more than 1/10 lb.
3. Pressurize the system with compressed air to three psi and isolate the pressure source from the system.
4. Monitor the pressure for at least 10 minutes.
5. If pressure drops below three psi, check for leaks by applying a non-corrosive, ammonia-free gas leak detection fluid to the joints at all valves, appliance connections, and crossover connections (do not use dish washing detergents, soap, or other household chemicals). If bubbles form, tighten the connection and recheck.
6. If leaks persist, replace defective pipes or fittings with sound material and retest.
7. Release pressure and open all appliance valves. Rinse with water to remove leak detection fluid.

Entire system test (with appliances):

1. Close all gas equipment controls and pilot light valves according to the individual gas equipment manufacturer's instructions.
2. Assure that gas shut-off valves for all gas equipment are in the open position.
3. Attach to the home's gas inlet a pressure gauge calibrated in ounces.
4. Pressurize the system with air to six to eight ounces (3/8 to 1/2 psi, or 10 to 14 inches of water column).
5. Check for leaks as described above in step 4 of the Piping only test. Replace defective pipes or fittings with sound material and re-test.
6. Thoroughly rinse all tested connections with water to remove leak detection fluid.

NOTE: Prior to making connection to site supply, gas inlet orifices of furnaces, water heaters, and other appliances must be checked to ensure they are set up for type of gas to be used – L.P. (liquefied petroleum) or natural gas. The gas pressure should not exceed 14 inches water column (1/2 psi).

The gas connection to the gas supply should be made by an authorized representative of the gas company (See Figure 7-8).

START-UP PROCEDURE

The gas utility service should perform the following service once the gas, natural, or LP, is connected:

- One at a time, opening the equipment shut-off valves,
- Light the pilot lights, when provided,
- Adjust burners and spark igniters for automatic operation, in accordance with each appliance manufacturer's instructions,
- Check the operation of the furnace and water heaters thermostats.

7-7 OIL SERVICE

Homes that are equipped with oil burning furnaces must have oil supply piping installed and tested on site by a qualified professional in accordance with NFPA 31, Standard for the Installation of Oil Burning Equipment, 2001 or the requirements of the LAHJ, whichever is more stringent The home manufacturer does not supply oil piping or tanks.

OIL CONNECTION

Consult the furnace manufacturer's instructions for proper pipe-sizing and installation procedures. Where piping is run through the bottom of the home, ensure all holes in the bottom board are sealed tight with foam, mastic, and/or tape specially made for that purpose and made rodent proof.

When equipping the home with an oil storage tank, comply with the following:

- Install the pipe with a gradual slope toward the fill end or drain plug (if so equipped) to facilitate pumping or draining of water and sludge.
- Provide a readily accessible approved manual shut-off valve at the outlet, installed to close against the supply.
- Equip the tank with an approved oil filter or strainer located downstream from the tank shut-off valve. Use a filter or strainer containing a sump with a drain to trap water.
- Equip under ground tanks with a filler neck extending one foot above grade and minimum 1 1/4 inch diameter vent pipe extending at least two feet above grade.
- Locate the tank to be accessible for service and inspection, and safe from fire and other hazards.
- Oil storage tanks and pipe installations should meet all applicable local regulations.
- In flood hazard areas, the oil storage tank should be anchored and elevated to or above the design flood elevation, or anchored and designed to prevent flotation, collapse, or permanent lateral movement during the design flood.
- Install tanks that feed vaporizing type oil furnaces so that oil flows by gravity. To achieve efficient gravity flow, make sure that the bottom of the tank is at least 18 inches above the furnace oil control level.
- Tanks for gun type oil furnaces (these furnaces include a fuel pump) may be installed above or below ground.

OIL SYSTEM TESTING

Before operating the system, fill the tank to capacity with the fuel to be burned and visually check all joints in the system for leakage. Replace (do not repair) parts that leak.

7-8 CROSSOVER DUCTS

There are two main types of duct crossover connections. Based on the location of the duct, follow the installation steps on the page indicated below:

- Under the floor
- In floor, through-the-rim joist

To prevent air leakage, seal all ductwork connections, including duct collars using one or more of the following materials:

- Galvanized metal straps in combination with galvanized sheet metal screws.
- For rigid air ducts and connectors, tape and mastics listed to UL 181A.
- For flexible air ducts and connectors, tape and mastics listed to UL 181B.

UNDER FLOOR FLEXIBLE CROSSOVER DUCT

When heating or cooling equipment is installed in the home, the flexible crossover duct is provided by the manufacturer. In all cases the crossover duct must be listed for exterior use.

There are four common configurations of under floor crossover ducts depending on the number of home sections and the furnace/air handler location. See Figure 7-11 through 7-14 to locate the appropriate figure.
For under floor flexible crossover ducts follow the steps below:

1. Locate the metal crossover collars (or plenum) connected to the main trunk duct (or furnace) under the home and remove temporary shipping protection.
2. Slide the crossover duct inner liner over the crossover collar/plenum as far as it will go. Temporarily fasten the inner liner in place with duct tape. Install a large nylon sip-tie over the inner liner just above the “ridge” around the crossover collar/plenum. Apply mastic completely over inner liner and collar/plenum (alternately, the mastic may be applied to the collar/plenum prior to sliding the duct inner liner over it).
3. Bring the duct insulation up over the zip-tie and above the homes bottom board into the floor cavity. Temporarily duct tape it against the base of the trunk duct/plenum.
4. Pull the crossover duct outer wrap over the top of the insulation and temporarily secure it to the trunk duct/plenum with duct tape.
5. Feel for the nylon zip-tie that was installed over the inner liner. Place another nylon zip-tie just under the first one to permanently secure the crossover duct insulation and outer wrap.
6. Trim the crossover duct to length such that the installed duct will be straight with no kinks or unnecessary bends.
7. Follow the same procedure (steps 1 through 5) to connect the opposite end of the crossover duct and any other crossover ducts.
8. Seal the joints between the bottom board and the crossover duct with foam or mastic.
9. Support the crossover duct(s) above the ground using nylon or galvanized metal straps and saddles spaced every 48 inches o.c. or less. Choose straps at least 1/2 inch wider than the spacing of the metal spirals encasing the crossover duct. Install the straps so they cannon slip between spirals. Secure metal straps with galvanized screws.
10. Where the in-floor flexible ducts connect to a termination fittings that are installed through the perimeter joist so that they align with like fittings on the other side of the mating line, a connection will not need to be made. Simply confirm that the gasket has been installed on one side or the other before the sections are brought together. (See Figure 7-9 & 7-10).

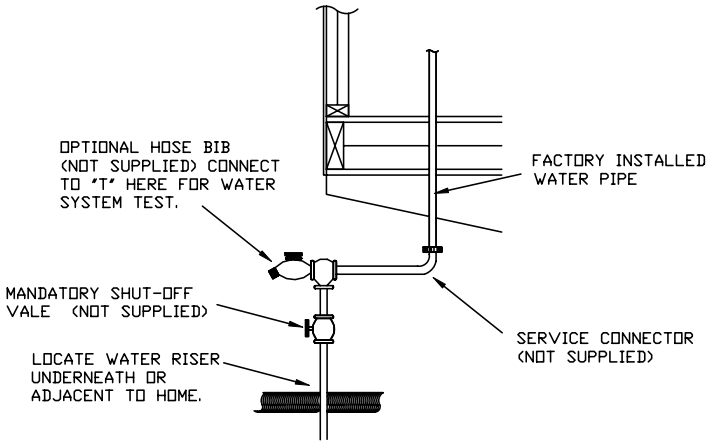

TYPICAL WATER SUPPLY LINE

FIGURE 7-1

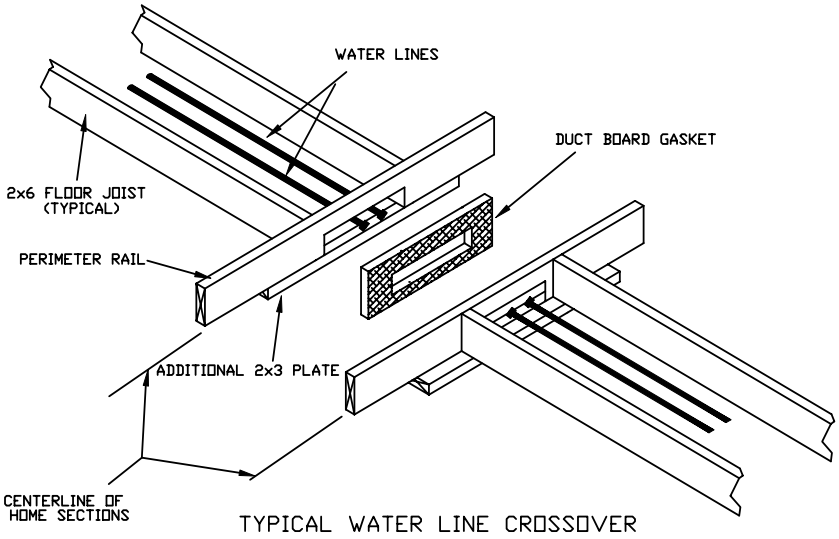

TYPICAL WATER LINE CROSSOVER

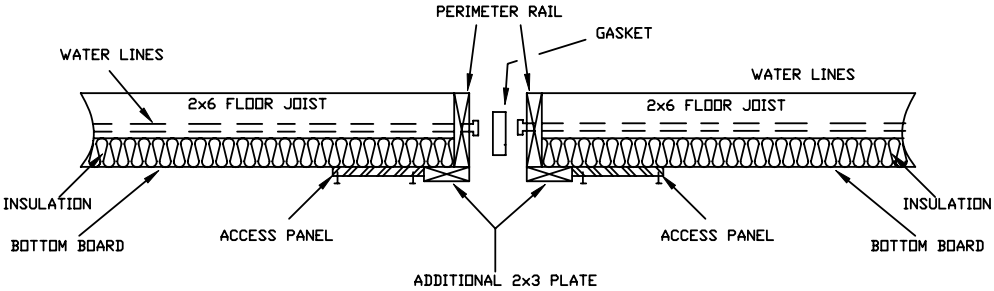

TYPICAL WATER LINE CROSSOVER

FIGURE 7-2

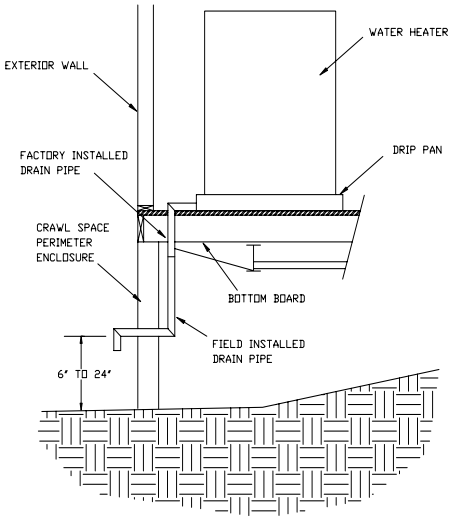

TYPICAL WATER HEATER DRAIN

FIGURE 7-3

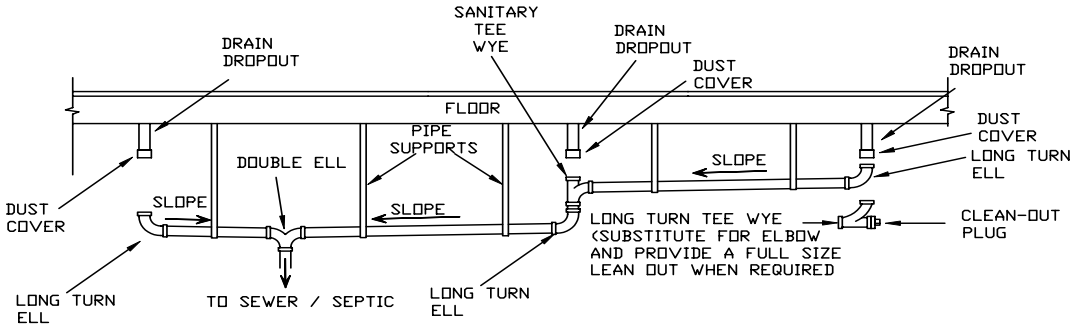

TYPICAL DRAIN CONNECTION

FIGURE 7-4

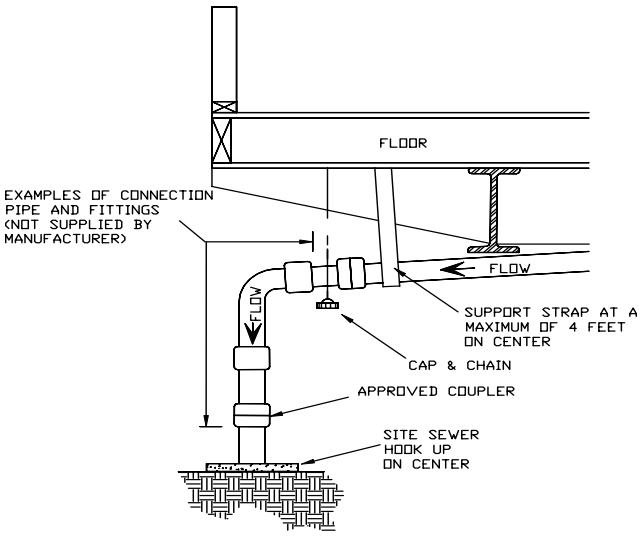

TYPICAL DRAIN CONNECTION

FIGURE 7-5

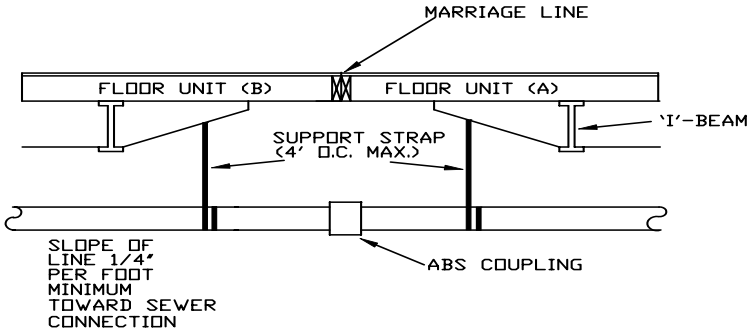

TYPICAL DRAIN CONNECTION

FIGURE 7-6

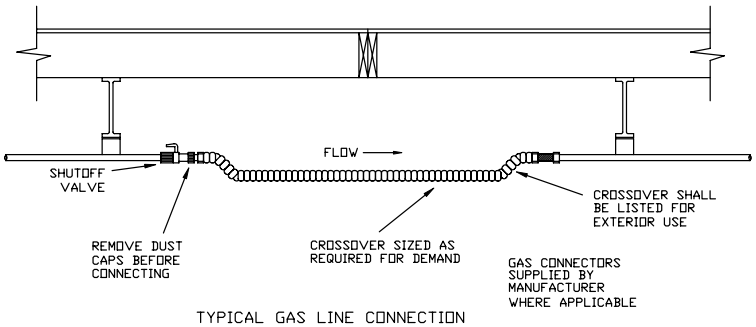

TYPICAL GAS LINE CONNECTION

FIGURE 7-7

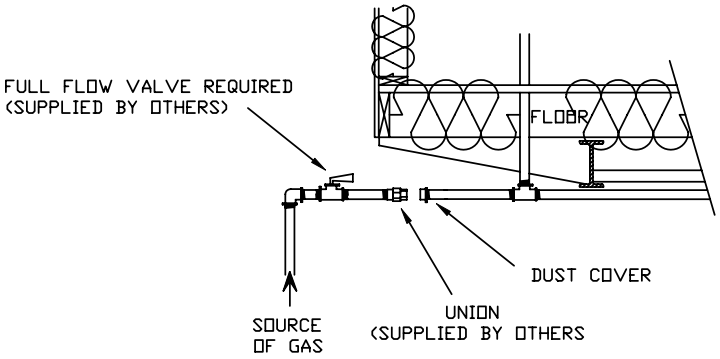

TYPICAL GAS CONNECTION

FIGURE 7-8

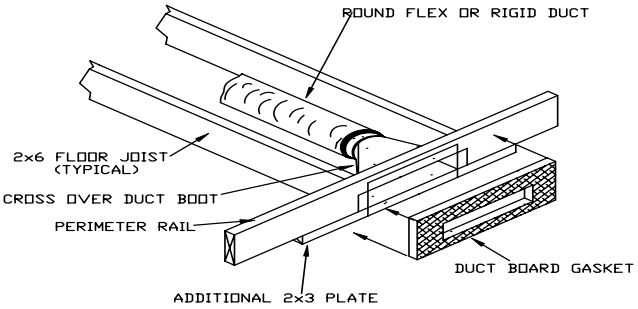

TYPICAL PERIMETER CROSSOVER

FIGURE 7-9

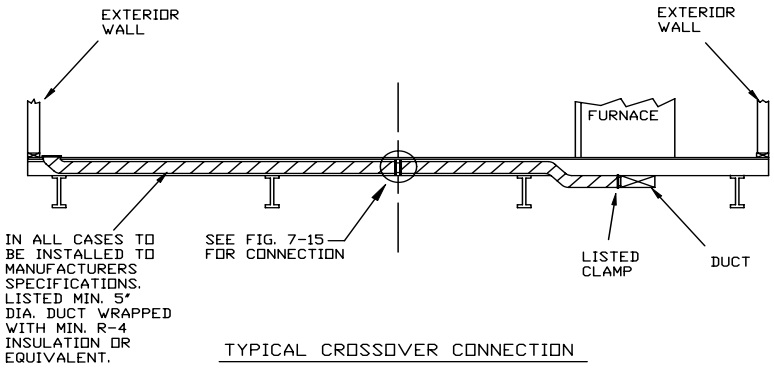

TYPICAL CROSSOVER CONNECTION

FIGURE 7-10

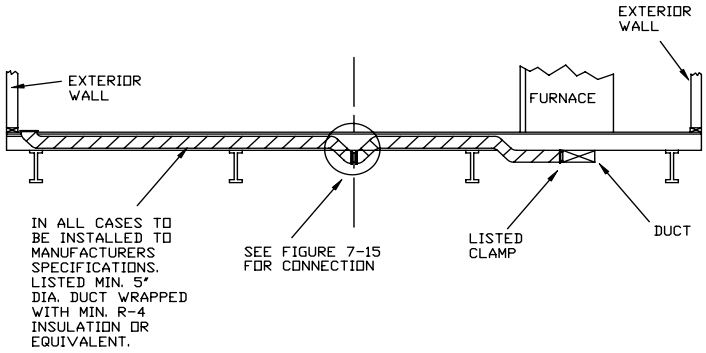

TYPICAL CROSSOVER CONNECTION

FIGURE 7-11

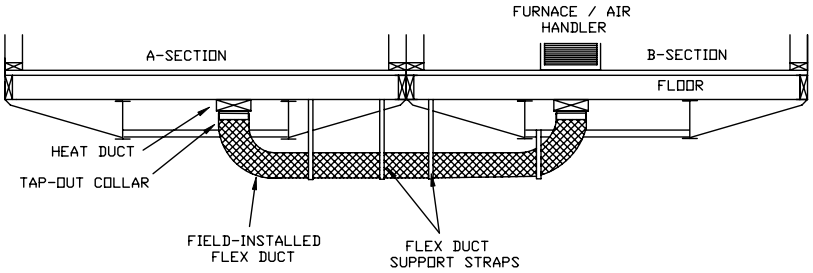

TYPICAL MARRIAGE LINE CONNECTION

(DUCT TO DUCT)

FIGURE 7-12

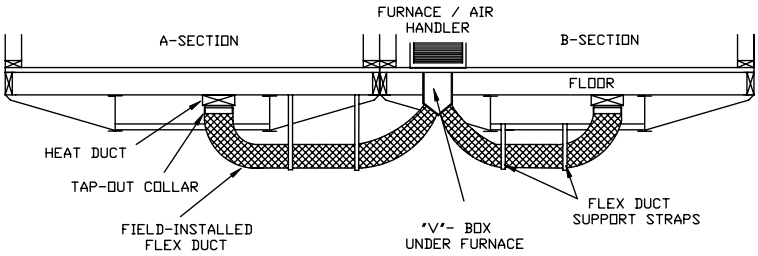

TYPICAL FURNACE CROSSOVER

(V-BOX TO HEAT DUCT)

FIGURE 7-13

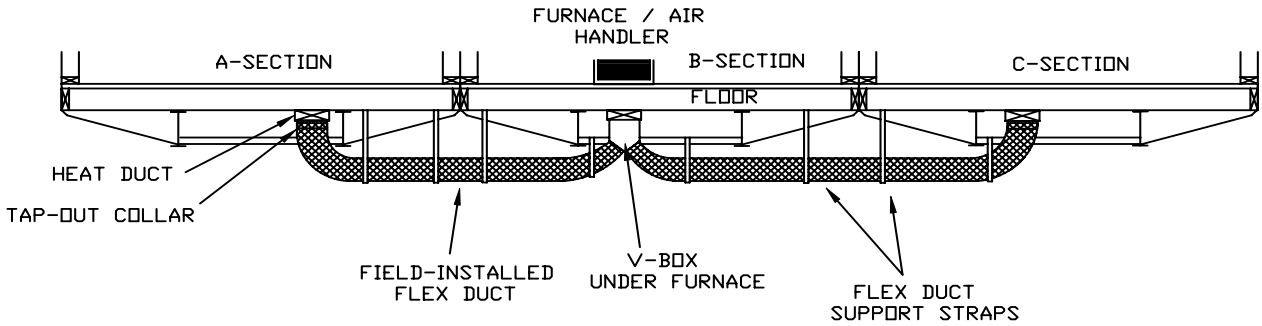

TYPICAL TRIPLE WIDE FURNACE CROSSOVER
("V"-BOX TO HEAT DUCT)

FIGURE 7-14

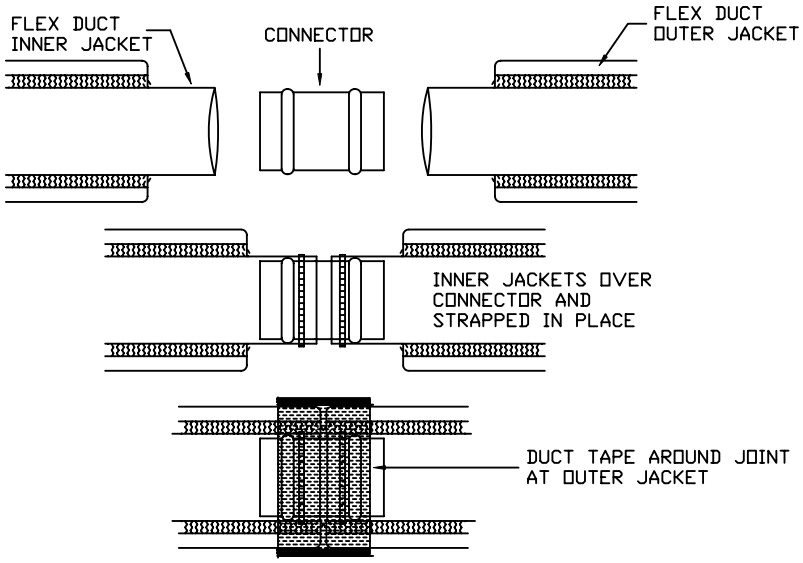

TYPICAL HVAC FLEX LINE CONNECTION

FIGURE 7-15

Electrical System

8-1 Electric System

The home is designed to be connected to an electrical supply source rated at 120/240 Volts, 3-pole, 4-wire, 60-Hertz having an insulated neutral. In making the feeder connections to this power source, it is extremely important that conductors of the correct size, insulation type, and material be used. If the conductors are incorrectly sized, the ampacity for that conductor may be exceeded resulting in a voltage drop within the home or an overheating of the conductor which will cause the circuit breaker to trip protecting the system from a short circuit.

Ampacity is the safe current carrying capacity of a conductor expressed in amperes. The greater the amperes flowing, the greater the heat build-up within the conductor. If the amperage is allowed to become too great, the conductor may become so hot that it will damage the insulation. Should the insulation be damaged severely enough that the individual conductors come into contact with one another, a short circuit will result which could cause a fire. To avoid the possibility of a voltage drop or short circuit caused by improper conductor sizing, refer to Table 8-1 for proper conductor sizing.

Before locating the home at a permanent site or park, make certain that sufficient power is available. Insufficient power will result in the improper operation of motors, appliances, and lights which will further result in a more costly electrical service. Proper performance of the home's electrical system depends on a full 120/240 volts of electrical power at amperage equal to the rating of the main circuit breaker located in the distribution panel within the home. The amperage rating of the disconnect circuit breaker located in the disconnect box outside of the home must also be equal to that of the main circuit breaker in the distribution panel.

It is also vital for the protection of the occupants of the home that it be properly grounded. The only safe and approved method of grounding the home is through the electrically isolated grounding bar located in the distribution panel which grounds all non-current carrying metal parts to the electrical system in the home to a single point. The grounding bus bar(s) may be located on either side of the panel box or split between the sides and hold(s) the bare copper grounding conductors only.

The neutral bus bar(s) may be located on both sides of the circuit breakers or be combined on either side or hold(s) only the white insulated conductors.

The grounding conductor of the entrance feeder connects the grounding bus bar to an electrical ground at the disconnect box (See Figure 8-1 & 8-2). For this reason the home must have a 3-pole, 4-wire feeder.

NOTICE: The Manufactured Home Construction and Safety Standards and the National Electrical Code prohibit connecting the grounding bar and the neutral bar together in the distribution panel. The ground and the neutral are insolated from one another. It is extremely important that the grounding conductor and the neutral conductor from the distribution panel in the home be connected together at the disconnect box located outside of the home (see Figures 8-1 & 8-2). For this reason, all four of the feeder conductors are absolutely essential (See Table 8-2).

WARNING! If the grounding conductor and the neutral conductor are not connected together at the disconnect box and then properly grounded to the earth as required by the national electrical code, the individual branch circuit breakers located in the distribution panel within the home my not function and a short circuit at any time could cause an electrocution.

8-2 ELECTRICAL CONNECTION

The electrical supply connection to the home may be made utilizing a raceway or buried cable. A raceway is provided from the distribution panel and is routed to the underside of the home. A junction box must be used to connect the home feeder raceway to the supply raceway beneath the home. This feeder installation must be in accordance with the National Electrical Code. The proper feeder conductor sizes and required junction box sizes are given in Table 8-1 and Figures 8-1, 8-2, 8-3, & 8-4.

The main distribution panelboard within the home has been sized for the electrical equipment and/or branch circuits that were installed during the manufacturing process as original equipment. Branch circuits for electrical equipment added to the home in the aftermarket such as air conditioning units, heat pumps and water pumps, as well as for ancillary structures such as porches, garages, workshops, barns, basements, etc. must originate at a power source outside the home.

WARNING! Do not install lamps (light bulbs) in the lighting fixtures that exceed the maximum wattage limit posted on or near the light fixture. Over lamping can cause an electrical shock or fire hazard.

CAUTION: If the home is equipped with an electric water heater, do not turn on the circuit breaker in the distribution panel until after the water heater has been filled with water. Energizing the circuit prior to filling the water heater will result in severe damage to the heating element within the water heater.

WARNING! It is essential for the safety of the installation personnel that the frame sections be bonded together prior to connecting and energizing the homes electrical system. Failure to complete this operation as the first step of the electrical installation could create an electrical shock hazard should the frame become energized from any source.

Bonding between sections of a home must be accomplished at set-up by connecting a No. 8 AWG bare copper wire between the chassis members using approved grounding lugs with bolts, star washers and nuts, or self-tapping screws shipped with the home. This connection is made at the rear of the home sections at the outrigger location. See Figure 8-5.

8-3 ELECTRICAL CROSSOVERS

Electrical crossovers for multi-section homes are located along the center line between the sections. These crossover locations can be distinguished by a number of tags and a locator drawing posted in the home. See Figures 8-6, 8-7 & 8-8 for typical crossover wiring and alternate crossover methods which may be encountered.

Most crossover connections are made with listed crossover connectors that do not require junction boxes (see figure 8-9). 240-Volt crossover connections are generally made in junction boxes along the centerline and above the bottom board.

8-4 TEST PROCEDURES

The electrical system should be tested to make certain there is no reversed polarity, open grounds, or short circuits in the system. Such tests should be performed after the home has been completely set up and assembled, all metal structural and trim pieces have been installed, and the internal electrical connections have been made. Test procedures are as follows:

CONTINUITY TEST

All exposed non-current carrying metal parts that may become energized shall be effectively bonded. A test to confirm this bonding should be made BEFORE the home is connected to its electrical service.

Perform the following checks for proper bonding or continuity using a continuity tester or equivalent (This tester typically is a small pen flashlight using two “AA” batteries and utilizing a long wire lead with an alligator clamp.)

1. Using the flashlight continuity tester, connect the alligator clip to a positive ground such as a metal screw head on a receptacle or switch plate and touch the body of the flashlight to each fixture canopy. The continuity light should light if each fixture is properly grounded.

2. Using the continuity tester:
   a) Check all appliances and vent fans. By touching the metal body of the flashlight to the appliance or fan and having the alligator clamp connected to a convenient ground, the light should come on if the appliance fan or fixture is properly grounded.
   b) Using the same procedure, check the bonding between the following:

      - Metal register boot and convenient ground (only with metal ducts),
      - Steel frame and metal roof,
      - Steel frame and metal exterior skin,
      - Steel frame and metal gas piping,
      - Metal fireplace and convenient ground,
      - Water heater and convenient ground,
      - Furnace and convenient ground,
      - Steel frame and metal EMT raceway to distribution panel where applicable.

NOTE: Bonding is not required on metal inlet of plastic water systems or on plumbing fixtures such as tubs, faucets, shower risers, and metal sinks when connected only to plastic water and drain piping. Any indication of an inadequate bond between any of the items listed above will require investigation and correction.

3. An additional check using the continuity tester should be conducted as follows:

    - With the main circuit breaker in the OFF position use the flashlight continuity tester, and connect the alligator clip to a positive ground. Turn on all light fixture and appliance switches including all fans and the furnace, and touch the flashlight probe to the neutral bar in the electrical distribution panel and each connected load. The continuity light should not light. If the continuity tester does light, it is an indication of an electrical short.
    - Should an electrical short to ground be indicated, the short must be isolated and corrected before connecting the power to the home from the source.

After the continuity test connect the home to its electrical service.

POLARITY CHECK

Using a polarity checker, plug into each AC receptacle in the home noting an indication of reversed polarity, open grounds, or shorts. Any reverse polarity, open grounds, or shorts, which are located, must be investigated and repaired. For electrical equipment installed or completed during installation electrical polarity checks must be completed to determine that connections have been made properly. Visual verification is an acceptable electrical polarity check.

GROUND FAULT TEST

Using a ground fault tester check each ground fault circuit breaker or receptacle outlet for proper operation. Any ground fault breaker or receptacle outlet, which does not operate properly, should be replaced.

OPERATIONAL TEST

Install light bulbs and/or fluorescent tubes in all fixtures and check for proper operation by turning on the appropriate switches. Repair or replace any inoperative light switches or fixtures.

SMOKE ALARMS

All manufactured homes have smoke alarms wired into the home's electrical system. These devices are sensitive to smoke in the initial stages of a fire and will sound an alarm to alert occupants during a fire. It is essential that the smoke alarms be tested at the time the home is installed at the home site. Testing smoke alarm is a simple operation, but may require the use of a stepladder to safely reach each one and some one to help in determining if they all sound their horns at the same time. Begin by locating each smoke alarm and using the following procedure. Where the smoke alarm manufacturer has different printed instructions, follow those instructions:

1. Check to see that the green light is on; indicating AC power is connected to the alarm. If the green light is not on, check that the unit is properly wired and the circuit breaker is on.
2. Check that the red LED flashes approximately once a minute. If not, replace the battery.
3. Depress and hold the test button for 3 seconds. A loud pulsating alarm should sound.
4. Test each alarm separately in the system.
5. Determine that the initiating alarm triggers other alarms in the system.
6. Should a smoke alarm not sound, confirm that it is properly connected to the branch circuit and that the circuit has power. If it still fails to sound, it must be replaced and its replacement tested.

BASEMENT SMOKE ALARM INSTALLATION INSTUCTION

Units, which have been designed with a basement access, require the installation of a smoke alarm at the time it is set on its permanent foundation.

Under the home, at the bottom of the basement stairs, a junction box was installed as part of the smoke alarm circuit. The cover of this box will have a notice stating "SMOKE ALARM CIRCUIT ONLY". This junction box will be located between the center of the home and the inboard I-beam on the same side as the stairwell and within 4 feet of the end of the stairs. The circuit must be used ONLY for the installation of the smoke alarm

Inside the junction box, the smoke alarm power connector has been wired into the circuit (See Figure 8-10). Obtain the factory provided smoke alarm and complete its installation as follows:

1. Locate and remove the cover from the junction box.
2. Pull the power connector so it extends about 3 inches below the edge of the box.
3. Slip the power connector through the center hole in the smoke alarm-mounting bracket and fasten the mounting bracket to the junction box. The hole patterns between the bracket and box will match.
4. Examine the battery installation in the back of the smoke alarm making certain it is correct. Test the alarm as indicated below.
5. Plug the power connector into the back of the smoke alarm, near the battery location.
6. Attach the smoke alarm to the mounting bracket and twist-lock it in place as indicated.
7. Test the smoke alarm as indicated below:

   Before Installation:

   a. Connect battery. Ensure that the battery is correctly installed.
   b. Check that the red LED operating light flashes approximately once a minute. If not, replace the battery.
   c. Depress and hold test button for 3 seconds minimum. A loud pulsating alarm sounds, indicating that the alarm is working properly and the red LED flashes quickly during the alarm.

   After Installation:

   a. Check to see that the green light is on; indicating AC power is connected to the alarm. If the green light is not on, check that the unit is properly wired and the circuit breaker is on.
   b. Check that the red LED flashes approximately once a minute. If not, replace the battery.
   c. Depress and hold the test button for 3 seconds. A loud pulsating alarm should sound.
   d. Test each alarm separately in the system.
   e. Determine that the initiating alarm triggers other alarms in the system.
   f. Should a smoke alarm not sound, confirm that it is properly connected to the branch circuit and that the circuit has power. If it still fails to sound, it must be replaced and its replacement tested.

NOTICE

FEEDER MAKEUP AND GROUNDING METHOD FOR THIS MANUFACTURED HOME

NOTE:

THE NEUTRAL IS INSULATED FROM THE GROUND IN THIS PANELBOARD. CONDUCTORS BETWEEN THE DISCONNECT AND THE PANELBOARD ARE REQUIRED TO BE CONTINUOUSLY INSULATED AND COLOR CODED INCLUDING THE GROUNDING CONDUCTOR. ALL FOUR FEEDER CONDUCTORS ARE ABSOLUTELY ESSENTIAL.

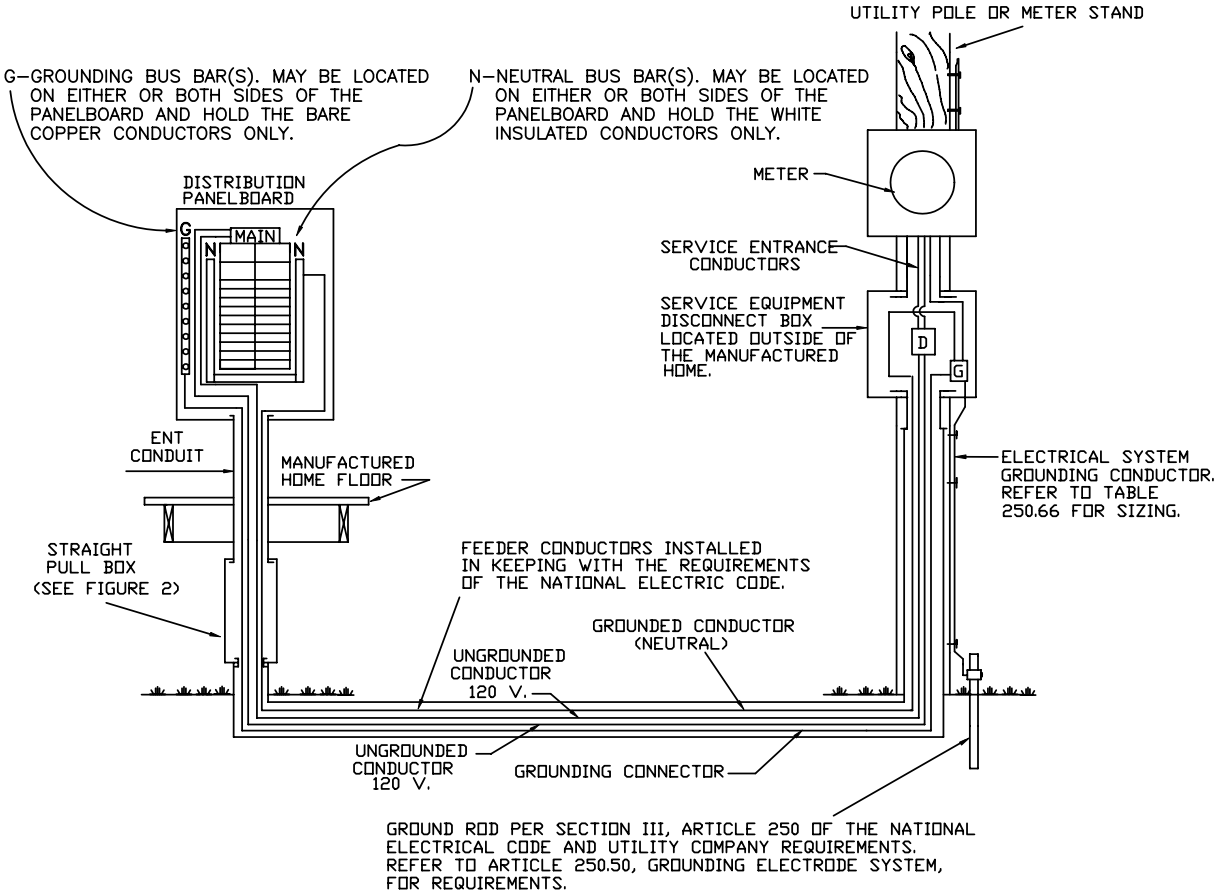

TYPICAL FEEDER MAKEUP & GROUNDING

(BELOW GROUND)

FIGURE 8-1

ELECTRICAL FEEDER & EQUIPMENT SIZES						
FEEDER SIZE	MINIMUM SIZES			FEEDER CONDUCTOR TYPE AND SIZES (AWG) 1, 2, AND 3		
SEE MAIN CIRCUIT BREAKER AND LABEL ON DISTRIBUTION PANELBOARD (AMPERES)	ANGLE OR U PULL BOX (IN)	STRAIGHT PULL BOX (IN)	ENT CONDUIT (IN)	UNGROUNDED CONDUCTORS	GROUNDED CONDUCTORS	GROUNDING CONDUCTORS
100	10x10x4	12x8x4	1 1/2"	NO.4 THN CU NO.2 THN AL	NO.4 THN CU NO.2 THN AL	NO.8 THN CU NO.6 THN AL
200	12x12x4	16x8x4	2"	NO.2/0 THN CU NO.4/0 THN AL	NO.2/0 THN CU NO.4/0 THN AL	NO.6 THN CU NO.4 THN AL

NOTES:
1. CONDUCTOR TYPE AND SIZES ARE IN ACCORDANCE WITH THE NATIONAL ELECTRIC CODE TABLE 310.15(B)(6).
2. COPPER OR ALUMINUM CONDUCTORS MAY BE USED WHEN PROPERLY SIZED IN ACCORDANCE WITH THE NATIONAL ELECTRIC CODE.
3. VOLTAGE DROP NOT CONSIDERED.
4. NATIONAL ELECTRIC CODE 2005 EDITION.

TYPICAL ELECTRICAL FEEDER & EQUIPMENT SIZES

TABLE 8-1

THE NEUTRAL IS INSULATED FROM THE GROUND IN THIS PANELBOARD. CONDUCTORS BETWEEN THE DISCONNECT AND THE PANELBOARD ARE REQUIRED TO BE CONTINUOUSLY INSULATED AND COLOR CODED INCLUDING THE GROUNDING CONDUCTOR. ALL FOUR FEEDER CONDUCTORS ARE ABSOLUTELY ESSENTIAL.

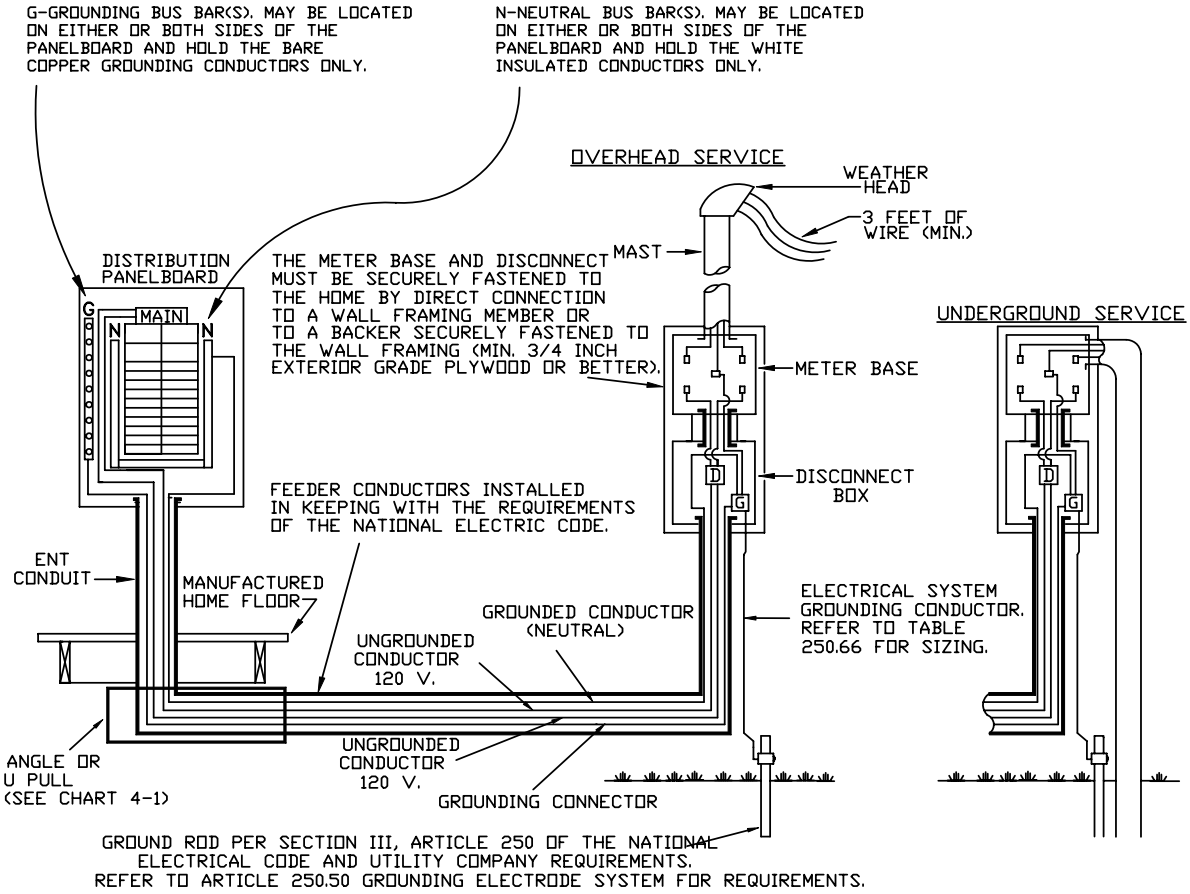

TYPICAL FEEDER MAKEUP & GROUNDING

(ABOVE GROUND)

FIGURE 8-2

CAUTIONS

READ EVERY ITEM

1. CONFIRM THAT THE GROUNDING CONDUCTOR IS CONNECTED TO THE GROUNDING BUS BAR AND THAT THE NEUTRAL CONDUCTOR IS CONNECTED TO THE NEUTRAL BUS BAR.
2. NEVER DOUBLE-UP ON A CIRCUIT BREAKER.
3. NEVER REMOVE COVER FROM ENTRY PANEL.
4. NEVER OVERLOAD A CIRCUIT.
5. NEVER ADD ADDITIONAL CIRCUITS TO THIS PANEL.
6. NEVER REPLACE A CIRCUIT BREAKER WITH ONE HAVING A HIGHER AMPACITY RATING.
7. NEVER CONNECT THE ENTRY PANEL TO THE DISCONNECT BOX WITH A MANUFACTURED LIFE LINE (PIGTAIL CONNECTOR).
8. NEVER USE 3 WIRES IN PLACE OF 4. BECAUSE THE HOME WILL BE IMPROPERLY GROUNDED WITHOUT THE 4 WIRE CONNECTION THE CIRCUIT BREAKERS WILL NOT FUNCTION AND A SHORT CIRCUIT AT ANY TIME COULD CAUSE AN ELECTROCUTION.
9. TRIPPED CIRCUIT BREAKERS OF A PROPERLY CONNECTED SYSTEM INDICATE A SHORT CIRCUIT.

WARNING

THE FOURTH INSULATED CONDUCTOR, WHICH IS THE GROUND, IS ABSOLUTELY CRITICAL FOR SAFETY AND PREVENTION OF AN ELECTROCUTION IN THE EVENT OF A SHORT CIRCUIT.

TYPICAL ELECTRICAL CAUTIONS

TABLE 8-2

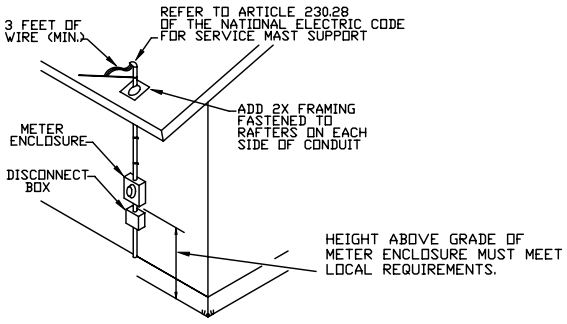

TYPICAL ELECTRICAL SERVICE ENTRANCE
(OVERHEAD SERVICE ABOVE EAVE)

FIGURE 8-3

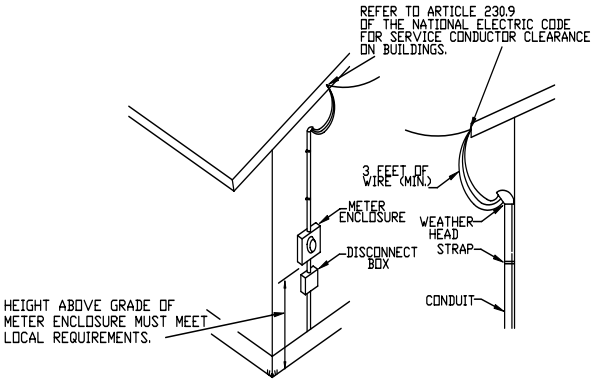

TYPICAL ELECTRICAL SERVICE ENTRANCE
(OVERHEAD SERVICE BELOW EAVE)

FIGURE 8-4

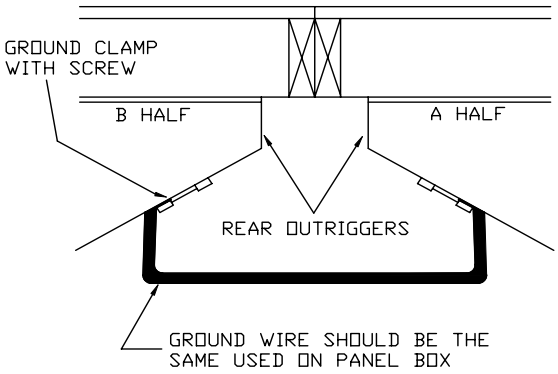

ADDITIONAL CONNECTORS WILL BE NEEDED FOR ADDITIONAL FLOOR SECTIONS

TYPICAL FRAME TO FRAME BONDING

FIGURE 8-5

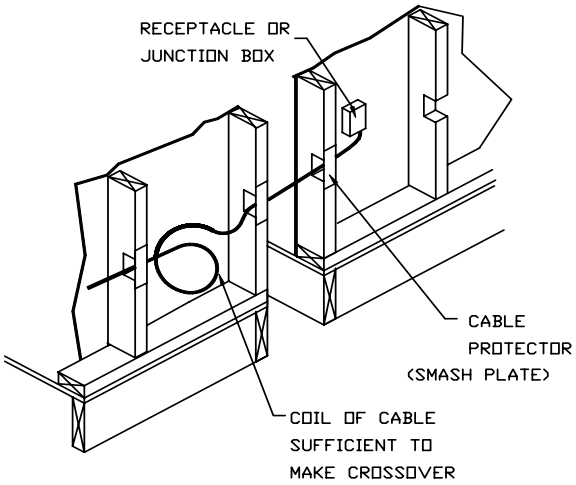

TYPICAL ENDWALL CROSSOVER

FIGURE 8-6

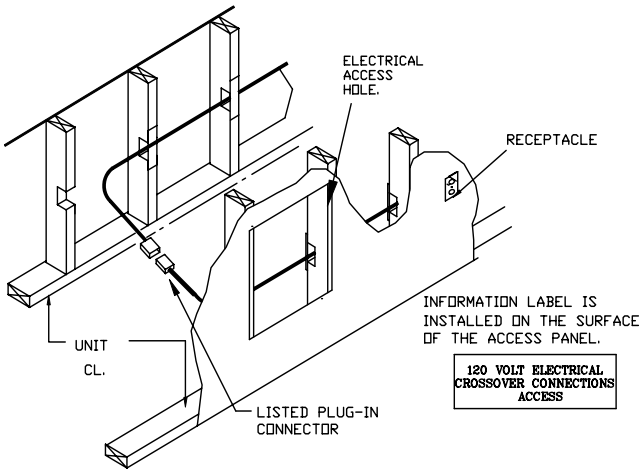

TYPICAL INTERIOR WALL CROSSOVER

FIGURE 8-7

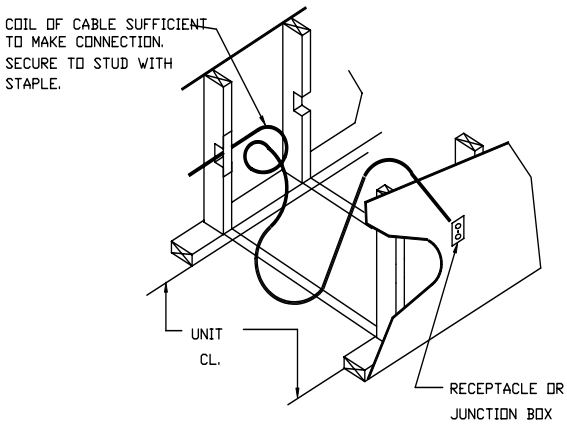

TYPICAL INTERIOR WALL CROSSOVER

FIGURE 8-8

CONNECTING AND DISCONNECTING SELF-CONTAINED POWER CONNECTOR

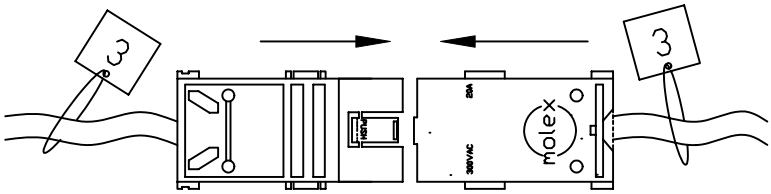

TO CONNECT ELECTRICAL POWER FROM ONE SECTION OF THE HOME TO THE OTHER(S), LOCATE THE CROSSOVER POINTS, IDENTIFY WHICH CONDUCTORS GO TOGETHER (SEE NUMBERED TAG), AND PUSH THE CONNECTORS TOGETHER, FULLY, UNTIL THEY LATCH IN PLACE.

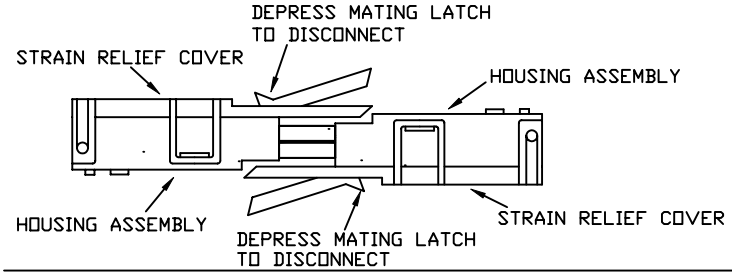

TO CONNECT, MATE THE CONNECTORS AND SLIDE THEM TOGETHER UNTIL MATING LATCHES LOCK.

TO RELEASE THE CONNECTOR SYSTEM, DEPRESS BOTH MATING LATCHES AT THE SAME TIME AND PULL THE CONNECTORS APART.

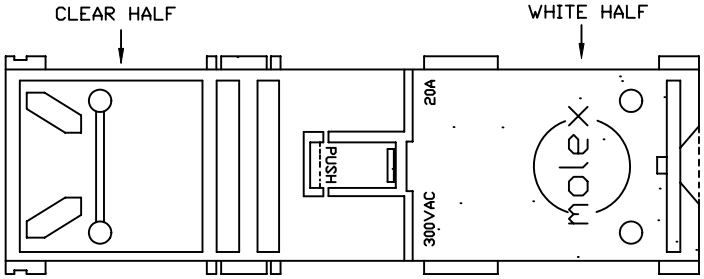

TYPICAL SELF-CONTAINED POWER CONNECTOR

FIGURE 8-9

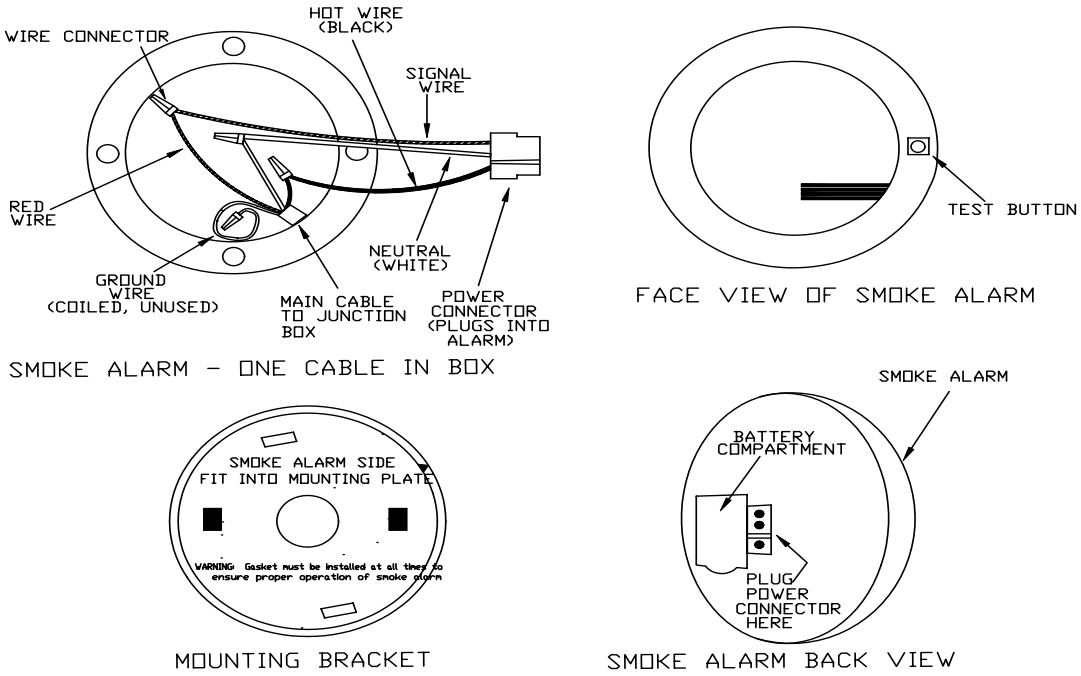

TYPICAL SMOKE ALARM INSTALLATION

FIGURE 8-10

Ground Anchoring System

9-1 ANCHORING REQUIREMENT

All homes, whether manufactured or site constructed, must be securely fastened to the ground to resist the sliding and overturning effects of high winds. This section will provide the information needed to properly install an anchoring system which will provide resistance to lateral movement (sliding) and overturning (uplift). Minimum load requirements for Wind Zones I and II are as follows:

- Wind Zone I: A horizontal wind load of not less than 15 pounds per square foot and an uplift of not less than -9 pounds per square foot increased by a factor of safety of 1.5.
- Wind Zone II: A horizontal wind load of not less than 39 pounds per square foot and a net uplift of not less than -27 pounds per square foot increased by a factor of safety of 1.5
- Wind Zone III: Not applicable

This home was designed for the wind conditions specified in the Structural Design Basis Certificate, Design Wind Zone Map, which is posted in the home on a wall in the master bedroom clothes closet. See section 2-2.

CAUTION: The ground anchoring systems described and illustrated in this manual do not consider flood or seismic loads or other site conditions. Where flood, seismic, or other site conditions prohibit the use of these instructions, a registered professional engineer or registered architect must design the stabilizing system.

CAUTION: Although local sheltered conditions may seem to permit the installation of the home without the use of a proper anchoring system, the anchoring system must be used in all cases to protect the home.

9-2 ANCHOR LOCATIONS

Determine the location of **side wall**, **end wall**, and any **marriage wall** or **porch post** anchors which may be needed and mark their location on a sketch of the home site. Make certain that anchors will be placed within two feet of each end of the home and be evenly spaced along the length of the home being careful not to exceed the maximum spacing shown in Tables 9-1 through 9-14. **Where the spacing of the anchors will exceed 12 feet on centers along the I-beams they must be located to be within 18 inches of either side of a supporting pier.**

NOTE: The LAHJ may have anchor spacing requirements that supersede the values provided in this instruction.

NOTE: Most anchors are installed inside the perimeter of the home and must be installed prior to positioning the home on the home site.

9-3 SIZING THE ANCHORS AND ANCHOR HEADS

Using the holding capacity of the soil for auger-type anchors determined form the soil test, see Section 3-8, and the loads listed in the notes for Figures 9-1 through 9-14, determine from the anchor manufacturer's specifications and installation instructions which ground anchors and anchor heads will be needed.

Ground anchors and anchor heads must be sized to resist the loads listed in the notes for Figures 9-1 through 9-14. The materials necessary to anchor the home to the ground have not been provided by this company and may be obtained through an independent manufactured home retailer, installer, or anchor equipment manufacturer.

9-4 ANCHORING EQUIPMENT

For an installation resulting in a safe and durable anchoring system each ground anchor and system component must be certified by a registered professional engineer or registered architect or be listed by a nationally recognized testing agency as suitable for use with the soil classification and bearing capacity found at the home site based on a nationally recognized testing protocol.

GROUND ANCHORS

The ground anchors and system components must be installed in keeping with the terms of the certification or listing presented in the installation instructions for the intended application and must be:

- Installed to their full depth,
- Be provided with protection against weather deterioration and corrosion at least equivalent to that provided by a coating of zinc on steel not less than 0.30 oz. ft.^{2} of surface coated.
- Be capable of resisting a minimum ultimate load of 6,000 lbs. and a minimum working load of 3,150 lbs. as installed.

TIE-DOWN STRAPS

The minimum requirements for tie-down strapping material are as follows:

- The strap material must be at least 1 1/4 inches wide and 0.35 inches thick.
- The material must be Type 1, Grade 1, and Finish B conforming to ASTM D 3953-97.
- Be capable of resisting a minimum ultimate load of 4,725 lbs. and a minimum working load of 3,150 lbs. as installed.
- Be provided with protection against weather deterioration and corrosion at least equivalent to that provided by a coating of zinc on steel not less than 0.30 oz. ft.^{2} of surface coated.
- Slit or cut edges need not be zinc coated.

STABILIZING DEVICES

Stabilizing plates or cement collars must be installed to provide added resistance to overturning or sliding forces. The minimum requirements for anchor stabilizing plates and collars are as follows:

- Concrete collar stabilizing devices must be a minimum 10 inches in diameter, 18 inches high, and be poured in place with concrete having a 28 day compressive strength of not less than 2,500 psi. See Figure 9-15.
- Metal stabilizer plates must be provided with protection against weather deterioration and corrosion at least equivalent to that provided by a coating of zinc on steel not less than 0.30 oz. ft.^{2} of surface coated. See Figure 9-16.
- ABS stabilizer plates must be listed and certified for such use. See Figure 9-16.

9-5 INSTALLATION

ANCHORS

Ground augers must be installed below the local frost line unless the foundation system is frost protected to prevent the effects of frost heave or the soil is not frost susceptible. Frost protected foundations must meet the requirements of ASCE 32-01.

When diagonal ties are used, the anchor head will be 10 inches in from the edge of the floor. This will allow the anchor head to be inside an 8-inch foundation wall. When vertical ties are used, the anchor head will be 2 inches outboard of the I-beam centerline. See Figures 9-1 through 9-14.

IMPORTANT: Anchor spacing decreases as roof pitch and pier height increase.

The ground anchor should be installed at the same angle as the diagonal tie so that the pulling force on the anchor is in line with the ties. Should this not be possible, a concrete collar shall be poured around the anchor shaft or a stabilizing plate driven in front of the anchors direction of pull. The collar must be 10 inches in diameter and 18 inches deep. See Figure 9-15. As an alternate to the concrete collar, a stabilizing device may be installed on the anchor. See Figure 9-16. Ground anchors must be installed to their full depth and stabilizer collars or plates. Plates must be installed in accordance with the anchors listing or certification.

SIDE FRAME TIES

The home must be in its final resting position and in proper working alignment prior to the installation of the anchor ties. The diagonal ties (frame ties) must be spaced as evenly as practical along the length of the home with not more than 2 feet open end spacing at each end.

The vertical and/or diagonal (frame ties) required can be determined by referring to Figures 9-1 through 9-14. The spacing requirements are based on the geographical area (Zone I or Zone II), vertical or diagonal system, width of home, I-beam spread, height of pier, and slope of roof. Refer to Figure 9-17 for additional floor sections.

Vertical and/or diagonal ties can be connected to the frame I-beams by wrapping, clipping or bolting. Where the ties are wrapped the strapping must be protected from the edges of the I-beam by crimping another layer of strapping to the top and bottom hangers of the I-beam before making the wrap. Make certain to wrap only at the protected areas. (See Figures 9-18, 9-19, 9-20 and 9-21).

Tighten the straps using the tensioning device provided with the ground anchors. Following the tensioning specifications provided by the anchor equipment manufacture carefully. Use caution to avoid over tensioning of the straps, which might pull the home off the piers. It is recommended that all straps be tightened only enough to remove the slack. Then, after all straps are installed and the slack removed, tension the straps.

The strap tension should be rechecked at frequent intervals until all pier settlement has stopped and alignment adjustments have been made as needed.

LONGITUDINAL FRAME TIES

In addition to the vertical and/or diagonal ties required along the length of the home, diagonal ties are also required to be placed at the ends of the home. They must be attached to the I-beam as shown in Figures 9-22, 9-23, and 9-24. The ties may be bolted or clipped to the I-beam or lower flange as shown.

Tie spacing is dependent on the geographic zone the home is located in (Zone I or Zone II, height of exterior wall and pier height. Refer to Tables 9-15 through 9-18 for spacing.

COLUMN AND PORCH POST UPLIFT ANCHORING

When it is necessary to anchor a centerline, sidewall, or porch post column due to wind uplift loading, the anchor strap will have been installed on the home at the time of manufacture. The strap will need to be connected to a ground anchor. Figures 9-25, 9-26 and 9-27 illustrate a centerline application as typical.

CAUTION: During any realigning process, do not jack the home against tightened ground ties.

9-6 ALTERNATE ANCHORING

MONOLITHIC SLABS

Should the home be placed on a full concrete slab as shown in Figure 9-28, the ground anchors may be replaced with anchor bolts imbedded in the concrete slab as shown. The location of the anchor bolt in relation to the longitudinal I-beams of the frame will be the same as for the ground anchors. (See Figure 9-28).

PERIMETER AND TRANSVERSE BEAM SUPPORT

Ground anchoring for homes fully supported on a perimeter wall and transverse I-beams is achieved by welding the frame of the home to the transverse I-beams or 1/2 inch diameter rods or anchored bearing plates embedded in the wall, footing, and or pilasters of the support system. The transverse I-beams have, in like manner, been welded to 1/2 inch diameter rods or anchored bearing plates embedded in the wall, footing, and or pilasters or the support system in keeping with the requirements of its design. See the detail pages “A-9” for this support and anchoring system.

PERIMETER AND PIER SUPPORT

Ground anchoring for homes fully supported on a perimeter wall and by piers beneath the homes I-beams is achieved by the strap and anchor system described in this section. Also see detail pages “A-9 CRAWL” for this support and anchoring system.

9-7 ROOF SLOPE

Roof slope and I-beam centers affect the design of the anchoring system for the home. Tables 9-1 through 9-14 address different I-beam centers and roof slopes, **make certain** you have selected the correct Table for the home being installed.

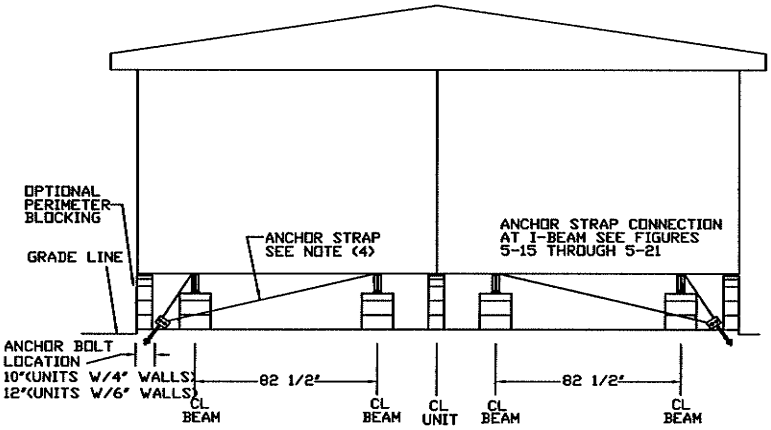

MAXIMUM ANCHOR SPACING (DIAGONAL) 82 1/2" I-BEAM CENTERS
ROOF SLOPE LESS THAN 4.36/12 (20°) ONLY

GENERAL NOTES

1. THE ANCHOR MUST BE MINUTE MAN OR EQUAL. ANCHOR AND ANCHOR HEAD MUST HAVE AN ULTIMATE STRENGTH EQUAL TO OR GREATER THAN 5202 LBS. FOR 23 & 24 WIDE, 6033 LBS. FOR 26, 27 & 28 WIDE AND 5925 LBS. FOR 32 WIDE.
2. ANCHOR BOLTS (REGARDLESS OF ZONING) MUST START NO FURTHER THAN 2'-0" FROM EACH END OF HOME.
3. IF ANCHOR IS INSERTED VERTICALLY A CONCRETE COLLAR OR STABILIZING DEVICE MUST BE USED AT THE GROUND LINE. SEE FIG. 9-15 AND 9-16.
4. EACH OF THE STRAPS AND CONNECTIONS TO THE I-BEAM MUST HAVE AN ULTIMATE STRENGTH OF 4725 LBS. SEE FIG. 9-15 AND 9-16.
5. REFER TO TABLE 9-1 FOR ZONE 1 AND ZONE 2 MAXIMUM STRAP SPACING FOR THIS ANCHORING SYSTEM.

MAXIMUM PIER HEIGHT	23' WIDE UNITS		24' WIDE UNITS		26' WIDE UNITS		27'/28' WIDE UNITS		32' WIDE UNITS	
ZONE 1 & 2	ZONE # 1	ZONE # 2	ZONE # 1	ZONE # 2	ZONE # 1	ZONE # 2	ZONE # 1	ZONE # 2	ZONE # 1	ZONE # 2
25 1/2"	21 ft.	12 ft.	22 ft.	12 ft.	24 ft.	14 ft.	25 ft.	14 ft.	27 ft.	12 ft.
33 1/2"	20 ft.	11 ft.	20 ft.	12 ft.	23 ft.	13 ft.	24 ft.	13 ft.	26 ft.	14 ft.
41 1/2"	19 ft.	10 ft.	19 ft.	11 ft.	21 ft.	12 ft.	22 ft.	13 ft.	24 ft.	14 ft.
49 1/2"	17 ft.	10 ft.	18 ft.	10 ft.	20 ft.	11 ft.	21 ft.	12 ft.	23 ft.	13 ft.
57 1/2"	17 ft.	9 ft.	17 ft.	10 ft.	19 ft.	11 ft.	20 ft.	11 ft.	22 ft.	12 ft.

TYPICAL TIEDOWN APPLICATION
(4/12 & LESS, 82 1/2" I-BEAM SPACING W/ DIAGONAL SPACING)

FIGURE 9-1 & TABLE 9-1

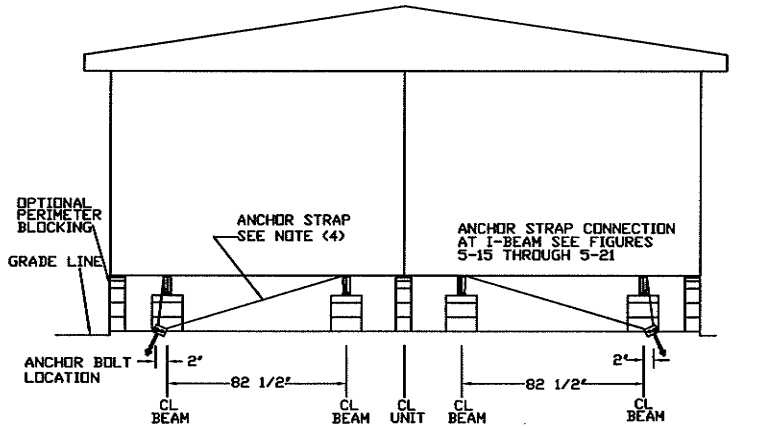

MAXIMUM ANCHOR SPACING (VERTICAL) 82 1/2" I-BEAM CENTERS
ROOF SLOPE LESS THAN 4.36/12 (20°) ONLY

GENERAL NOTES

1. THE ANCHOR MUST BE MINUTE MAN OR EQUAL. ANCHOR AND ANCHOR HEAD MUST HAVE AN ULTIMATE STRENGTH EQUAL TO OR GREATER THAN 4725 LBS. FOR 23, 24, 26, 27, 28, AND 32 WIDE UNITS.
2. ANCHOR BOLTS (REGARDLESS OF ZONING) MUST START NO FURTHER THAN 2'-0" FROM EACH END OF HOME.
3. IF ANCHOR IS INSERTED VERTICALLY A CONCRETE COLLAR OR STABILIZING DEVICE MUST BE USED AT THE GROUND LINE. SEE FIG. 9-15 AND 9-16.
4. EACH OF THE STRAPS AND CONNECTIONS TO THE I-BEAM MUST HAVE AN ULTIMATE STRENGTH OF 4725 LBS. SEE FIG. 9-15 AND 9-16.
5. REFER TO TABLE 9-2 FOR ZONE 1 AND ZONE 2 MAXIMUM STRAP SPACING FOR THIS ANCHORING SYSTEM.

MAXIMUM PIER HEIGHT	23' WIDE UNITS		24' WIDE UNITS		26' WIDE UNITS		27'/28' WIDE UNITS		32' WIDE UNITS	
ZONE 1 & 2	ZONE # 1	ZONE # 2	ZONE # 1	ZONE # 2	ZONE # 1	ZONE # 2	ZONE # 1	ZONE # 2	ZONE # 1	ZONE # 2
25 1/2"	15 ft.	8 ft.	15 ft.	8 ft.	15 ft.	8 ft.	15 ft.	8 ft.	15 ft.	8 ft.
33 1/2"	14 ft.	8 ft.	14 ft.	8 ft.	14 ft.	8 ft.	14 ft.	8 ft.	14 ft.	8 ft.
41 1/2"	13 ft.	8 ft.	13 ft.	8 ft.	13 ft.	8 ft.	13 ft.	8 ft.	13 ft.	8 ft.
49 1/2"	13 ft.	7 ft.	13 ft.	7 ft.	13 ft.	7 ft.	13 ft.	7 ft.	13 ft.	7 ft.
57 1/2"	12 ft.	7 ft.	12 ft.	7 ft.	12 ft.	7 ft.	12 ft.	7 ft.	12 ft.	7 ft.

TYPICAL TIEDOWN APPLICATION
(4/12 & LESS, 82 1/2" I-BEAM SPACING W/ VERTICAL SPACING)

FIGURE 9-2 & TABLE 9-2

EVOR F. JOHNS REGISTERED NO. 01655 STATE OF FLORIDA PROFESSIONAL ENGINEER
12/17/08

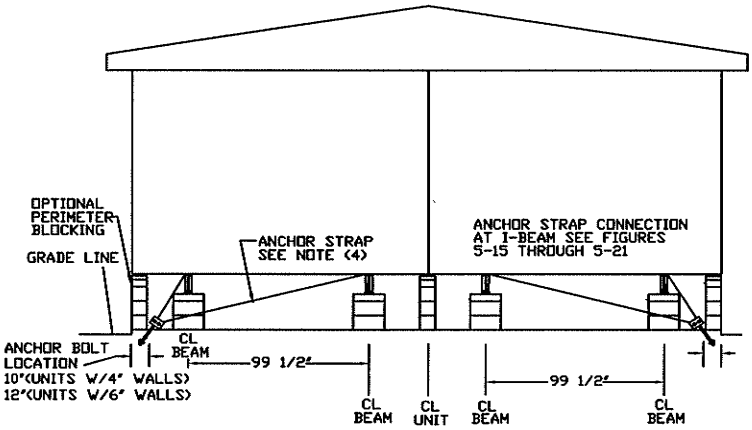

MAXIMUM ANCHOR SPACING (DIAGONAL) 99 1/2" I-BEAM CENTERS
ROOF SLOPE LESS THAN 4.36/12 (20°) ONLY

GENERAL NOTES

1. THE ANCHOR MUST BE MINUTE MAN OR EQUAL. ANCHOR AND ANCHOR HEAD MUST HAVE AN ULTIMATE STRENGTH EQUAL TO OR GREATER THAN 5318 LBS. FOR 23, 24, AND 26 WIDE, 5549 LBS. FOR 27 and 28 WIDE AND 5827 LBS. FOR 32 WIDE.

2. ANCHOR BOLTS (REGARDLESS OF ZONING) MUST START NO FURTHER THAN 2'-0" FROM EACH END OF HOME.

3. IF ANCHOR IS INSERTED VERTICALLY A CONCRETE COLLAR OR STABILIZING DEVICE MUST BE USED AT THE GROUND LINE. SEE FIG. 9-15 AND 9-16.

4. EACH OF THE STRAPS AND CONNECTIONS TO THE I-BEAM MUST HAVE AN ULTIMATE STRENGTH OF 4725 LBS. SEE FIG. 9-15 AND 9-16.

5. REFER TO TABLE 9-3 FOR ZONE 1 AND ZONE 2 MAXIMUM STRAP SPACING FOR THIS ANCHORING SYSTEM.

MAXIMUM PIER HEIGHT	23' WIDE UNITS		24' WIDE UNITS		26' WIDE UNITS		27'/28' WIDE UNITS		32' WIDE UNITS	
ZONE 1 & 2	ZONE # 1	ZONE # 2	ZONE # 1	ZONE # 2	ZONE # 1	ZONE # 2	ZONE # 1	ZONE # 2	ZONE # 1	ZONE # 2
25 1/2"	18 ft.	10 ft.	19 ft.	11 ft.	22 ft.	13 ft.	23 ft.	13 ft.	26 ft.	13 ft.
33 1/2"	17 ft.	10 ft.	18 ft.	10 ft.	21 ft.	12 ft.	22 ft.	12 ft.	24 ft.	14 ft.
41 1/2"	16 ft.	9 ft.	17 ft.	10 ft.	20 ft.	11 ft.	21 ft.	12 ft.	23 ft.	13 ft.
49 1/2"	16 ft.	9 ft.	16 ft.	9 ft.	19 ft.	11 ft.	19 ft.	11 ft.	22 ft.	12 ft.
57 1/2"	15 ft.	8 ft.	15 ft.	9 ft.	18 ft.	10 ft.	19 ft.	10 ft.	21 ft.	12 ft.

TYPICAL TIEDOWN APPLICATION

(4/12 & LESS, 99 1/2" I-BEAM SPACING W/ DIAGONAL SPACING)

FIGURE 9-3 & TABLE 9-3

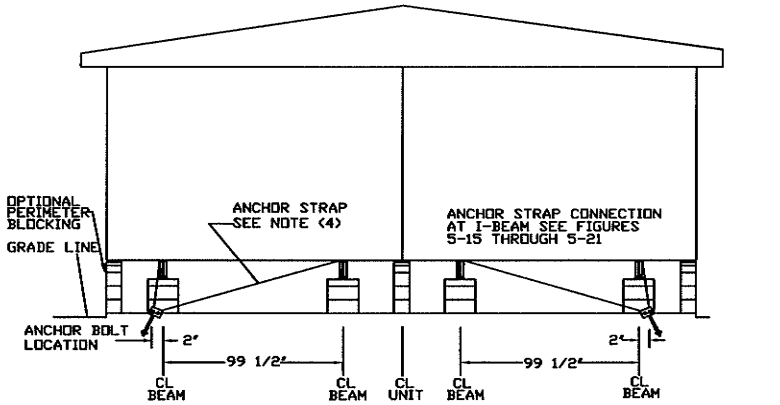

MAXIMUM ANCHOR SPACING (VERTICAL) 99 1/2" I-BEAM CENTERS
ROOF SLOPE LESS THAN 4.36/12 (20°) ONLY

GENERAL NOTES

1. THE ANCHOR MUST BE MINUTE MAN OR EQUAL. ANCHOR AND ANCHOR HEAD MUST HAVE AN ULTIMATE STRENGTH EQUAL TO OR GREATER THAN 4725 LBS. FOR 23, 24, 26, 27, 28, AND 32 WIDE UNITS.

2. ANCHOR BOLTS (REGARDLESS OF ZONING) MUST START NO FURTHER THAN 2'-0" FROM EACH END OF HOME.

3. IF ANCHOR IS INSERTED VERTICALLY A CONCRETE COLLAR OR STABILIZING DEVICE MUST BE USED AT THE GROUND LINE. SEE FIG. 9-15 AND 9-16.

4. EACH OF THE STRAPS AND CONNECTIONS TO THE I-BEAM MUST HAVE AN ULTIMATE STRENGTH OF 4725 LBS. SEE FIG. 9-15 AND 5-16.

5. REFER TO TABLE 9-4 FOR ZONE 1 AND ZONE 2 MAXIMUM STRAP SPACING FOR THIS ANCHORING SYSTEM.

MAXIMUM PIER HEIGHT	23' WIDE UNITS		24' WIDE UNITS		26' WIDE UNITS		27'/28' WIDE UNITS		32' WIDE UNITS	
ZONE 1 & 2	ZONE # 1	ZONE # 2	ZONE # 1	ZONE # 2	ZONE # 1	ZONE # 2	ZONE # 1	ZONE # 2	ZONE # 1	ZONE # 2
25 1/2"	15 ft.	8 ft.	15 ft.	8 ft.	15 ft.	8 ft.	15 ft.	8 ft.	15 ft.	8 ft.
33 1/2"	15 ft.	8 ft.	15 ft.	8 ft.	15 ft.	8 ft.	15 ft.	8 ft.	15 ft.	8 ft.
41 1/2"	14 ft.	8 ft.	14 ft.	8 ft.	14 ft.	8 ft.	14 ft.	8 ft.	14 ft.	8 ft.
49 1/2"	14 ft.	8 ft.	14 ft.	8 ft.	14 ft.	8 ft.	14 ft.	8 ft.	14 ft.	8 ft.
57 1/2"	13 ft.	7 ft.	13 ft.	7 ft.	13 ft.	7 ft.	13 ft.	7 ft.	13 ft.	7 ft.

TYPICAL TIEDOWN APPLICATION

(4/12 & LESS, 99 1/2" I-BEAM SPACING W/ VERTICL SPACING)

FIGURE 9-4 & TABLE 9-4

EYOR F. JOHNS REGISTERED NO. 01666 STATE OF INDIANA PROFESSIONAL ENGINEER

12/17/08

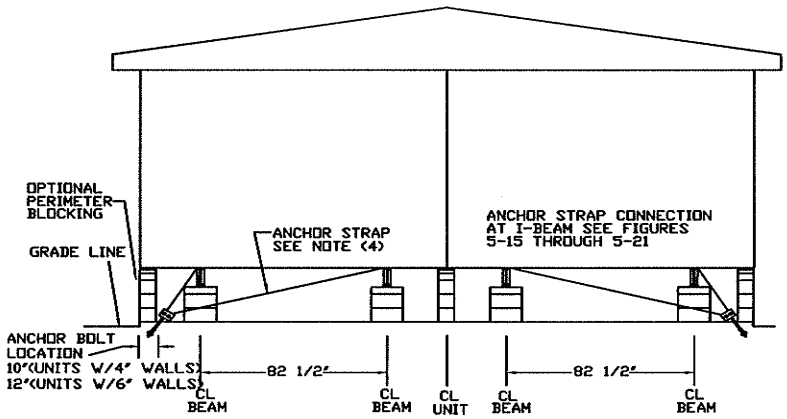

MAXIMUM ANCHOR SPACING (DIAGONAL) 82 1/2" I-BEAM CENTERS
ROOF SLOPE 5/12 ONLY

GENERAL NOTES

1. THE ANCHOR MUST BE MINUTE MAN OR EQUAL. ANCHOR AND ANCHOR HEAD MUST HAVE AN ULTIMATE STRENGTH EQUAL TO OR GREATER THAN 5202 LBS. FOR 23 & 24 WIDE, 6033 LBS. FOR 26, & 28 WIDE AND 5925 LBS. FOR 32 WIDE.
2. ANCHOR BOLTS (REGARDLESS OF ZONING) MUST START NO FURTHER THAN 2'-0" FROM EACH END OF HOME.
3. IF ANCHOR IS INSERTED VERTICALLY A CONCRETE COLLAR OR STABILIZING DEVICE MUST BE USED AT THE GROUND LINE. SEE FIG. 9-15 AND 9-16.
4. EACH OF THE STRAPS AND CONNECTIONS TO THE I-BEAM MUST HAVE AN ULTIMATE STRENGTH OF 4725 LBS. SEE FIG. 9-15 AND 9-16.
5. REFER TO TABLE 9-5 FOR ZONE 1 ANI ZONE 2 MAXIMUM STRAP SPACING FOR THIS ANCHORING SYSTEM.

MAXIMUM PIER HEIGHT	24' WIDE UNITS		26' WIDE UNITS		27'/28' WIDE UNITS		32' WIDE UNITS	
ZONE 1 & 2	ZONE # 1	ZONE # 2	ZONE # 1	ZONE # 2	ZONE # 1	ZONE # 2	ZONE # 1	ZONE # 2
25 1/2"	12 ft.	7 ft.	12 ft.	7 ft.	12 ft.	7 ft.	11 ft.	6 ft.
33 1/2"	12 ft.	7 ft.	11 ft.	6 ft.	11 ft.	6 ft.	10 ft.	6 ft.
41 1/2"	11 ft.	6 ft.	10 ft.	6 ft.	10 ft.	6 ft.	10 ft.	5 ft.
49 1/2"	10 ft.	6 ft.	10 ft.	5 ft.	10 ft.	5 ft.	9 ft.	5 ft.
57 1/2"	10 ft.	5 ft.	9 ft.	5 ft.	9 ft.	5 ft.	9 ft.	5 ft.

TYPICAL TIEDOWN APPLICATION

(5/12, 82 1/2" I-BEAM SPACING W/ DIAGONAL SPACING)

FIGURE 9-5 & TABLE 9-5

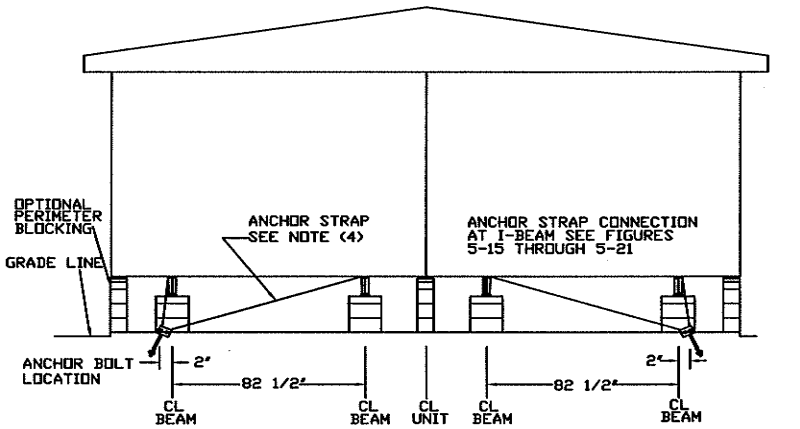

MAXIMUM ANCHOR SPACING (VERTICAL) 82 1/2" I-BEAM CENTERS
ROOF SLOPE 5/12 ONLY

GENERAL NOTES

1. THE ANCHOR MUST BE MIN MAN OR EQUAL. ANCHOR AND HEAD MUST HAVE AN ULTIMA EQUAL TO OR GREATER THAN FOR 24, 26, 27, 28, AND 32
2. ANCHOR BOLTS (REGARDLE ZONING) MUST START NO FU THAN 2'-0" FROM EACH END
3. IF ANCHOR IS INSERTED A CONCRETE COLLAR OR STA DEVICE MUST BE USED AT T LINE. SEE FIG. 9-15 AND 9-
4. EACH OF THE STRAPS AN CONNECTIONS TO THE I-BEA HAVE AN ULTIMATE STRENGT 4725 LBS. SEE FIG. 9-15 A
5. REFER TO TABLE 9-6 FO ZONE 2 MAXIMUM STRAP SPA THIS ANCHORING SYSTEM.

MAXIMUM PIER HEIGHT	24' WIDE UNITS		26' WIDE UNITS		27'/28' WIDE UNITS		32' WIDE UNITS	
ZONE 1 & 2	ZONE # 1	ZONE # 2	ZONE # 1	ZONE # 2	ZONE # 1	ZONE # 2	ZONE # 1	ZONE # 2
25 1/2"	9 ft	5 ft	9 ft	5 ft	9 ft	5 ft	8 ft	5 ft
33 1/2"	9 ft	5 ft	8 ft	5 ft	8 ft	5 ft	8 ft	4 ft
41 1/2"	8 ft	5 ft	8 ft	4 ft	8 ft	4 ft	7 ft	4 ft
49 1/2"	8 ft	4 ft	8 ft	4 ft	7 ft	4 ft	7 ft	4 ft
57 1/2"	8 ft	4 ft	7 ft	4 ft	7 ft	4 ft	7 ft	4 ft

TYPICAL TIEDOWN APPLICATION

(5/12 , 82 1/2" I-BEAM SPACING W/ VERTICL SPACING)

FIGURE 9-6 & TABLE 9-6

EVOR F. JOHNS REGISTERED NO. 01656 STATE OF INDIANA PROFESSIONAL ENGINEER
12/17/08

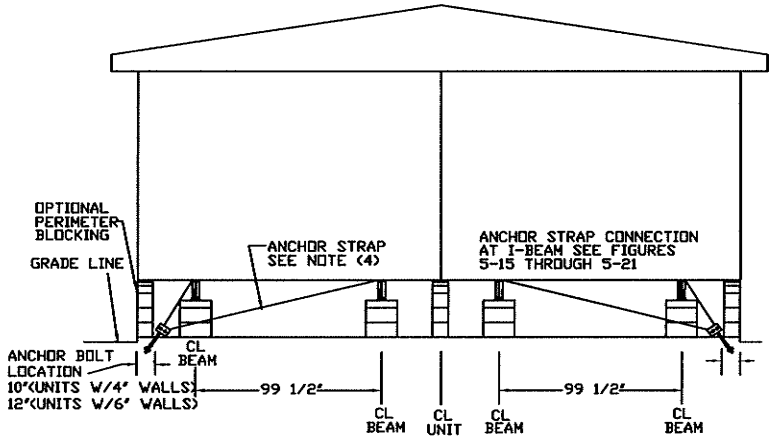

MAXIMUM ANCHOR SPACING (DIAGONAL) 99 1/2" I-BEAM CENTERS
ROOF SLOPE 5/12 ONLY

GENERAL NOTES

1. THE ANCHOR MUST BE MINUTE MAN OR EQUAL. ANCHOR AND ANCHOR HEAD MUST HAVE AN ULTIMATE STRENGTH EQUAL TO OR GREATER THAN 5318 LBS. FOR 23, 24, AND 26 WIDE, 5549 LBS. FOR 27 and 28 WIDE AND 5827 LBS. FOR 32 WIDE.
2. ANCHOR BOLTS (REGARDLESS OF ZONING) MUST START NO FURTHER THAN 2'-0" FROM EACH END OF HOME.
3. IF ANCHOR IS INSERTED VERTICALLY A CONCRETE COLLAR OR STABILIZING DEVICE MUST BE USED AT THE GROUND LINE. SEE FIG. 9-15 AND 9-16.
4. EACH OF THE STRAPS AND CONNECTIONS TO THE I-BEAM MUST HAVE AN ULTIMATE STRENGTH OF 4725 LBS. SEE FIG. 9-15 AND 9-16.
5. REFER TO TABLE 9-7 FOR ZONE 1 AND ZONE 2 MAXIMUM STRAP SPACING FOR THIS ANCHORING SYSTEM.

MAXIMUM PIER HEIGHT	24' WIDE UNITS		26' WIDE UNITS		27'/28' WIDE UNITS		32' WIDE UNITS	
ZONE 1 & 2	ZONE # 1	ZONE # 2	ZONE # 1	ZONE # 2	ZONE # 1	ZONE # 2	ZONE # 1	ZONE # 2
25 1/2"	13 ft.	7 ft.	12 ft.	7 ft.	12 ft.	7 ft.	11 ft..	6 ft.
33 1/2"	12 ft.	7 ft.	11 ft.	6 ft.	11 ft.	6 ft.	11 ft.	6 ft.
41 1/2"	11 ft.	6 ft.	11 ft.	6 ft.	11 ft.	6 ft.	10 ft.	5 ft.
49 1/2"	11 ft.	6 ft.	10 ft.	6 ft.	10 ft.	6 ft.	10 ft.	5 ft.
57 1/2"	10 ft.	6 ft.	10 ft.	5 ft.	10 ft.	5 ft.	9 ft.	5 ft.

TYPICAL TIEDOWN APPLICATION
(5/12 , 99 1/2" I-BEAM SPACING W/ DIAGONAL SPACING)

FIGURE 9-7 & TABLE 9-7

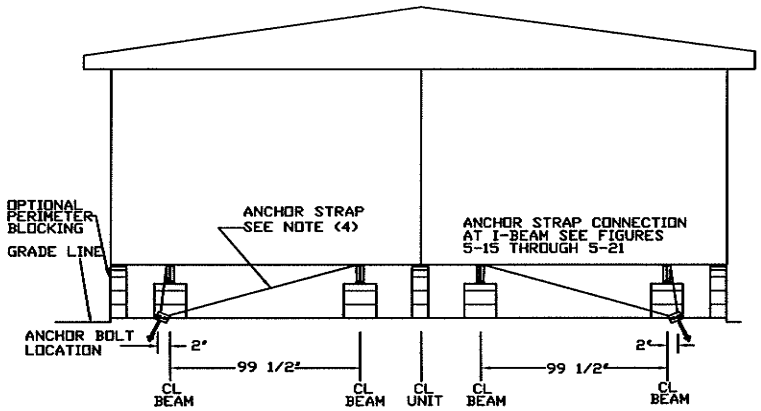

MAXIMUM ANCHOR SPACING (VERTICAL) 99 1/2" I-BEAM CENTERS
ROOF SLOPE 5/12 ONLY

GENERAL NOTES

1. THE ANCHOR MUST BE MINUTE MAN OR EQUAL. ANCHOR AND ANCHOR HEAD MUST HAVE AN ULTIMATE STRENGTH EQUAL TO OR GREATER THAN 4725 LBS. FOR 23, 24, 26,27, 28, AND 32 WIDE UNITS.
2. ANCHOR BOLTS (REGARDLESS OF ZONING) MUST START NO FURTHER THAN 2'-0" FROM EACH END OF HOME.
3. IF ANCHOR IS INSERTED VERTICALLY A CONCRETE COLLAR OR STABILIZING DEVICE MUST BE USED AT THE GROUND LINE. SEE FIG. 9-15 AND 9-16.
4. EACH OF THE STRAPS AND CONNECTIONS TO THE I-BEAM MUST HAVE AN ULTIMATE STRENGTH OF 4725 LBS. SEE FIG. 9-15 AND 9-16.
5. REFER TO TABLE 9-8 FOR ZONE 1 AND ZONE 2 MAXIMUM STRAP SPACING FOR THIS ANCHORING SYSTEM.

MAXIMUM PIER HEIGHT	24' WIDE UNITS		26' WIDE UNITS		27'/28' WIDE UNITS		32' WIDE UNITS	
ZONE 1 & 2	ZONE # 1	ZONE # 2	ZONE # 1	ZONE # 2	ZONE # 1	ZONE # 2	ZONE # 1	ZONE # 2
25 1/2"	9 ft.	5 ft.	9 ft.	5 ft.	9 ft.	5 ft.	8 ft.	5 ft.
33 1/2"	9 ft.	5 ft.	9 ft.	5 ft.	8 ft.	5 ft.	8 ft.	4 ft.
41 1/2"	9 ft.	5 ft.	8 ft.	5 ft.	8 ft.	5 ft.	8 ft.	4 ft.
49 1/2"	8 ft.	5 ft.	8 ft.	4 ft.	8 ft.	4 ft.	8 ft.	4 ft.
57 1/2"	8 ft.	5 ft.	8 ft.	4 ft.	8 ft.	4 ft.	7 ft.	4 ft.

TYPICAL TIEDOWN APPLICATION
(5/12 , 99 1/2" I-BEAM SPACING W/ VERTICAL SPACING)

FIGURE 9-8 & TABLE 9-8

EVOR F. JOHNS
REGISTERED
NO.
01656
STATE OF
INDIANA
PROFESSIONAL ENGINEER
12/17/08

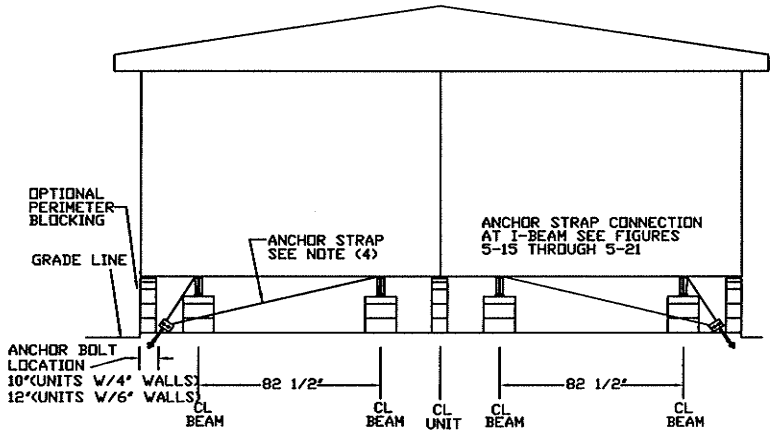

MAXIMUM ANCHOR SPACING (DIAGONAL) 82 1/2" I-BEAM CENTERS
ROOF SLOPE 7/12 ONLY

GENERAL NOTES

1. THE ANCHOR MUST BE MINUTE MAN OR EQUAL. ANCHOR AND ANCHOR HEAD MUST HAVE AN ULTIMATE STRENGTH EQUAL TO OR GREATER THAN 5202 LBS. FOR 23 & 24 WIDE, 6033 LBS. FOR 26, 27 & 28 WIDE AND 5925 LBS. FOR 32 WIDE.
2. ANCHOR BOLTS (REGARDLESS OF ZONING) MUST START NO FURTHER THAN 2'-0" FROM EACH END OF HOME.
3. IF ANCHOR IS INSERTED VERTICALLY A CONCRETE COLLAR OR STABILIZING DEVICE MUST BE USED AT THE GROUND LINE. SEE FIG. 9-15 AND 9-16.
4. EACH OF THE STRAPS AND CONNECTIONS TO THE I-BEAM MUST HAVE AN ULTIMATE STRENGTH OF 4725 LBS. SEE FIG. 9-15 AND 9-16.
5. REFER TO TABLE 9-9 FOR ZONE 1 AND ZONE 2 MAXIMUM STRAP SPACING FOR THIS ANCHORING SYSTEM.

MAXIMUM PIER HEIGHT	24' WIDE UNITS		26' WIDE UNITS		27'/28' WIDE UNITS		32' WIDE UNITS	
ZONE 1 & 2	ZONE # 1	ZONE # 2	ZONE # 1	ZONE # 2	ZONE # 1	ZONE # 2	ZONE # 1	ZONE # 2
25 1/2"	9 ft.	5 ft.	9 ft.	5 ft.	9 ft.	5 ft.	8 ft.	4 ft.
33 1/2"	9 ft.	5 ft.	8 ft.	4 ft.	8 ft.	4 ft.	8 ft.	4 ft.
41 1/2"	8 ft.	4 ft.	8 ft.	4 ft.	8 ft.	4 ft.	8 ft.	4 ft.
49 1/2"	7 ft.	4 ft.	8 ft.	4 ft.	8 ft.	4 ft.	7 ft.	4 ft.
57 1/2"	7 ft.	3 ft.	7 ft.	4 ft.	7 ft.	4 ft.	7 ft.	4 ft.

TYPICAL TIEDOWN APPLICATION

(7/12 ,82 1/2" I-BEAM SPACING W/ DIAGONAL SPACING)

FIGURE 9-9 & TABLE 9-9

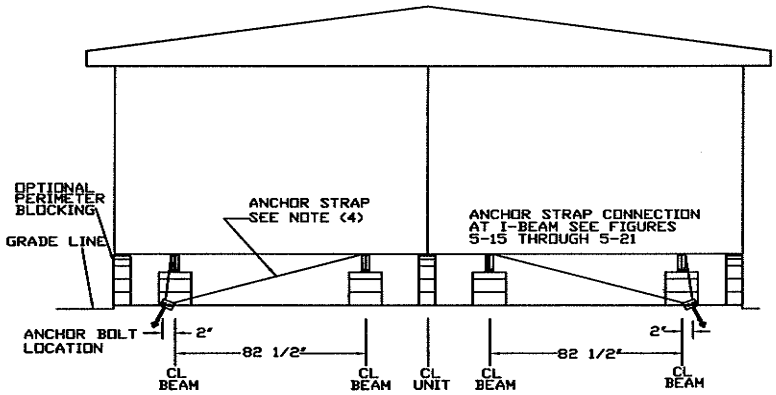

MAXIMUM ANCHOR SPACING (VERTICAL) 82 1/2" I-BEAM CENTERS
ROOF SLOPE 7/12 ONLY

GENERAL NOTES

1. THE ANCHOR MUST BE MINUTE MAN OR EQUAL. ANCHOR AND ANCHOR HEAD MUST HAVE AN ULTIMATE STRENGTH EQUAL TO OR GREATER THAN 4729 LBS. FOR 24, 26, 27, 28, AND 32 WIDE UNITS.
2. ANCHOR BOLTS (REGARDLESS OF ZONING) MUST START NO FURTHER THAN 2'-0" FROM EACH END OF HOME.
3. IF ANCHOR IS INSERTED VERTICALLY A CONCRETE COLLAR OR STABILIZING DEVICE MUST BE USED AT THE GROUND LINE. SEE FIG. 9-15 AND 9-16.
4. EACH OF THE STRAPS AND CONNECTIONS TO THE I-BEAM MUST HAVE AN ULTIMATE STRENGTH OF 4725 LBS. SEE FIG. 9-15 AND 9-16.
5. REFER TO TABLE 9-10 FOR ZONE 1 AND ZONE 2 MAXIMUM STRAP SPACING FOR THIS ANCHORING SYSTEM.

MAXIMUM PIER HEIGHT	24' WIDE UNITS		26' WIDE UNITS		27'/28' WIDE UNITS		32' WIDE UNITS	
ZONE 1 & 2	ZONE # 1	ZONE # 2	ZONE # 1	ZONE # 2	ZONE # 1	ZONE # 2	ZONE # 1	ZONE # 2
25 1/2"	6 ft	3 ft	7 ft	4 ft	7 ft	4 ft	6 ft	4 ft
33 1/2"	6 ft	3 ft	6 ft	4 ft	6 ft	4 ft	6 ft	3 ft
41 1/2"	6 ft	3 ft	6 ft	3 ft	6 ft	3 ft	5 ft	3 ft
49 1/2"	6 ft	3 ft	6 ft	3 ft	5 ft	3 ft	5 ft	3 ft
57 1/2"	6 ft	3 ft	5 ft	3 ft	5 ft	3 ft	5 ft	3 ft

TYPICAL TIEDOWN APPLICATION

(7/12, 82 1/2" I-BEAM SPACING W/ VERTICAL SPACING)

FIGURE 9-10 & CHART 9-10

EVOR F. JOHNS REGISTERED NO. 01656 STATE OF OHIO PROFESSIONAL ENGINEER

12/17/08

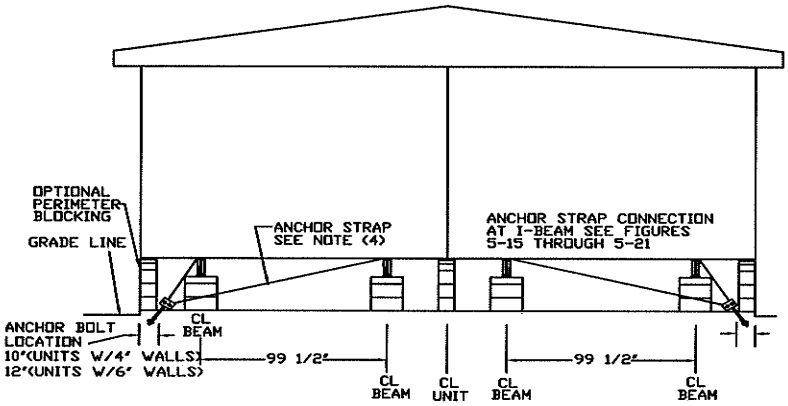

MAXIMUM ANCHOR SPACING (DIAGONAL) 99 1/2" I-BEAM CENTERS
ROOF SLOPE 7/12 ONLY

GENERAL NOTES

1. THE ANCHOR MUST BE MINUTE MAN OR EQUAL. ANCHOR AND ANCHOR HEAD MUST HAVE AN ULTIMATE STRENGTH EQUAL TO OR GREATER THAN 5318 LBS. FOR 23, 24, AND 26 WIDE, 5549 LBS. FOR 27 & 28 WIDE AND 5827 LBS. FOR 32 WIDE.

2. ANCHOR BOLTS (REGARDLESS OF ZONING) MUST START NO FURTHER THAN 2'-0" FROM EACH END OF HOME.

3. IF ANCHOR IS INSERTED VERTICALLY A CONCRETE COLLAR OR STABILIZING DEVICE MUST BE USED AT THE GROUND LINE. SEE FIG. 5-15 AND 5-16.

4. EACH OF THE STRAPS AND CONNECTIONS TO THE I-BEAM MUST HAVE AN ULTIMATE STRENGTH OF 4725 LBS. SEE FIG. 5-15 AND 5-16.

5. REFER TO TABLE 9-11 FOR ZONE 1 AND ZONE 2 MAXIMUM STRAP SPACING FOR THIS ANCHORING SYSTEM.

MAXIMUM PIER HEIGHT	24' WIDE UNITS		26' WIDE UNITS		27'/28' WIDE UNITS		32' WIDE UNITS	
ZONE 1 & 2	ZONE # 1	ZONE # 2	ZONE # 1	ZONE # 2	ZONE # 1	ZONE # 2	ZONE # 1	ZONE # 2
25 1/2"	9 ft.	5 ft.	9 ft.	5 ft.	9 ft.	5 ft.	8 ft.	4 ft.
33 1/2"	9 ft.	5 ft.	8 ft.	4 ft.	8 ft.	4 ft.	8 ft.	4 ft.
41 1/2"	8 ft.	4 ft.	8 ft.	4 ft.	8 ft.	4 ft.	8 ft.	4 ft.
49 1/2"	8 ft.	4 ft.	8 ft.	4 ft.	8 ft.	4 ft.	8 ft.	4 ft.
57 1/2"	7 ft.	4 ft.	8 ft.	4 ft.	8 ft.	4 ft.	7 ft.	4 ft.

TYPICAL TIEDOWN APPLICATION
(7/12, 99 1/2" I-BEAM SPACING W/ DIAGONAL SPACING)
FIGURE 9-11 & CHART 9-11

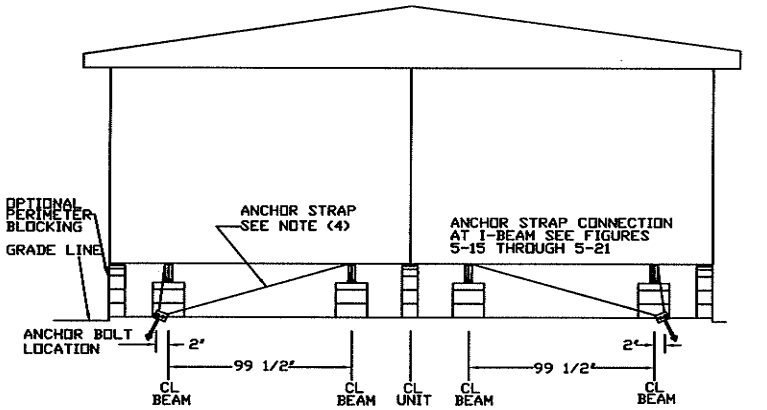

MAXIMUM ANCHOR SPACING (VERTICAL) 99 1/2" I-BEAM CENTERS
ROOF SLOPE 7/12 ONLY

GENERAL NOTES

1. THE ANCHOR MUST BE MINUTE MAN OR EQUAL. ANCHOR AND ANCHOR HEAD MUST HAVE AN ULTIMATE STRENGTH EQUAL TO OR GREATER THAN 4725 LBS. FOR 23, 24, 26, 27, 28, AND 32 WIDE UNITS.

2. ANCHOR BOLTS (REGARDLESS OF ZONING) MUST START NO FURTHER THAN 2'-0" FROM EACH END OF HOME.

3. IF ANCHOR IS INSERTED VERTICALLY A CONCRETE COLLAR OR STABILIZING DEVICE MUST BE USED AT THE GROUND LINE. SEE FIG. 9-15 AND 9-16.

4. EACH OF THE STRAPS AND CONNECTIONS TO THE I-BEAM MUST HAVE AN ULTIMATE STRENGTH OF 4725 LBS. SEE FIG. 9-15 AND 9-16.

5. REFER TO TABLE 9-12 FOR ZONE 1 AND ZONE 2 MAXIMUM STRAP SPACING FOR THIS ANCHORING SYSTEM.

MAXIMUM PIER HEIGHT	24' WIDE UNITS		26' WIDE UNITS		27'/28' WIDE UNITS		32' WIDE UNITS	
ZONE 1 & 2	ZONE # 1	ZONE # 2	ZONE # 1	ZONE # 2	ZONE # 1	ZONE # 2	ZONE # 1	ZONE # 2
25 1/2"	6 ft.	3 ft.	7 ft.	4 ft.	7 ft.	4 ft.	6 ft.	4 ft.
33 1/2"	6 ft.	3 ft.	7 ft.	4 ft.	6 ft.	4 ft.	6 ft.	3 ft.
41 1/2"	6 ft.	3 ft.	6 ft.	4 ft.	6 ft.	4 ft.	6 ft.	3 ft.
49 1/2"	6 ft.	3 ft.	6 ft.	3 ft.	6 ft.	3 ft.	6 ft.	3 ft.
57 1/2"	6 ft.	3 ft.	6 ft.	3 ft.	6 ft.	3 ft.	5 ft.	3 ft.

TYPICAL TIEDOWN APPLICATION
(7/12, 99 1/2" I-BEAM SPACING W/ VERTICAL SPACING)
FIGURE 9-12 & CHART 9-12

EVOR F. JOHNS REGISTERED NO. 01656 STATE OF FLORIDA PROFESSIONAL ENGINEER
12/17/08

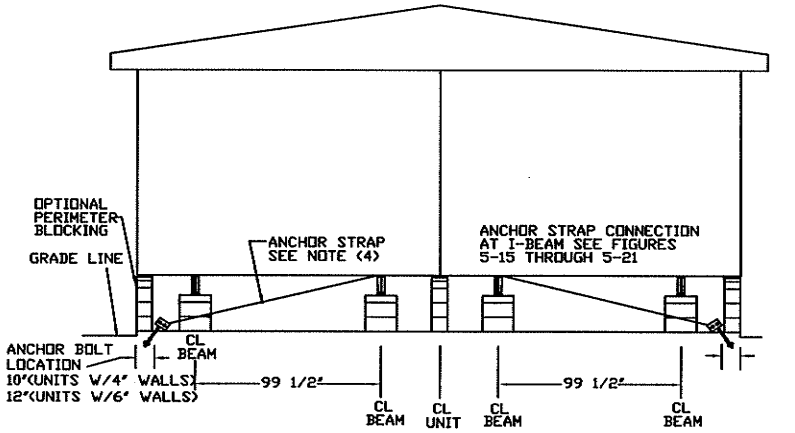

MAXIMUM ANCHOR SPACING (DIAGONAL) 99 1/2" I-BEAM CENTERS
ROOF SLOPE 12/12 ONLY

GENERAL NOTES

1. THE ANCHOR MUST BE MINUTE MAN OR EQUAL. ANCHOR AND ANCHOR HEAD MUST HAVE AN ULTIMATE STRENGTH EQUAL TO OR GREATER THAN 5318 LBS. FOR 23, 24, AND 26 WIDE, 5549 LBS. FOR 27 & 28 WIDE AND 5827 LBS. FOR 32 WIDE.
2. ANCHOR BOLTS (REGARDLESS OF ZONING) MUST START NO FURTHER THAN 2'-0" FROM EACH END OF HOME.
3. IF ANCHOR IS INSERTED VERTICALLY A CONCRETE COLLAR OR STABILIZING DEVICE MUST BE USED AT THE GROUND LINE. SEE FIG. 9-15 AND 9-16.
4. EACH OF THE STRAPS AND CONNECTIONS TO THE I-BEAM MUST HAVE AN ULTIMATE STRENGTH OF 4725 LBS. SEE FIG. 9-15 AND 9-16.
5. REFER TO TABLE 9-13 FOR MAXIMUM STRAP SPACING FOR THIS ANCHORING SYSTEM.

MAXIMUM PIER HEIGHT	28' WIDE UNITS 8' WALL HEIGHT		28' WIDE UNITS 9' WALL HEIGHT		32' WIDE UNITS 8' WALL HEIGHT		32' WIDE UNITS 9' WALL HEIGHT	
ANCHOR BOLT LOCATION	10"	12"	10"	12"	10"	12"	10"	12"
9 1/2"	6 ft.	6 ft.	6 ft.	6 ft.	5 ft.	5 ft.	5 ft.	5 ft.
25 1/2"	6 ft.	6 ft.	5 ft.	5 ft.	5 ft.	5 ft.	5 ft.	5 ft.
41 1/2"	5 ft.	5 ft.	5 ft.	5 ft.	5 ft.	5 ft.	5 ft.	5 ft.
57 1/2"	5 ft.	5 ft.	5 ft.	5 ft.	5 ft.	5 ft.	5 ft.	5 ft.
73 1/2"	5 ft.	5 ft.	5 ft.	5 ft.	5 ft.	5 ft.	4 ft.	4 ft.

TYPICAL TIEDOWN APPLICATION

(12/12, 99 1/2" I-BEAM SPACING W/ DIAGONAL SPACING)

FIGURE 9-13 & CHART 9-13

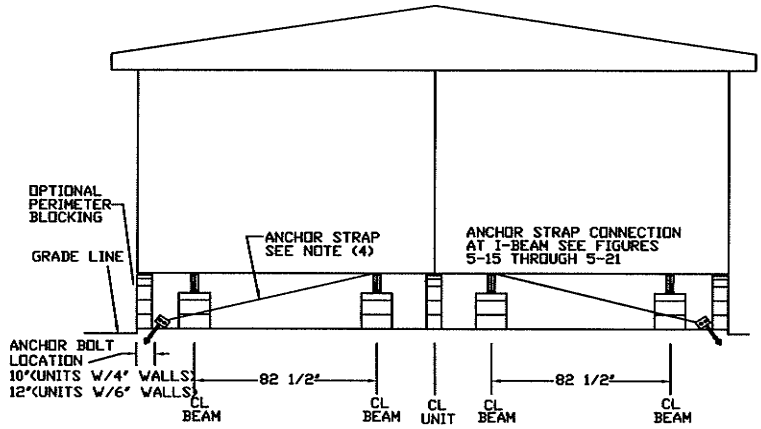

MAXIMUM ANCHOR SPACING (DIAGONAL) 82 1/2" I-BEAM CENTERS
ROOF SLOPE 12/12 ONLY

GENERAL NOTES

1. THE ANCHOR MUST BE MINUTE MAN OR EQUAL. ANCHOR AND ANCHOR HEAD MUST HAVE AN ULTIMATE STRENGTH EQUAL TO OR GREATER THAN 5202 LBS. FOR 23 & 24 WIDE, 6033 LBS. FOR 26, 27 & 28 WIDE AND 5925 LBS. FOR 32 WIDE.
2. ANCHOR BOLTS (REGARDLESS OF ZONING) MUST START NO FURTHER THAN 2'-0" FROM EACH END OF HOME.
3. IF ANCHOR IS INSERTED VERTICALLY A CONCRETE COLLAR OR STABILIZING DEVICE MUST BE USED AT THE GROUND LINE. SEE FIG. 9-15 AND 9-16.
4. EACH OF THE STRAPS AND CONNECTIONS TO THE I-BEAM MUST HAVE AN ULTIMATE STRENGTH OF 4725 LBS. SEE FIG. 9-15 AND 9-16.
5. REFER TO TABLE 9-14 FOR MAXIMUM STRAP SPACING FOR THIS ANCHORING SYSTEM.

MAXIMUM PIER HEIGHT	28' WIDE UNITS 8' WALL HEIGHT		28' WIDE UNITS 9' WALL HEIGHT		32' WIDE UNITS 8' WALL HEIGHT		32' WIDE UNITS 9' WALL HEIGHT	
ANCHOR BOLT LOCATION	10"	12"	10"	12"	10"	12"	10"	12"
9 1/2"	6 ft.	6 ft.	6 ft.	6 ft.	5 ft.	5 ft.	5 ft.	5 ft.
25 1/2"	6 ft.	6 ft.	5 ft.	5 ft.	5 ft.	5 ft.	5 ft.	5 ft.
41 1/2"	5 ft.	5 ft.	5 ft.	5 ft.	5 ft.	5 ft.	5 ft.	5 ft.
57 1/2"	5 ft.	5 ft.	5 ft.	5 ft.	5 ft.	5 ft.	5 ft.	5 ft.
73 1/2"	5 ft.	5 ft.	5 ft.	4 ft.	5 ft.	4 ft.	4 ft.	4 ft.

TYPICAL TIEDOWN APPLICATION

(12/12, 82 1/2" I-BEAM SPACING W/ DIAGONAL SPACING)

FIGURE 9-14 & CHART 9-14

EVOR F. JOHNS REGISTERED NO. 01666 STATE OF INDIANA PROFESSIONAL ENGINEER
12/17/08

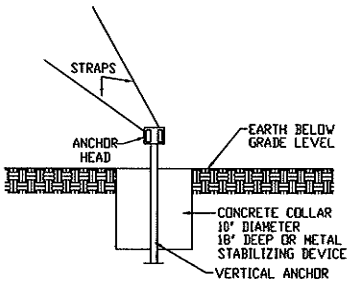

NOTES:
* THE TIE STRAP AND CONNECTORS MUST HAVE AN ULTIMATE STRENGTH MINIMUM OF 4725 LBS.

TYPICAL CONCRETE ANCHOR

FIGURE 9-15

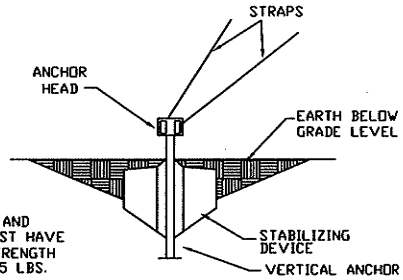

NOTES:
* THE TIE STRAP AND CONNECTORS MUST HAVE AN ULTIMATE STRENGTH MINIMUM OF 4725 LBS.

TYPICAL INTERIOR WALL CROSSOVER

FIGURE 9-16

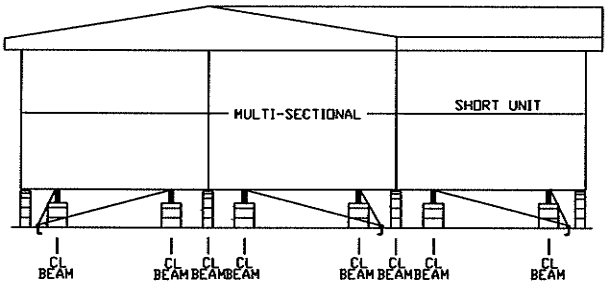

TYPICAL TIEDOWMS W/ ADDITIONAL FLOOR SECTIONS

FIGURE 9-17

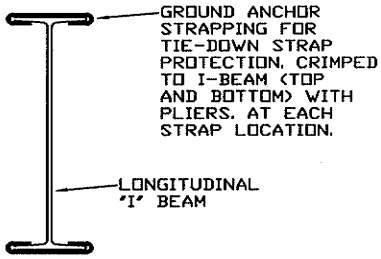

TYPICAL ANCHOR STRAP PROTECTION

FIGURE 9-18

NOTE:
ANCHOR BOLT ONLY TO BE USED WITH CONCRETE PAD. GROUND SCREW ANCHOR (SHOWN BELOW) IS TO BE USED FOR ALL OTHER APPLICATIONS FOLLOWING THE MANUFACTURER'S RECOMMENDATIONS AND CONTINGENT UPON LOCAL SOIL CONDITIONS

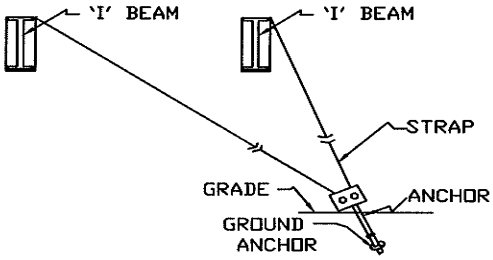

TYPICAL TIEDOWN

FIGURE 9-19

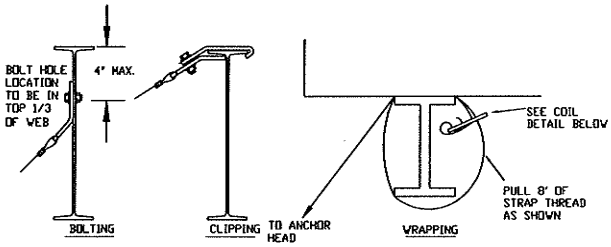

TYPICAL ANCHOR STRAP TO I-BEAM FASTENING

FIGURE 9-20

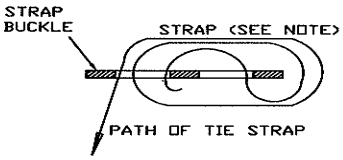

TYPICAL ANCHOR STRAP AT BUCKLE

FIGURE 9-21

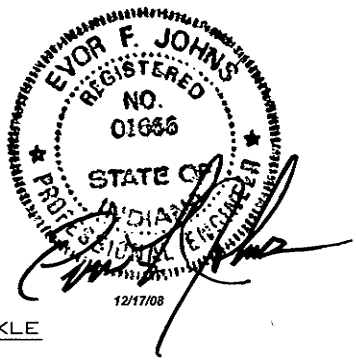

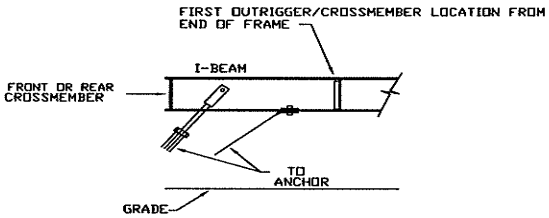

FOR WIND ZONE II ONLY

TYPICAL WIND ZONE II ANCHOR FASTENING

FIGURE 9-22

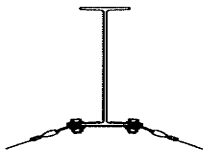

TYPICAL CABLE ATTACHMENT TO I-BEAM

FIGURE 9-23

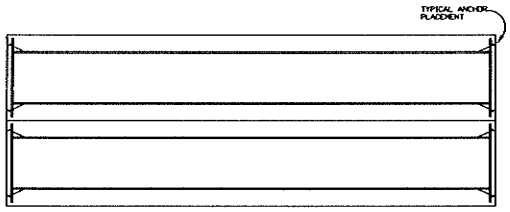

LONGITUDINAL TIE-DOWN SPACING FOR 23', 24', 26', 27', 28' AND 32' WIDE HOMES.

TYPICAL LONITUDINAL TIEDOWN SPACING

FIGURE 9-24

LONGITUDINAL TIE-DOWN SPACING FOR ROOF SLOPES LESS THAN 4.36/12 (20°) ONLY			
SIDEWALL HEIGHT	PIER HEIGHT	ANCHOR SPACING NOT TO EXCEED	
		ZONE-I	ZONE-II
7.5 FT	25 1/2 IN	13 FT	7.7 FT
7.5 FT	33 1/2 IN	12 FT	7.4 FT
7.5 FT	41 1/2 IN	12 FT	7.1 FT
7.5 FT	49 1/2 IN	11 FT	6.7 FT
7.5 FT	57 1/2 IN	11 FT	6.4 FT
8.0 FT	25 1/2 IN	12 FT	7.3 FT
8.0 FT	33 1/2 IN	12 FT	7.0 FT
8.0 FT	41 1/2 IN	11 FT	6.7 FT
8.0 FT	49 1/2 IN	11 FT	6.4 FT
8.0 FT	57 1/2 IN	10 FT	6.0 FT

TYPICAL LONGITUDINAL TIEDOWN SPACING

TABLE 9-15

LONGITUDINAL TIE-DOWN SPACING FOR ROOF SLOPES TO 5/12			
SIDEWALL HEIGHT	PIER HEIGHT	ANCHOR SPACING NOT TO EXCEED	
		ZONE-I	ZONE-II
7.5 FT	25 1/2 IN	12 FT	7.0 FT
7.5 FT	33 1/2 IN	11 FT	6.7 FT
7.5 FT	41 1/2 IN	11 FT	6.4 FT
7.5 FT	49 1/2 IN	10 FT	6.1 FT
7.5 FT	57 1/2 IN	10 FT	5.8 FT
8.0 FT	25 1/2 IN	11 FT	6.7 FT
8.0 FT	33 1/2 IN	11 FT	6.4 FT
8.0 FT	41 1/2 IN	10 FT	6.1 FT
8.0 FT	49 1/2 IN	10 FT	5.8 FT
8.0 FT	57 1/2 IN	9 FT	5.5 FT

TYPICAL LONGITUDINAL TIEDOWN SPACING

TABLE 9-16

EVOR F. JOHNS REGISTERED NO. 01666 STATE OF OHIO PROFESSIONAL ENGINEER 12/17/08

LONGITUDINAL TIE-DOWN SPACING FOR ROOF SLOPES TO 7/12		
SIDEWALL HEIGHT	PIER HEIGHT	ANCHOR SPACING NOT TO EXCEED
		ZONE-I
7.5 FT	18 IN	11 FT
7.5 FT	25 1/2 IN	10 FT
7.5 FT	33 1/2 IN	10 FT
7.5 FT	41 1/2 IN	9 FT
7.5 FT	49 1/2 IN	9 FT
7.5 FT	57 1/2 IN	8 FT
8.0 FT	25 1/2 IN	10 FT
8.0 FT	18 IN	10 FT
8.0 FT	33 1/2 IN	9 FT
8.0 FT	41 1/2 IN	9 FT
8.0 FT	49 1/2 IN	9 FT
8.0 FT	57 1/2 IN	8 FT

TYPICAL LONGITUDINAL TIEDOWN SPACING

TABLE 9-17

LONGITUDINAL TIE-DOWN SPACING FOR ROOF SLOPES TO 12/12		
SIDEWALL HEIGHT	PIER HEIGHT	ANCHOR SPACING NOT TO EXCEED
		ZONE-I
7.5 FT	18 IN	8 FT
7.5 FT	25 1/2 IN	8 FT
7.5 FT	33 1/2 IN	8 FT
7.5 FT	41 1/2 IN	7 FT
7.5 FT	49 1/2 IN	7 FT
7.5 FT	57 1/2 IN	7 FT
8.0 FT	18 IN	8 FT
8.0 FT	25 1/2 IN	8 FT
8.0 FT	33 1/2 IN	7 FT
8.0 FT	41 1/2 IN	7 FT
8.0 FT	49 1/2 IN	7 FT
8.0 FT	57 1/2 IN	6 FT

TYPICAL LONGITUDINAL TIEDOWN SPACIN

TABLE 9-18

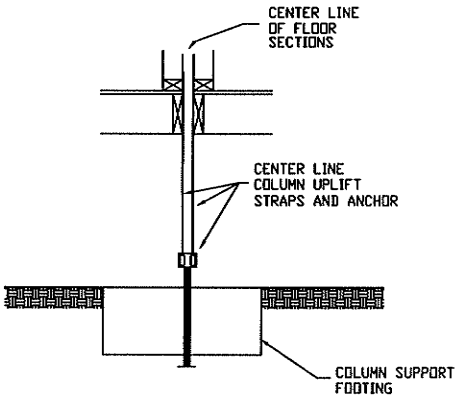

TYPICAL MARRIAGE LINE TIE DOWN

FIGURE 9-25

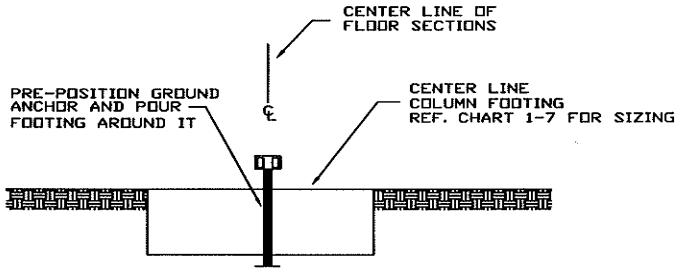

TYPICAL MARRIAGE LINE TIE DOWN

FIGURE 9-26

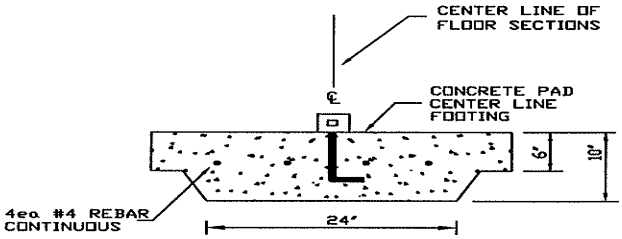

TYPICAL TIEDOWN FOOTER

FIGURE 9-27

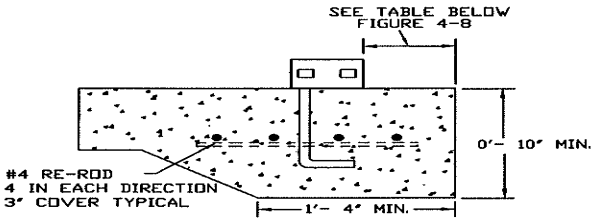

TYPICAL ANCHOR

FIGURE 9-28

EVOR F. JOHNS
REGISTERED
NO.
01655
STATE OF
INDIANA
PROFESSIONAL ENGINEER
12/17/08

Equipment, Options, And Connections

10-1 CENTRAL AIR CONDITIONING

If the home was not provided with an air conditioning or make-ready-for-air-conditioning option and air conditioning is to be installed consult the homes Comfort Cooling Certificate (included with the data plate) to determine whether the home has been constructed with an air distribution system designed for use with central air conditioning. If so, note the air distribution system's rated duct capacity (BTU/hr), any equipment sizing guidance provided by the manufacturer and information provided to calculate the home's heat gain.

NOTE: Oversized cooling equipment can lower energy efficiency, reduce comfort, and may cause moisture problems in the home including potentially damaging the homes structure.

Select equipment with a rated heating capacity (BTU/hr) not exceeding the maximum indicated on the home's data plate and a rated cooling capacity sized in accordance with Chapter 28 of the 1997 ASHRAE Handbook of Fundamentals or ACCA Manual J, Residential Cooling Load, 8th edition. Information needed to calculate the home's heat gain can be found on the home's comfort cooling certificate. Choose equipment with a minimum circuit amperage (found on the equipment rating plate) no greater than the branch circuit rating of the exterior air conditioning receptacle (indicated on the adjacent tag), if present.

NOTE: All air conditioning or heat pump equipment must be listed or certified by a nationally recognized testing agency for the application and be installed in accordance with its manufacturer's installation instructions.

10-2 SELF-CONTAINED AIR CONDITIONING OR HEAT PUMP UNIT

If a self-contained central air conditioning unit is to be used (separate from the furnace) an automatic damper to prevent cooled air from blowing up into the furnace will have to be installed in the furnace base. In addition, the ducts carrying cooled air from the air conditioning unit into the home and return air from the home to the air conditioning unit (See Figure 10-1), must contain dampers or be installed in such a way so that when the furnace runs, heated air does not circulate conditioned air through these ducts into the air conditioning unit.

Make certain that a combination heating/cooling thermostat is installed to prevent simultaneous operation of the furnace and the air conditioner.

Factory made HVAC ducts used to connect the appliance to the home must be listed by a nationally recognized testing agency. Where the ducts come within 2 feet of the outer casing of a heating or combination heating/cooling appliance they must be constructed of metal or be a listed Class 0 or 1 duct. Ducts applied to external appliances must be resistant to deteriorating environmental effects including, but not limited to ultraviolet rays, cold weather (minimum R 6 insulation), or moisture and must be resistant to insects and rodents.

The duct carrying cooled air from the air conditioner to the home should be connected to the bottom of the main duct located in the floor of the home. The connection should be located so that an equal number of floor registers are on each side of the connection. The floor joists within the floor of the home should not be notched or cut into in any way when installing the air conditioner supply duct.

A duct carrying return air from the home back to the air conditioning unit will be necessary. The return air register should be located so that air passage is not restricted, and it should be located between the floor joists within the floor. The floor joists must not be notched or cut into in any way when installing the return air duct.

The connection of the flexible duct to the heat duct within the floor sections of the home must be properly supported to avoid stress on the heat duct and the connection thereto. The flexible ducts must also be supported above the surface of the ground.

10-3 SPLIT SYSTEM AIR CONDITIONING UNIT

If a split system (a system having an A-coil in the furnace and an external condensing unit) is installed, it must be compatible and listed for use with the heating equipment installed in this home. It may be necessary to change the furnace blower when installing this type of system.

All condensate must be directed beyond the perimeter of the home by means specified by the equipment manufacturer.

10-4 AIR CONDITIONING POWER SUPPLY

NOTE: Electrical connections made to energize air conditioning equipment should be made only by qualified personnel. The completed installation must conform to article 440 of the national electric code and applicable local codes.

Branch circuits installed at the factory for the purpose of energizing air conditioning or heat pump equipment will have a junction box located on the bottom side of the home. An information tag will be placed on the side of the home adjacent to this box outlining the maximum full load ampere draw for the indicated branch circuit. In installing air conditioning or heat pump equipment, do not exceed the indicated circuit rating. See Figure 10-2.

When the electrical connection is made via a junction box beneath the home, the field installation wiring beyond the junction box must incorporate a fuse disconnect (size in accordance with NEC Article 440) located within sight of the condensing unit. The maximum fuse size to be used with the fuse disconnect is marked on the condenser data plate.

When the electrical connection is made for air conditioning or heat pump equipment for which a branch circuit was not provided at the time of manufacture of the home, the connection must be made via a branch circuit originating at a power source outside the home.

In all cases, the installation of air conditioning or heat pump equipment must be in accordance with the manufacturer's written installation instructions. The acceptability of the air conditioning equipment, rating and location of the disconnect, fused type branch circuit protection, and connections to the equipment are to be determined by the local inspection authorities.

10-5 FUEL BURNING APPLIANCES

All fuel burning appliances of the vented type except ranges and ovens must be vented to the exterior of the home. Upon completion the venting system must comply with the appropriate sections of the MHCSS. When the vent exhausts through the floor or the combustion air intake is below the unit, the vent and the intake must extend to the home’s exterior through any skirting or foundation wall that may be installed.

10-6 FIREPLACE OR WOOD STOVE

If the home is equipped with a built-in fireplace or wood stove, it will be necessary to complete the installation of the round top assembly, rain cap, spark arrestor, and chimney pipe above the roof.

NOTE: Remove protective materials covering the roof flashing and any foreign material from the installed part of the chimney.

Install the storm collar over the roof flashing. The storm collar must rest on top of the flashing spacers. Install the tabs through the slot on the opposite end of the storm collar and push storm collar down over the chimney so that it rests on the roof flashing. Pull the tab to tighten the storm collar against the chimney pipe. Seal top edge of storm collar with non-combustible waterproof sealant. Install remaining section of chimney pipe and contemporary cap. See Figure 10-3.

NOTE: The chimney outlet located inside the contemporary cap assembly must extend at least 3 feet above the point where the chimney exits the roof and be at least 2 feet above the highest point within of the roof or home 10 feet of the chimney. See Figure 10-4.

Do not attempt to use the fireplace or wood stove until the installation of the flue has been completed. Make certain that all the temporary weather protection has been removed and the pipe is open.

Follow the manufacturer's instructions provided with the fireplace to install chimney pipe connections along with general hints and maintenance to care for your fireplace.

Do not block any portion of the vented area of the round top assembly.

10-7 FURNACE VENT (roof jack)

The furnace vent may have been shipped with a removable crown to comply with transportation height requirements. A warning tag may be attached to the fuel supply line, the furnace, and the furnace thermostat, if

the furnace vent has a removable crown installed. The vent crown and instructions for its installation have been provided with the home.

WARNING! The furnace roof jack must be installed before the furnace is operated.

If the home has a high-efficiency furnace installed, the air intake pipe and the exhaust pipe may need to be extended to complete the installation. Piping assemblies have been provided (see figure 10-5) and are to be installed as follows:

1. Match air intake and exhaust pip assemblies to pipes extending above the roof surface. Exhaust pipe has a male end; intake has a female end. (coupler)
2. Make certain pipe ends are clean and free of burrs inside and outside at the mating surface.
3. Apply ABS pipe cement inside the hub and around the outside of the matching pipe.
4. Slip the pipe assemblies over the extensions, pressing down while applying a 1/4 twist until fully engaged and ending the twist in the desired position.

If this home is installed in an area which receives large amounts of snowfall, the flue piping on the furnace may need to be extended to ensure an adequate amount of combustion air. Flue pipe extensions are available from the furnace manufacturer and their service centers. To extend the flue, the termination cap is removed, the extension installed and the termination cap reinstalled. Exact instructions are supplied by the furnace manufacture with each extension and must be followed exactly.

10-8 OPTIONAL DRYER VENTING INSTALLATION

A gas or electric clothes dryer installed in the home must be exhausted to the outside by a moisture lint exhaust duct and termination fittings. See Figures 10-6, 10-7, and 10-8. Following the manufacturer's installation instructions and install the vent as follows:

1. Remove any temporary seals and duct caps from the vent rough openings.
2. Install ductwork using clamps between the dryer and the exhaust vent installed through the wall or floor of the home (do not use screws or other fasteners that penetrate into the duct).
3. Where the dryer exhaust was connected to a fitting in the floor the exhaust will need to be continued from beneath the home to the exterior side of the skirting or foundation wall.
4. Install ductwork using clamps (do not use screws or other fasteners that penetrate into the duct) and support the duct with metal straps connected to the floor joists or chassis at two feet o.c. or less. Ensure duct connections are internally overlapped to prevent inhibiting the flow of air and thereby causing lint accumulation.
5. Install an approved dryer vent cap with damper on the exterior termination of the duct. If the vent terminates at skirting, secure the cap to framing or skirting with sheet metal screws and seal edges with caulk or sealant. If the vent terminates through a wall, apply a bead of sealant to the back of the cap around the opening and secure with sheet metal screws to metal, hardboard or fiber cement siding or with wood screws to a mount block for vinyl siding.
6. Seal openings inside and outside of the home including at the floor, interior walls, siding and skirting (with caulk), and at the bottom board using tape specially made for that purpose.

WARNING! Dryer exhaust system must terminate beyond the edge of the foundation or skirting of the home, never inside or beneath the home. Use only metal or metal flexible duct; coiled wire covered with a plastic or foil material is unacceptable.

CAUTION: The factory-installed clothes dryer electrical circuit is supplied by a cable containing 4 electrical conductors and terminates with a 4-prong receptacle. Do not change the 4-prong receptacle to a 3-prong receptacle. Purchase a 4-prong appliance cord and install it on your dryer.

10-9 INSTALLATION OF ACCESSORIES

If additional decorative or functional accessories are to be attached to the home such as utility buildings, carports, skirting, and awnings, the following practices must be observed:

Read carefully and follow the instructions for any supplemental accessory, which are provided by the manufacturer of such accessory. Always check to determine that the installation conforms to applicable building codes.

If direct attachment to the home is necessitated, make certain that solid structural members are behind the attachment point. In the event a carport or awning is being installed, it should be attached only along the top of the wall or the edge of the roof. Proper size fasteners should always be used, and interlocking parts should be carefully fitted.

In installing carports, awning rails, or small storage buildings, select a unit that is designed with support columns, which will carry the weight of its construction. As little weight as possible should be attached to the home itself, usually only what is required to make a weather seal.

The foundation system for any structure attached to the home must be equal to the foundation system for the home. If the foundations are not equal, frost heave or settling could occur at different rates. This unequal movement can result in structural damage or lost weather seals, which will promote air and water infiltration.

All joints created by attaching accessories to the home should be properly sealed with weather-stripping and covered, if possible, with molding or flashing. Attaching fasteners should be caulked or sealed. All holes or openings necessitated in the walls or roof of the home should be covered and sealed to insure against leakage.

CAUTION: Modifications or alterations of your home may mar its appearance and weaken it structurally which could void the warranty rights.

10-10 LIGHT FIXTURE AND CEILING FAN INSTALLATION

Some light fixtures and ceiling fans may not be installed when the home is built because of possible damage to the fixture while the home is being moved. These fixtures include exterior lights, ceiling fans, and chain hung interior fixtures. When installed, all fixtures must be grounded either by a fixture mounting screw or a fixture-grounding conductor. In the case of a chain-hung fixture, both are required. Typical installations are shown in Figures 10-9, 10-10 and 10-11.

The mounting bracket for ceiling fans must not be fastened to the electrical box for support unless the electrical box is listed for that purpose and the total supported weight is not greater than 35 pounds. See Figure 10-12 for fan support independent of the electrical box.

Install exterior lighting fixtures as follows:

1. Remove the junction box cover
2. Inspect the flash ring, if installed, and replace as needed.
3. Pull the wires from the junction box and connect the fixture wires to them, white to white, black to black, and ground to ground.
4. Push the wires back into the box and mount the fixture making sure it is tight.
5. Seal the top and both sides, but not the bottom, to resist the entrance of water.

Install ceiling fans as follows:

1. Remove the junction box cover.
2. Pull the wires from the junction box and connect them to the fan wires in accordance with the fan manufacturer's instructions.
3. Push the wires back into the box and mount the fan canopy making sure it is tight.
4. Make certain that the trailing edge of the fan blades are at least 6 feet 4 inches above the finished floor.

10-11 EVAPORATIVE COOLERS

Some homes have been made ready for the installation of evaporative coolers. Although the roof structure has been reinforced a rigid base must be provided to distribute the cooler weight over multiple trusses to adequately support the unit. A capped duct opening to the interior is provided. The cooling unit must be installed per its manufacturer installation instructions and a water line with shut off valve provided. See Figure 10-13.

The electrical connection must be made at the junction box provided in the duct or on the roof (See Figure 10-14) in accordance with the requirements of the National Electric Code.

A water overflow hose must be provided to allow the water from the accumulation pan under the cooler coils a pathway away from the home. Do not allow the water to run across the roof and down the side of the home.

10-12 SKIRTING

Skirting is any structural or non-structural perimeter crawlspace enclosure. Skirting must not be attached in a manner that can cause water to be trapped between the siding and the trim or forced up into the wall cavities to which it is attached. Skirting must not be attached in a manner that impedes the contraction and expansion characteristics of the homes exterior covering.

Skirting must be of weather-resistant materials or provided with protection against weather deterioration at least equivalent to that provided by a coating of zinc on steel of not less than 0.30 oz per sq ft of surface coated. Skirting made from wood or wood products and used within six inches of the ground needs to be made of materials naturally resistant to decay and termite infestation or pressure be treated in accordance with AWPA Standard U1 for Use Category 4a, Ground Anchor Contact Applications.

10-13 RELOCATION OF HOME

In the event that the home is to be relocated, the installation process will need to be reversed to make the home ready for transportation. Earlier in this process, instruction was given to "take special note of temporary structural supports and bracing locations, as they must be reinstalled for any secondary movement." These supports and braces must be reinstalled for a proper secondary movement. Failure to do so could cause the structure of the home to be damaged.

Refer to the Homeowners Manual for more information on moving regarding the inspection of road gear, packing, overloading, and routing.

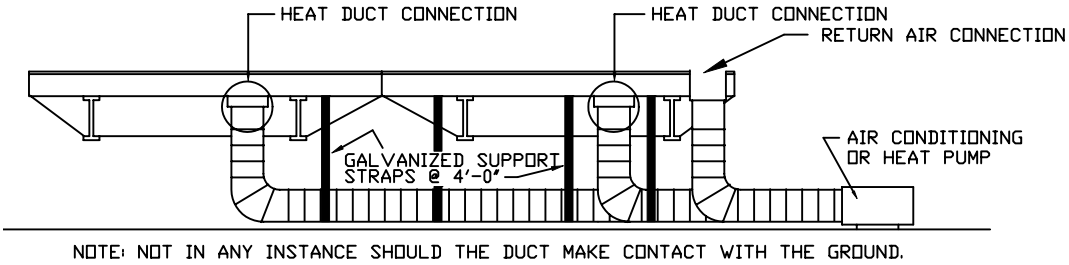

TYPICAL REMOTE AIR OR HEAT APPLICATION

FIGURE 10-1

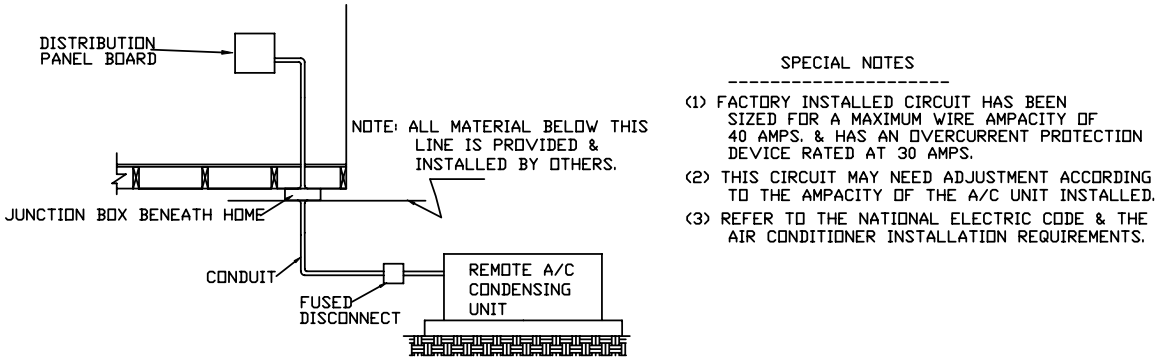

TYPICAL REMOTE A/C ELECTRICAL CONNECTION

FIGURE 10-2

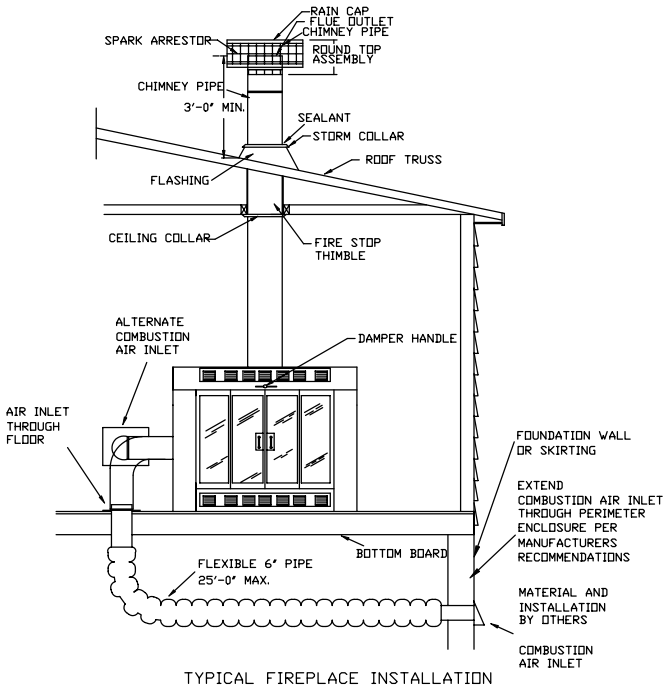

TYPICAL FIREPLACE INSTALLATION

FIGURE 10-3

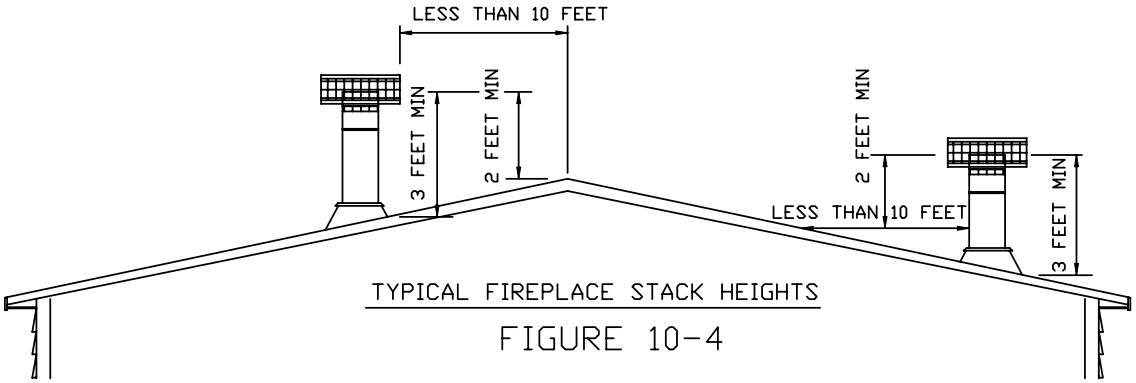

TYPICAL FIREPLACE STACK HEIGHTS

FIGURE 10-4

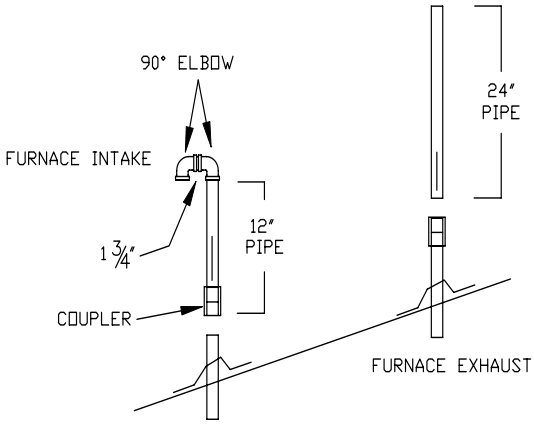

TYPICAL HIGH EFFICENCY FURNACE STACKS

(INTAKE & EXHAUST)

FIGURE 10-5

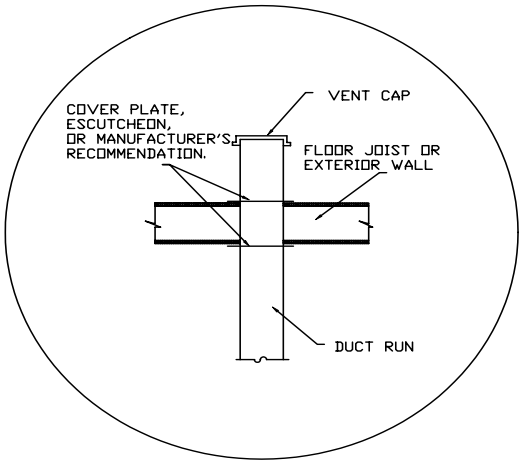

TYPICAL DRYER VENT

FIGURE 10-6

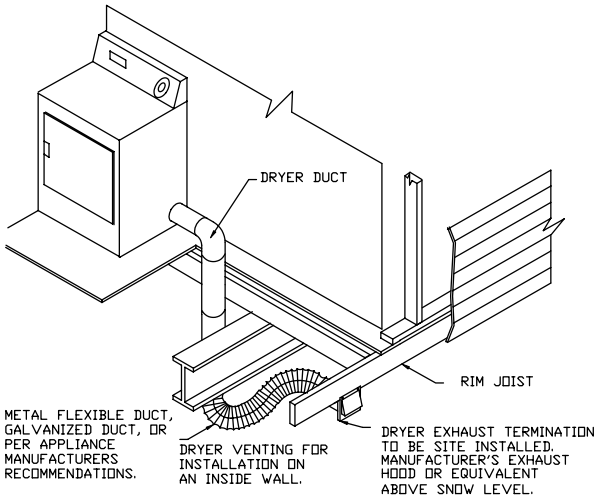

TYPICAL DRYER INSTALLATION
(THRU FLOOR APPLICATION)

FIGURE 10-7

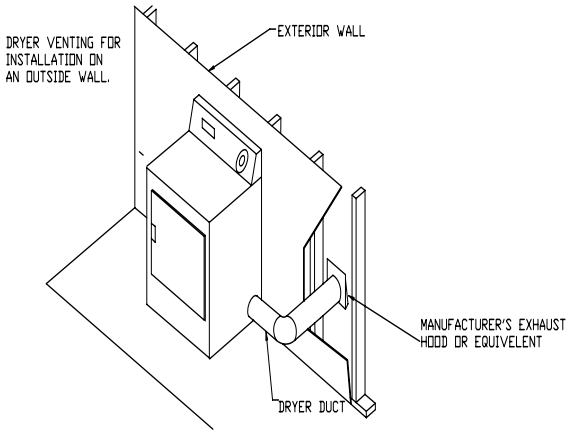

TYPICAL DRYER VENT INSTALLATION
(THRU EXTERIOR WALL APPLICATION)

FIGURE 10-8

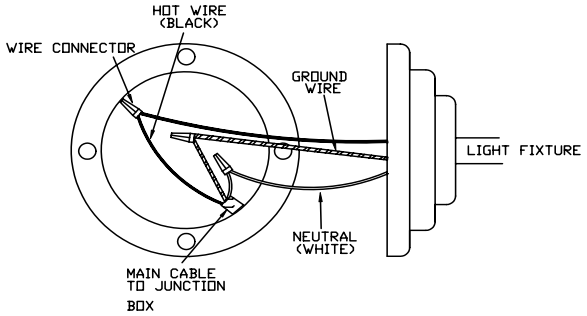

TYPICAL LIGHT FIXTURE WIRING

FIGURE 10-9

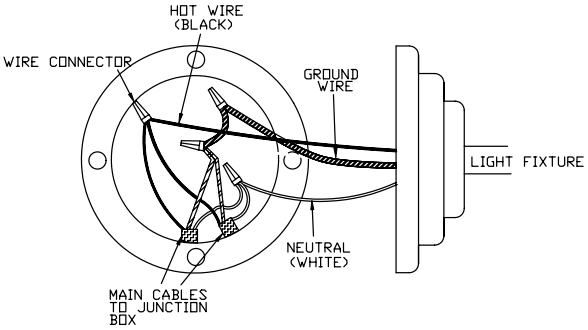

TYPICAL LIGHT FIXTURE WIRING

FIGURE 10-10

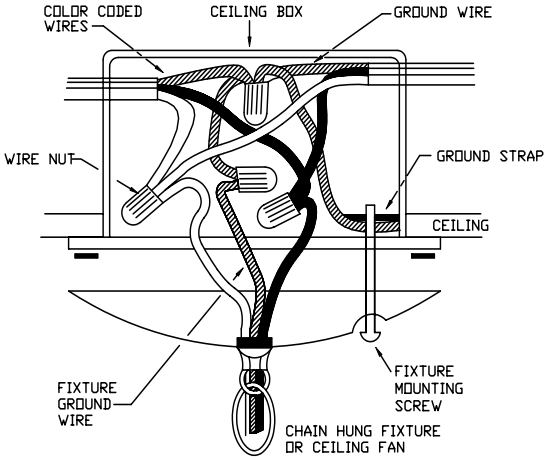

TYPICALCEILING FIXTURE

FIGURE 10-11

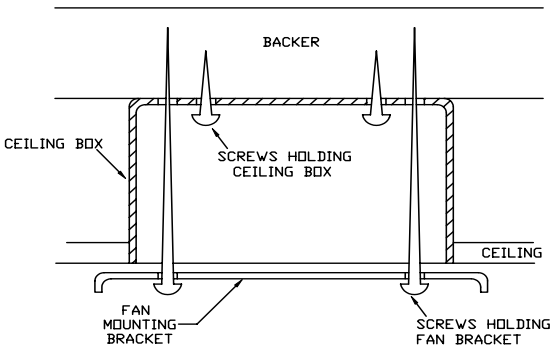

1. USE (2)TWO #8 SCREWS TO HOLD BOX TO BACKER.
2. USE (2)TWO #8 SCREWS TO HOLD BRACKET TO THE BACKER THROUGH THE BOX.
3. BOX MUST NOT SUPPORT BRACKET.
4. FAN BRACKET GROUND CONDUCTOR MUST CONNECT TO CIRCUIT GROUNDING CONDUCTOR.

TYPICAL CEILING FAN BOX

FIGURE 10-12

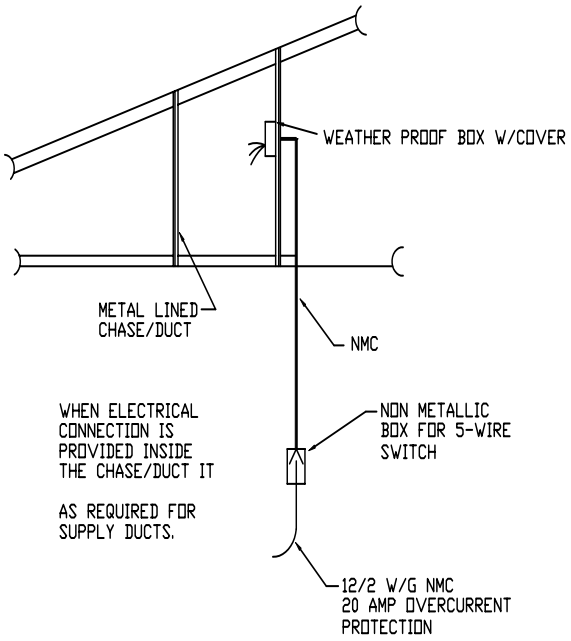

TYPICAL EVAPORATOR COOLER CONNECTION

FIGURE 10-13

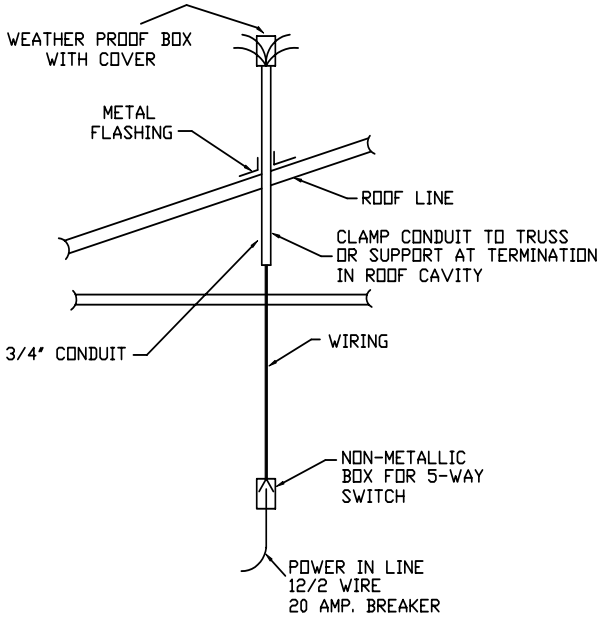

TYPICAL EVAPORATOR COOLER CONNECTION

FIGURE 10-14

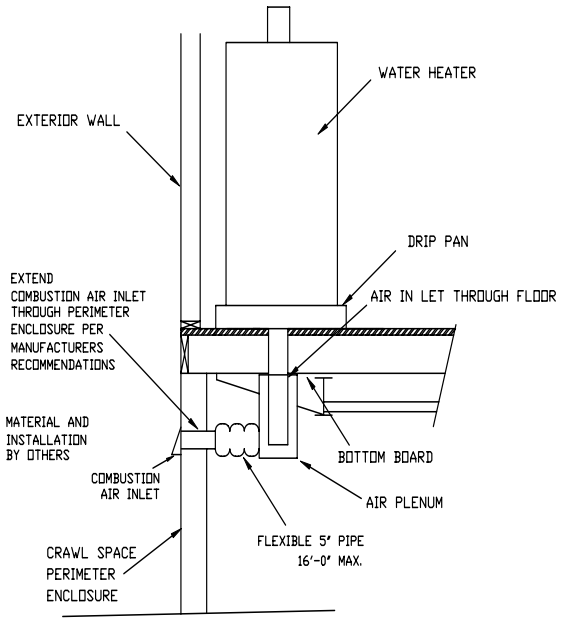

TYPICAL WATER COMBUSTION AIR

FIGURE 10-15

Installation Completion and Information

11-1 COMPLETION

After the home has been completely installed, a final inspection should be made to insure that no items have been overlooked which could cause a problem. Special emphasis should be placed on the items below.

11-2 EXTERIOR SIDING AND TRIM

A thorough check should be made of all portions of the exterior siding to make certain that it is not cracked or split, buckled, or loose in any manner. Any siding observed to be in this condition should be repaired or replaced. All fasteners that are loose should be retightened or replaced. All decorative trim pieces or molding strips, including molding along the edge of the roof, should have special attention to make certain there are no gaps or voids in the sealant tapes or caulking material. If any such places are observed, they should be resealed.

11-3 ROOF

The roof must be checked to make certain that all vent, flue and intake flashings are firmly in place and that the roof ventilators, flue pipes, exhaust vents, and air intakes have not become damaged or loosened in transit or installation. That any eave or gable extensions have been soundly installed and that any ridge vent and/or shingle ridge cap is firmly in place.

In certain areas of the shingled roof, protective materials may have been fastened in place to protect the shingles from the affects of transportation. When these materials have been removed, it will be necessary to remove all the fasteners and fill the resultant holes with asphalt plastic roof cement. Further, while it is recognized that the seal tabs on the shingles will need a few warm days to completely seal down, any problem area can be sealed by placing a small amount of asphalt plastic roof cement under each end of the tab and pressing down firmly.

11-4 CLEARANCES

If there are any low-hanging trees or bushes adjacent to the home, which could damage the exterior or the roof, they should be trimmed or cut accordingly. Future growth of these bushes or trees should be considered in connection with their possible movement during wind conditions or under snow or ice loads.

11-5 CAULKING AND/OR SEALERS

There are many good brands of caulking material and roof sealers, which can be purchased from local retail stores. Whatever brand of caulking and/or sealer is purchased the instructions regarding application should be read closely. This will include any special preparation of the surface to be coated. Observe the labeling on this material for any notes concerning resistance to running or streaking the sides of the home. This can be very unsightly and, in many cases, extremely difficult to remove. Special detergents or etching agents may be required in some cases to clean the metal surfaces on which caulking or sealers are to be applied. Again, the manufacturer's instructions should be followed to the detail to prevent damaging roof and side metals.

11-6 EGRESS WINDOWS

An egress window is provided for each bedroom and a label is located on the window to identify it and to provide opening instructions. The egress windows must be checked to assure that all shipping clips on screens, storm windows, and other appurtenances are removed so that quick and safe exit is possible. Check the window to assure it opens properly.

11-7 EXTERIOR DOORS AND STORMS

Exterior doors are provided with door plungers and chain stops. Doors must be checked to ensure that these items have been installed and adjusted.

11-8 WINTER PRECAUTIONS

In the event that the home is to be vacant during the winter months, care should be taken to ensure that adverse weather conditions will not damage your home.

Follow the procedures listed in the Utility Systems section to properly drain the water system and add antifreeze to your P-traps at all locations.

The heat should be left on to maintain a temperature that will not allow the build-up of moisture and the growth of mold. Moisture build-up can cause swelling or warping of materials and furnishings.

Provisions should also be made to inspect the home on a weekly basis to ensure that the skirting ventilators are open and not snow-covered or to remove any ice and snow build-up along the eaves. As stated in the Home Owners Manual this is to prevent the water created by melting ice and snow from backing up under the shingles or entering the home by other means.

11-9 HIGH WIND PRECAUTIONS

Homes located in Wind Zone II may occasionally be subjected to high winds. In the event of a high wind, protect the primary windows, patio doors and entrance doors against the pressures created by the high winds. If storm shutters have not been installed, these areas may be protected by a covering of plywood fastened to the wall studs, around the window or door frames with wood screws. Any joints in the plywood at patio door openings will need to be secured by fastening a 2 x 4 to each side of the plywood to stiffen the joint. When the plywood is removed the screw holes must be filled with a high quality silicone caulk. Such caulking is available at local retail stores.

Receiving devices, sleeves or anchors for fasteners to be used to secure shutters or other type of manufactured protective covers to the exterior walls at window and door locations have not been provided with this home.

When the wind force is high enough to require the protection of your windows and doors as described above; it is recommended that you seek shelter away from the path of the storm or in specifically designated shelter.

11-10 TELEPHONE AND CABLE TV

Telephone and cable TV wiring should be installed in accordance with the requirements of the LAHJ and the National Electrical Code, NFPA 70.

INDEX

INTRODUCTION

1-1 PREAMBLE……..1
1-2 IMPORTANT NOTICES……..1
1-3 SAFETY CONSIDERATIONS……2
1-4 FEDERAL PREEMPTION……...2
1-5 ENGINEER'S STAMP……..3
1-6 ALTERNATIVE FOUNDATION SYSTEMS……..3
1-7 DISPLAY AND STORAGE OF THE HOME……3
1-8 ABBREVIATIONS……4
1-9 DEFINITIONS……....4

PRE-INSTALLATION CONSIDERATIONS

2-1 LOCATE THE DATA PLATE……..7
2-2 CONFIRM WIND ZONE……..7
2-3 CONFIRM THERMAL ZONE……8
2-4 CONFIRM ROOF LOAD ZONE…….....9
2-5 CONFIRM THE HOME SITE……11
2-6 CHECK LOCAL CODES AND SECURE PERMITS……11
2-7 SUPPORT AND ANCHORING SYSTEMS……11
2-8 AREAS SUBJECT TO FLOODING…….....11

SITE PREPARATION

3-1 SITE SELECTION……..13
3-2 FIRE SEPARATION……13
3-3 SITE ACCESS……13
3-4 SITE PLAN……13
3-5 CLEAR AND GRADE THE SITE……..13
3-6 DETERMINE SOIL CONDITIONS……14
3-7 DETERMINE SOIL-BEARING CAPACITY AND FROST LINE……...……14
3-8 DETERMINE GROUND ANCHOR HOLDING CAPACITY……..15
3-9 GROUND MOISTURE CONTROL……..15

FOUNDATION SYSTEM

4-1 CLIMATIC CONDITIONS……...18
4-2 CRAWLSPACE VENTILATION……18
4-3 CRAWLSPACE ACCESS……..18
4-4 FOOTING PLAN……..18
4-5 POINT LOAD SUPPORTS……..18
4-6 DETERMINE POINT LOAD SUPPORT LOCATIONS……..19
4-7 DETERMINE POINT LOADS……19
4-8 FRAME SUPPORTS……...19
4-9 FRAME AND PERIMETER SUPPORTS……19
4-10 DETERMINE FRAME SUPPORT LOADS……19
4-11 SELECT FOOTING TYPE AND MATERIAL……20
4-12 FOOTING INSTALLATION……..20
4-13 MONOLITHIC SLAB……20
4-14 INSULATED FOUNDATION……21
4-15 PIER CONFIGURATION……..21
4-16 PIER DESIGN……..……..21
4-17 ALTERNATE SUPPORT……..22

INSTALLATION

5-1 PROPER ALIGNMENT……..38
5-2 POSITIONING AND BLOCKING……..38

5-3 HINGED ROOF DEPLOYMENT…….....38
5-4 RAISING THE HOME…….38
5-5 JACKING PROCEDURE……...39
5-6 CONSTRUCT PIERS…….39
5-7 LEVEL THE PIERS…….39
5-8 USING A LIQUID LEVEL……39
5-9 SET THE HOME……..40
5-10 ALIGN AND CONNECT……...……40
5-11 COMPLETE INSTALLATION……..41
5-12 CONSEQUENCES OF INCORRECT BLOCKING AND ALIGNMENT……..……..41
5-13 GROUND ANCHORING……..42
5-14 PRE-ANCHORING INSPECTION……..42
5-15 PORCHES AND DECKS……42
5-16 MASONRY FACED FIREPLACES……...42

CLOSURE

6-1 EXTERIOR CLOSURE……...47
6-2 HINGED ROOF KEYSTONE INSTALLATION……...47
6-3 EAVE CLOSURE……47
6-4 ROOF COVERING……..48
6-5 TRUSS WALL SUPPORT FOR HINGED ROOFS……48
6-6 BOTTOM BOARD CLOSURE……...48
6-7 EXTERIOR SIDING CLOSURE……49
6-8 INTERIOR CLOSURE……49

UTILITY CONNECTIONS

7-1 GENERAL……...54
7-2 WATER SYSTEMS……54
7-3 WATER SYSTEM TESTING……55
7-4 FREEZE PROTECTION FOR UNOCCUPIED HOMES……...55
7-5 WASTE DRAINAGE SYSTEM……..56
7-6 GAS SYSTEM CONNECTION……..……57
7-7 OIL SERVICE……...58
7-8 CROSSOVER DUCTS……...58

ELECTRICAL SYSTEM

8-1 ELECTRIC SYSTEM……..65
8-2 ELECTRICAL CONNECTION……..……65
8-3 ELECTRICAL CROSSOVERS……..66
8-4 TEST PROCEDURES ……..……66

GROUND ANCHORING SYSTEM

9-1 ANCHORING REQUIREMENT……73
9-2 ANCHOR LOCATIONS……..73
9-3 SIZING THE ANCHORS AND ANCHOR HEADS……73
9-4 ANCHORING EQUIPMENT……73
9-5 INSTALLATION……..74
9-6 ALTERNATE ANCHORING……..75
9-7 Roof Slope……...75

EQUIPMENT, OPTIONS, AND CONNECTIONS

10-1 CENTRAL AIR CONDITIONING……...86
10-2 SELF-CONTAINED AIR CONDITIONING OR HEAT PUMP UNIT……..86
10-3 SPLIT SYSTEM AIR CONDITIONING UNIT……86
10-4 AIR CONDITIONING POWER SUPPLY……..……87
10-5 FUEL BURING APPLIANCES……87
10-6 FIREPLACE OR WOOD STOVE……87

10-7 FURNACE VENT…….87
10-8 OPTIONAL DRYER VENTING INSTALLATION……..88
10-9 INSTALLATION OF ACCESSORIES……...88
10-10 LIGHT FIXTURES AND CEILING FAN INSTALLATION…….89
10-11 EVAPORATIVE COOLERS……..89
10-12 SKIRTING……..90
10-13 RELOCATION OF HOME…….90

INSTALLATION COMPLETION AND INFORMATION

11-1 COMPLETION……...94
11-2 EXTERIOR SIDING AND TRIM……..94
11-3 ROOF……..94
11-4 CLEARANCES……..94
11-5 CAULKING AND/OR SEALERS……94
11-6 EGRESS WINDOWS……94
11-7 EXTERIOR DOORS AND STORMS……..94
11-8 WINTER PRECAUTIONS……95
11-9 HIGH WIND PRECAUTIONS……..95
11-10 TELEPHONE AND CABLE TV……95

This page intentionally left blank.

R A D C O FEDERAL MANUFACTURED HOUSING CONSTRUCTION & SAFETY STANDARDS 08 APPROVED

12/3/2010

1110TRB

Copyright 2010 Friendship Homes of Minnesota, Inc. ©