EXECUTIVE OFFICES SUITE 116 4002 MEADOWS DRIVE INDIANAPOLIS, INDIANA 46205 317 545-6145

De Rose Industries, Inc.

FILE COPY

November 17, 1975

RJH 11-19-75

NO SPECIAL BLOCKING REQUIRED.

Building Code Division
Department of Administration
408 Metro Square Building
Seventh and Roberts Street
St. Paul, Minnesota 55101

Attention: Richard Hauck

Gentlemen:

Please find enclosed a copy of De Rose Industries' double wide procedures.

These procedures are also appropriate for single wides if portions pertaining to double wides only are bypassed.

Sincerely yours,

DE ROSE INDUSTRIES, INC.

John R. Stevens
Manager of Product Quality

JRS/hm
encl.

BUILDING CODE
NOV 19 1975
RECEIVED

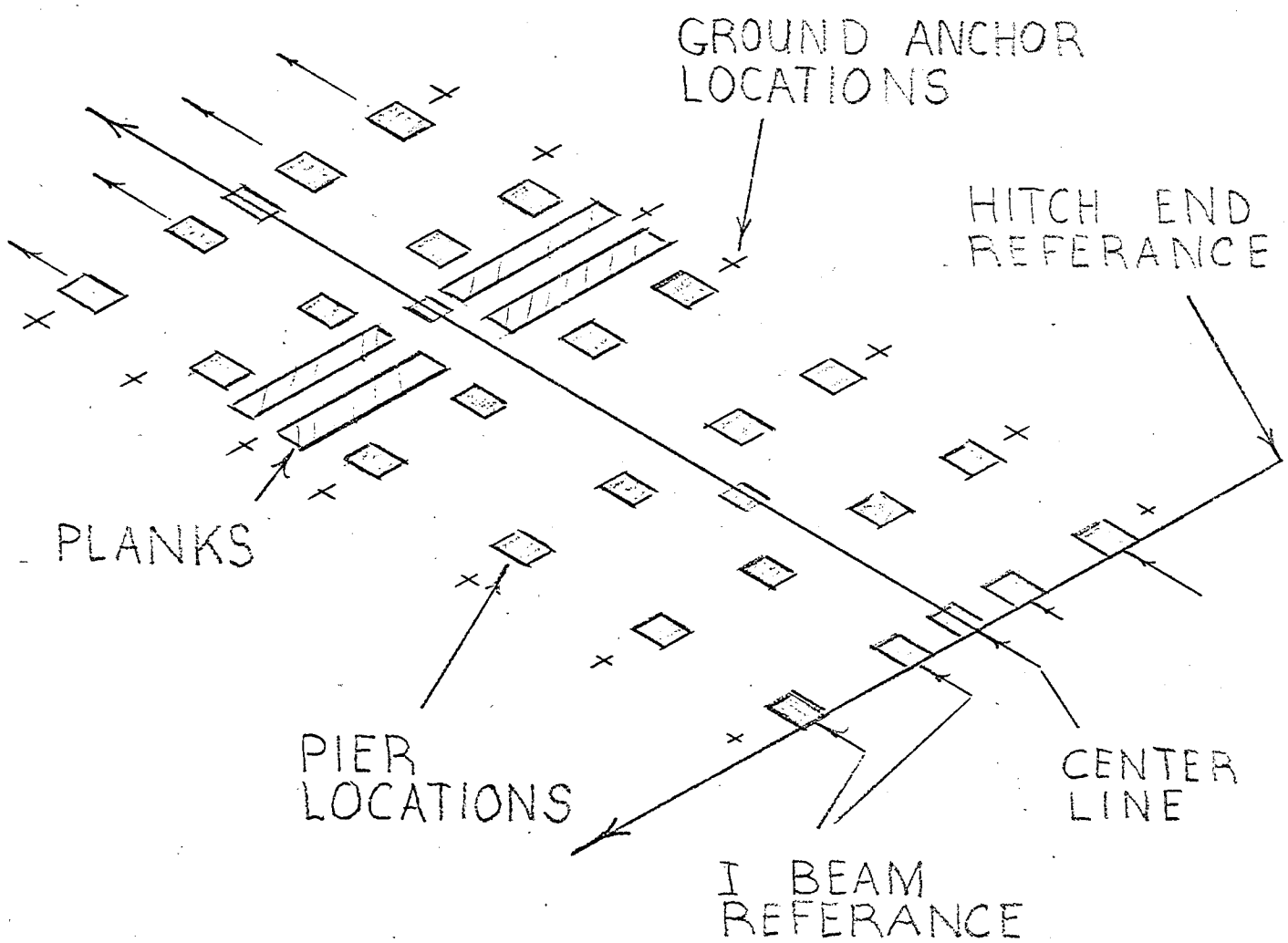

A. Establish Location For Unit

1. In relationship to utilities, establish location of hitch end of home.
2. Establish Center Line home at 90° to hitch end reference line.
3. Establish four reference lines for I-beams of home parallel to center line:
   a) Inside beams, 32" from center line
   b) Outside beam, 107½" from center line of home
4. Establish pier locations for I-beam piers (see pier location instuctions)
5. Establish front and rear center line pier locations.
6. Determine other center line pier locations, reference from hitch end of home by locating the white paint marks on floor frame.
7. At this time prepare the ground with proper footings as has been determined appropriate for your soil conditions.
8. Install ground anchors in the ground.

B. Side Movement Preparation

1. Place planking perpendicular to center line of unit between pier locations of "A" Section where tires will be located.

(Note: This doesn't exclude use of other side movement means available to you).

2. Coat planks with axle grease.

CAUTION: Don't use axle grease if there is a noticeable slope in the direction of the planking.

C. Position "A" Unit In Place

1. Position "A" Section hitch end on hitch end reference line.
2. Align "A" Section parallel to center line.
3. Pull "A" Section to center line.
4. Block Tires.

NOTE: This will be necessary only if the section is not adequately placed on the first pass with the truck.

D. Jack Up Front End

1. Before disconnecting from the tractor, place block under coupler jack.
2. Extend jack.
3. Disconnect from tractor.

E. Initial Level of Home

1. Place two jacks immediately behind wheels under I-beams. It will help if jack is not located directly under blocking position.
2. Raise jacks simultaneously to where unit appears level and tires are off ground.

CAUTION: Be sure jacks can support at least 14,000 lbs. (7,000 lbs. each).

F. Establish Initial Level of Home

1. Place carpenter's level lengthwise in the home halfway between wheels and coupler.
2. Using coupler jack, raise or lower unit until carpenter's level indicates level.

NOTE: The level used should be of the long 4 ft. to 5 ft. variety.

G. Position First Set of Piers

1. Place piers and blocking under hitch end at I-beam.
2. Place piers and blocking under blocking point established in front of wheels.
3. Leave jacks in place until Step H is completed. Block temporarily if jacks are needed at rear of section.

H. Leveling Rear of Section

1. Move carpenter's level to back bedroom.
2. Position jacks two feet in from end of I-beam; leave jack behind wheel in place until rear end of section is supported.
3. Jack up rear of section until level indicates level.
4. Place pier and blocking at rear of home.

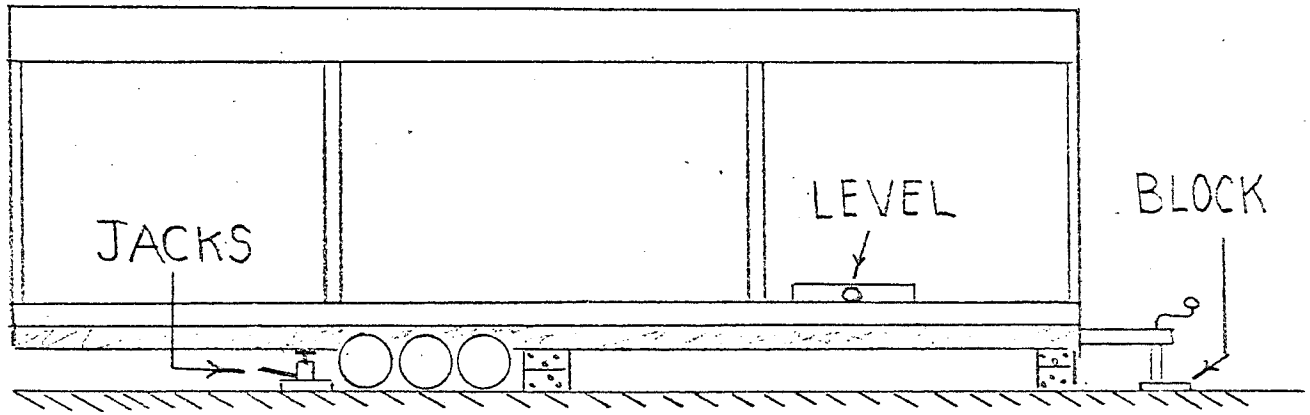

I. Check Door, Walls & Siding

1. Check doors for freedom of movement and proper engagement of latch.
2. Check exterior siding for separation, buckling, and bowing out.
3. Check interior walls for vertical seam separation symptoms.
4. Check for separation of partitions and walls from floor to ceiling.
5. Check panels for buckling. This should be done from Step "E" on. It may be necessary to utilize intermediate jacks to prevent panel popping, damaged doors, and wrinkled siding during initial set-up.

NOTE: Very few homes are built absolutely level. This is particularly true of a mobile home. The frame has been cambered up at points at the factory to prevent the floor from sagging. It also helps the unit to maintain a level appearance after it arrives at the site from its road trip. It is not necessary to level the unit perfectly and remove this camber. In fact, it is recommended that you do not remove it. Your doors, windows and siding were installed with camber there. To let it sag out will cause binding. A properly blocked home will appear level.

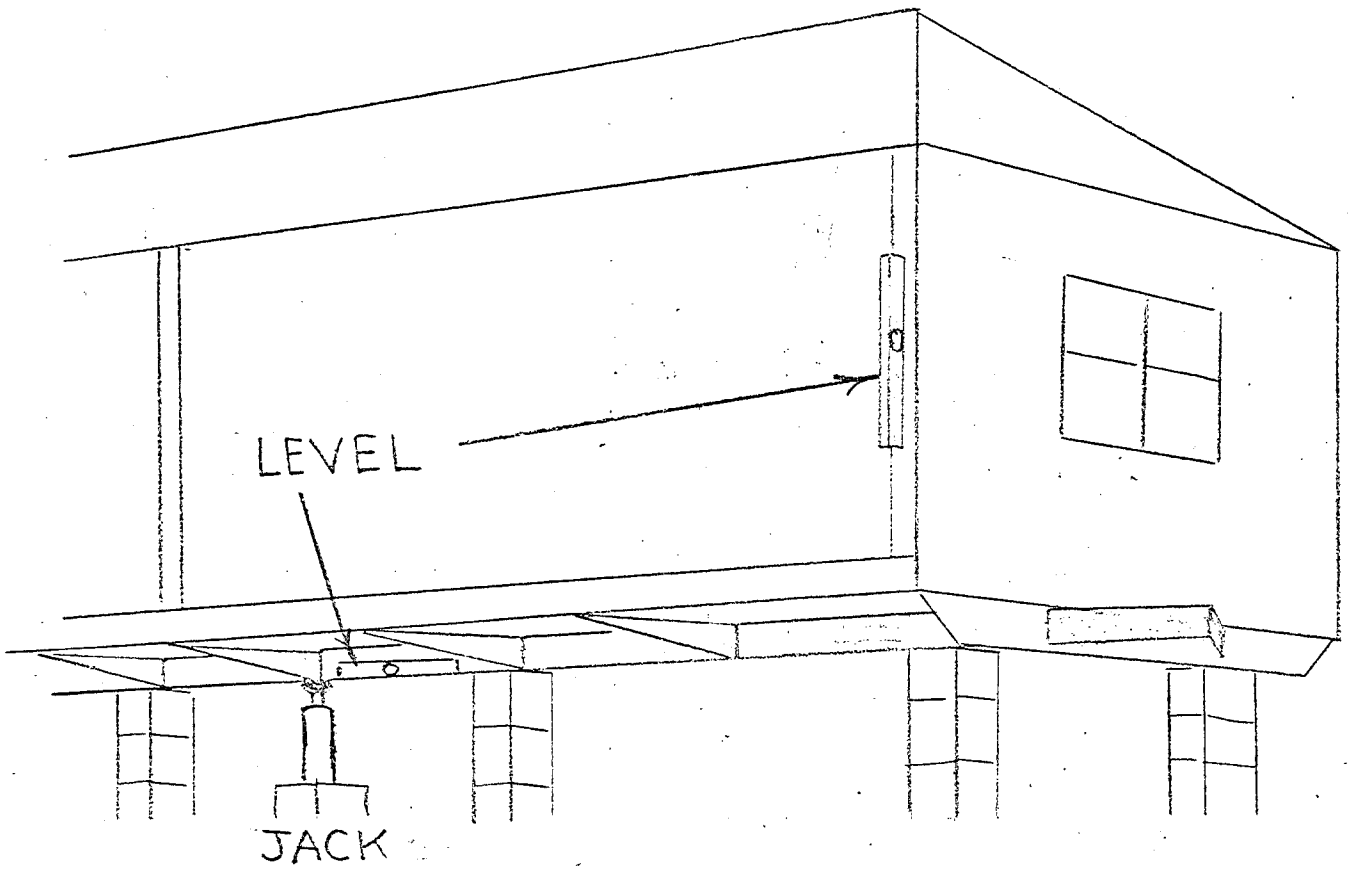

J. Levelling Unit Between Wheels & Hitch-End

1. Place level on flange of I-beam halfway between hitch and wheel area.
2. Use jacks to remove any sag introduced. You may delay this step until both halves are set to check the alignment of both halves and other visual effects.

K. Complete Blocking

1. Install remaining piers and blocking per pier location instructions.
2. Don't block the center line until the center wall vertical alignment has been checked.

L. Check Vertical Alignment

1. Check vertical alignment of unit at front wall center of unit and rear wall.
2. Jack the lower I-beam as necessary to obtain vertical alignment.
3. Check level of floor along the width.

M. Install Shims

1. Install shims at piers as necessary to maintain vertical alignment. Remove jacks.

N. Polyethylene Covering

1. Remove covering and scabing at this time if not already done. (both sections).
2. Don't remove the extra interior bracing in the section until such time as it is no longer required.
3. Remove any extra sheathing or metal strapping on sections.
4. Be sure all contact surfaces (roof, wall & floor) are clean and smooth (no protruding nails, blocks, etc.).

O. Position "B" Section In Place

1. Move "B" Section into position as close as possible with truck.

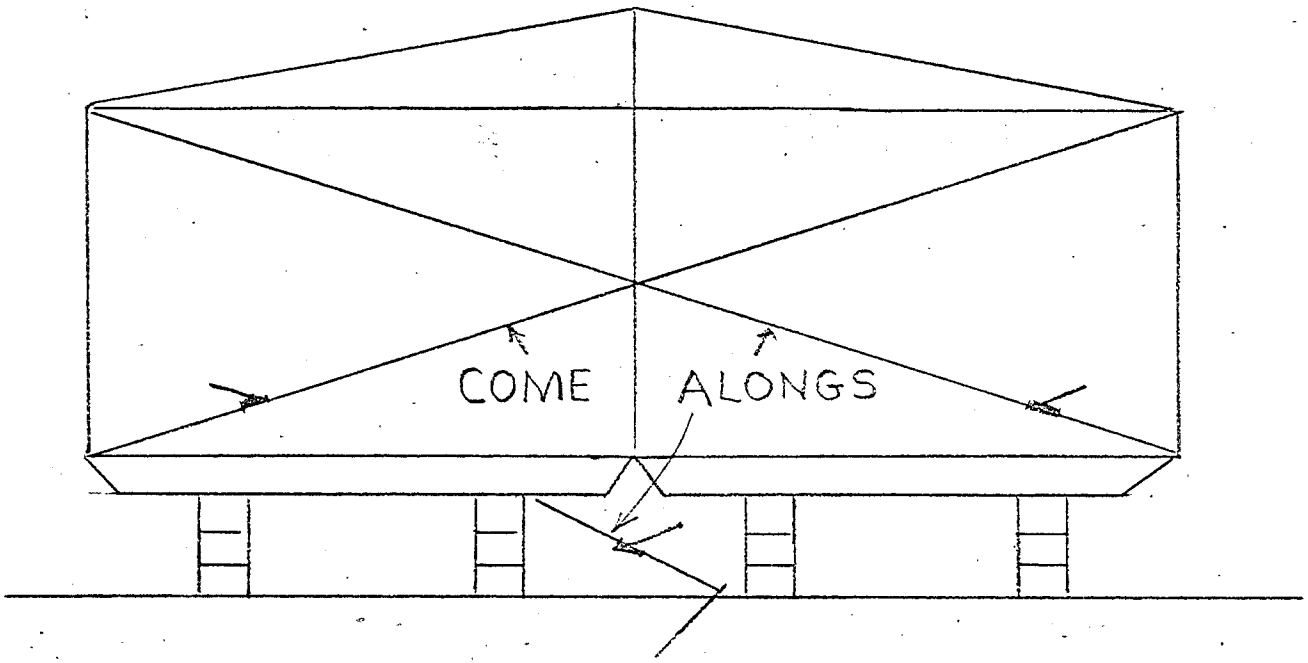

P. Final Hitch End Alignment

1. Final alignment of the two sections can be accomplished by attaching come-alongs to the truck and the "B" Section.
2. Block tires on "B" Section.

Q. Butting Halves Together

1. Using come-alongs anchored to the ground, not to "A" Section, pull the "B" Section to the "A" Section.

R. Levelling "B" Unit

1. Level "B" Section like "A" Section, Steps D through M.
2. Pay particular attention to the alignment of the two floors.
3. At this time you may need to initiate or re-do step J.

S. Closing Seam at Ridge Beam

1. Insure that floors butt against one another.
2. Install come-alongs at both ends so as each pull is pulling the end wall top of the opposite unit against the floor frame.
3. Utilizing both come-alongs simultaneously, pull the gap at the end wall and ridge beam closed.
4. Leave come-alongs in place until the structural connections are in place.

CAUTION: Don't pull any harder than is necessary to close the gap.

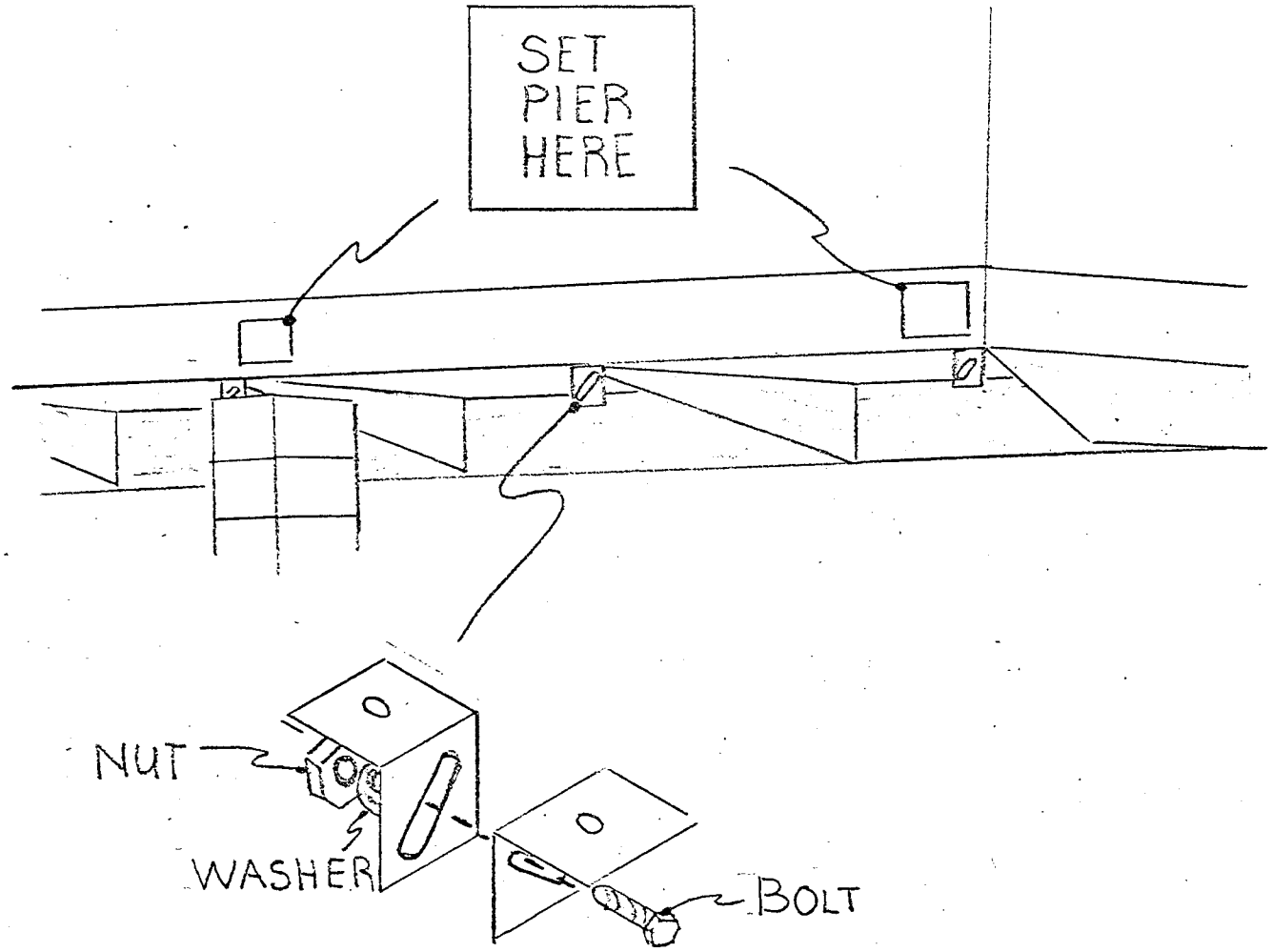

T. Connecting Floors

1. Every four feet connect floors together through the brackets attached, utilizing the 1/4" nut, bolt and lock washer.

U. Block Under Bearing Post

1. Place piers where indicated on center line of floor frame.

V. Sealing Floor Seam

1. Place insulation into center seam, if open.
2. With plywood stripping provided, close off the seam.

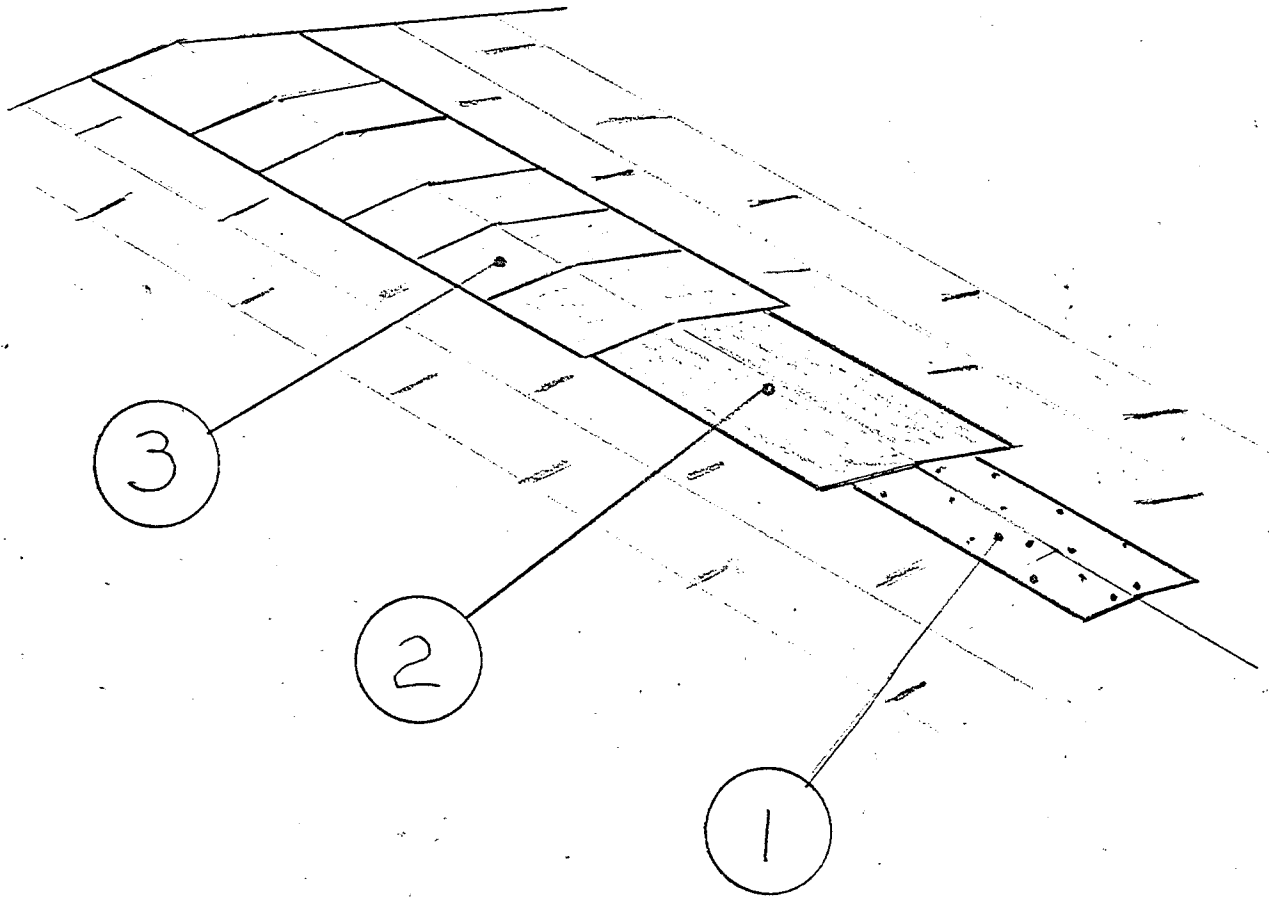

W. Install Ridge Cap

1. Use four rows of roofing staples spaced six inches apart.
2. Install 15 lb. black felt over ridge cap.
3. Install shingles as shown over felt.

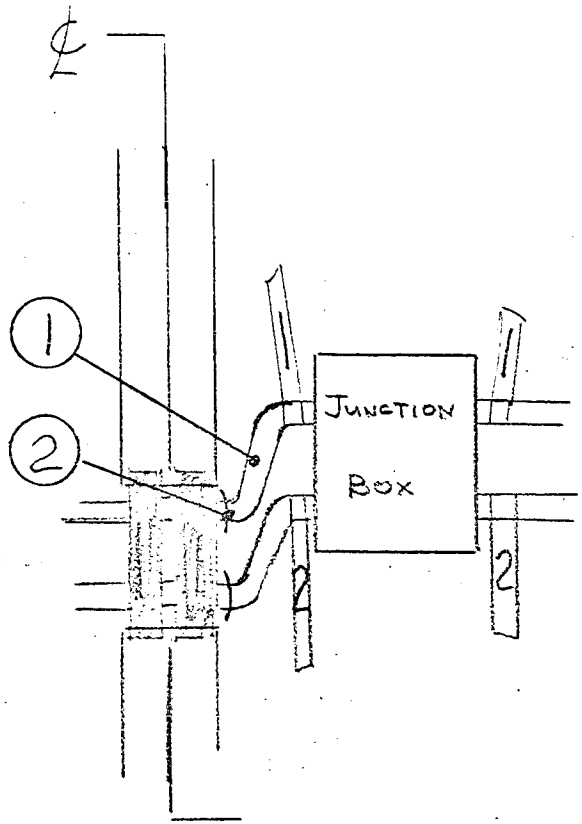

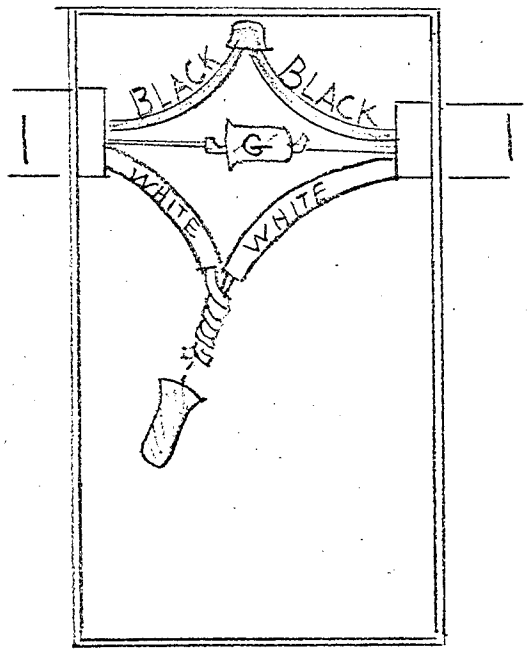

CONNECTING ELECTRICAL BETWEEN HALVES

1. Before closing up ends, take wire cables from the one half and route over to visible junction box by going behind the wire protectors.
2. Insert cables into junction box as much as possible.
3. Secure cables to stud as close to junction box as possible. Remove cover plate in exterior of home.
4. Connect cable 1 to cable 1 and cable 2 to cable 2.
   a) Leave about 4½ inches of cable in box
   b) Strip off about 4 inches of sheathing from cable. Sheathing should always extend into box.
   c) Strip 3/4" of insulation from conductors.
   d) Connect black to black by twisting the wires together with a right hand twist. Complete connections with proper splice cap.
   e) Connect white to white.
   f) Connect the bare ground wires with a copper splice cap.

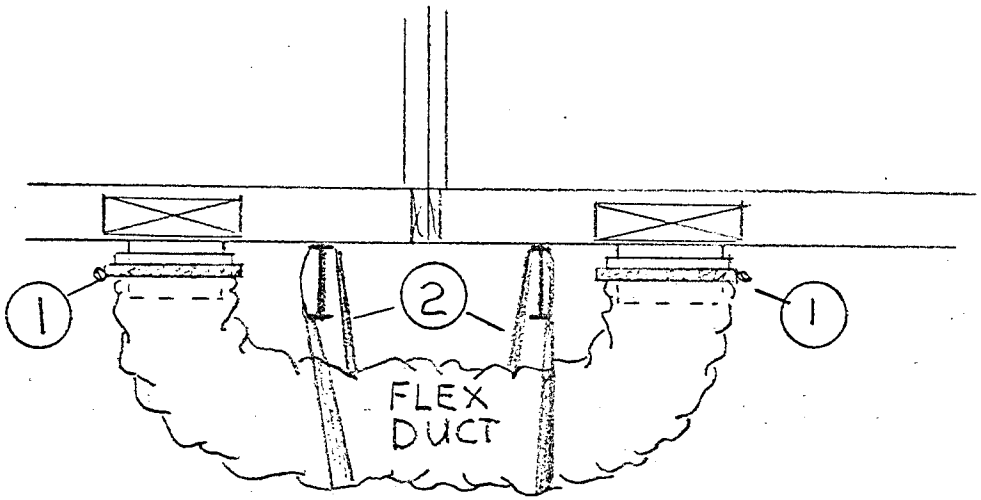

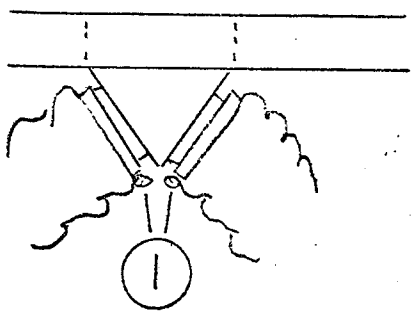

Y. CONNECTING HEAT DUCTS

1. After removing the dust covers from the heat ducts, take the flexible duct and connect to both halves using the draw bands.
2. Hang the duct from the chassis I-beam to hold duct off the ground.
3. On some models it will be necessary to hook the duct to a "V" Box under the furnace before connecting the two halves.

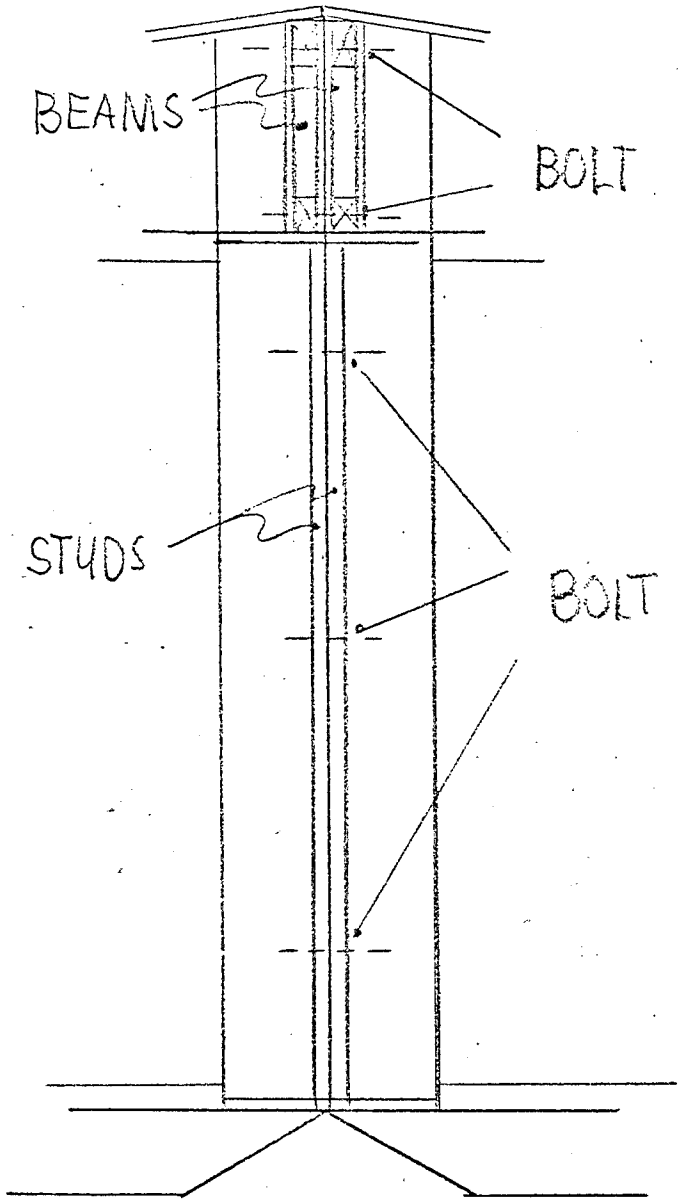

END VIEW

Z. CONNECTING END WALLS

1. Drill two 1/4 inch holes through ridge beam as indicated.
2. Install 1/4 inch carriage bolts.
3. Drill three 1/4 inch holes through joining studs from each half.
4. Install 1/4" carriage bolts.

AA. CLOSE END OF HOME

1. Cover seam with black felt paper or visqueen.
2. Install exterior siding and trim.
3. Caulk and seal as necessary.

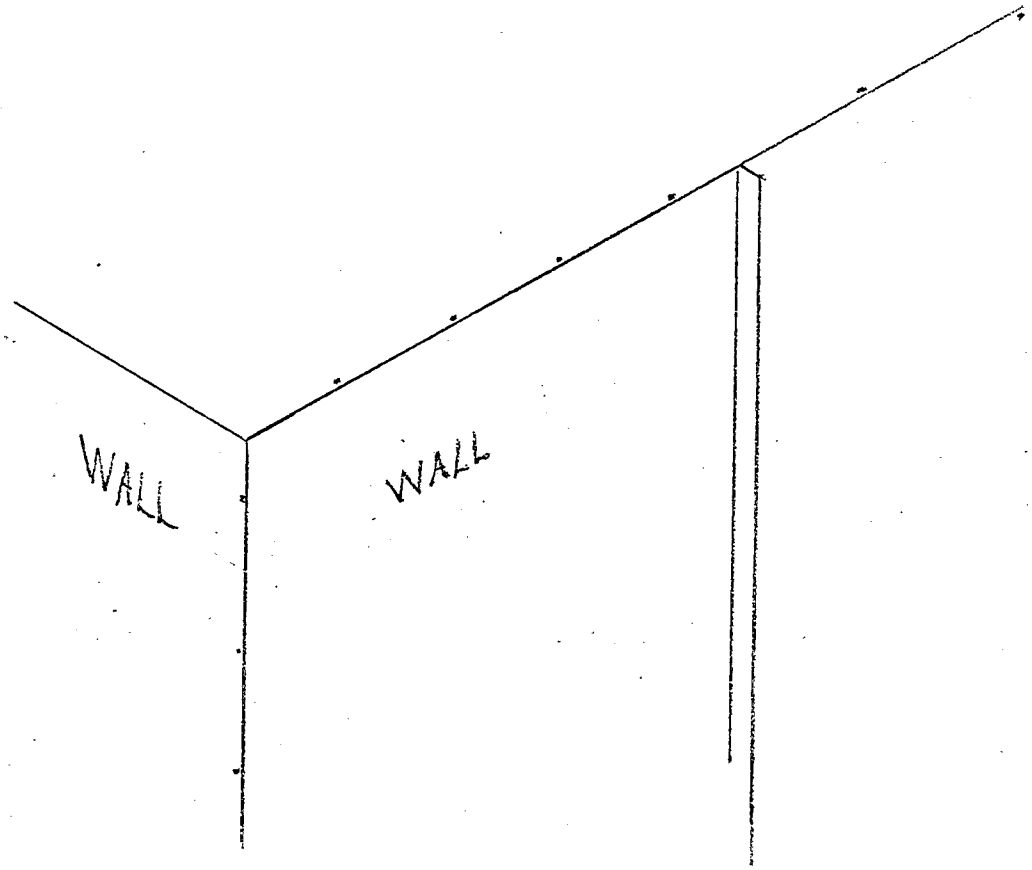

WALL CONNECTION

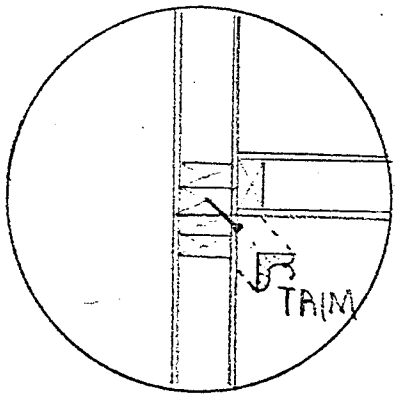

RIDGE BEAM CONNECTION

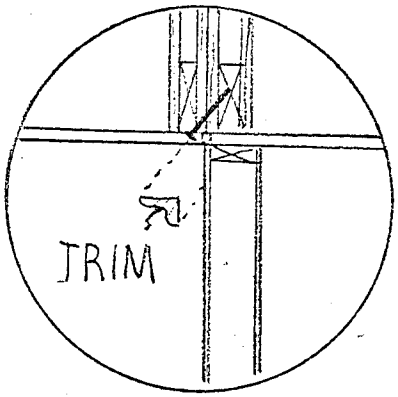

BB CONNECTING RIDGE BEAM INSIDE

1. Every 16 inches angle a 4-inch No. 8 wood screw into the ridge beams as shown in detail. Cover with appropriate trim.
2. An alternate method would be to do on top of the roof before installing ridge cap.

CC. CONNECTION WALLS

1. Pull connecting walls together using 2-1/2" No. 8 screw every 16 inches as shown. Cover with appropriate trim.

DD. CLOSING FLOOR SEAM

1. Close floor seam using carpet tape and carpet bar as necessary.

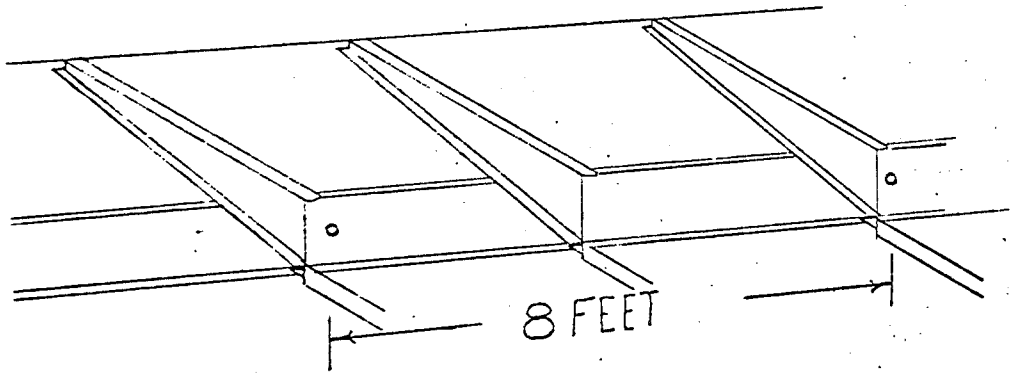

LOCATION OF TIE DOWNS

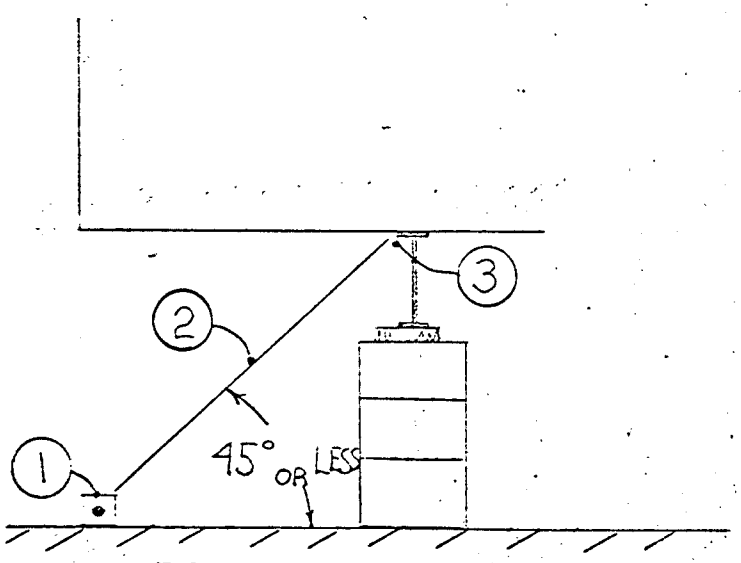

FRAME TIE

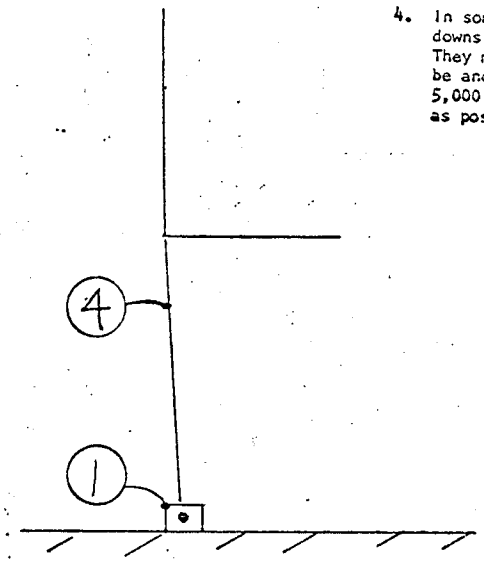

OVER ROOF TIE

TIE-DOWN INSTALLATION

The location of the required tie-downs can be determined from the position of the half-inch diameter holes in the I-beam. On single-wide homes it is necessary to secure both I-beams to the ground. On double-wides, it is necessary only to secure the outboard I-beam.

1. The ground anchor you have selected should be located so that the tie strap will be less than 45 degrees with the ground. It should be installed in the ground per the anchor manufacturer's instructions. The anchor should be compatible with the soil conditions.

2. The strap or cable you have selected should be certified as capable of sustaining a 5,000 lb. pull. In addition, any strap or cable should have weather resistance equal to Government Grade I Galvanized.

3. The strap or cable should be attached to the I-beam per the tie-down manufacturer's instructions.

4. In some locations it is mandatory that over-the-top tie-downs be provided. Where needed, they have been provided. They meet the standard outlined in Item 2. They should be anchored to a ground anchor capable of resisting 5,000 lbs. The strap should be kept as near vertical as possible.

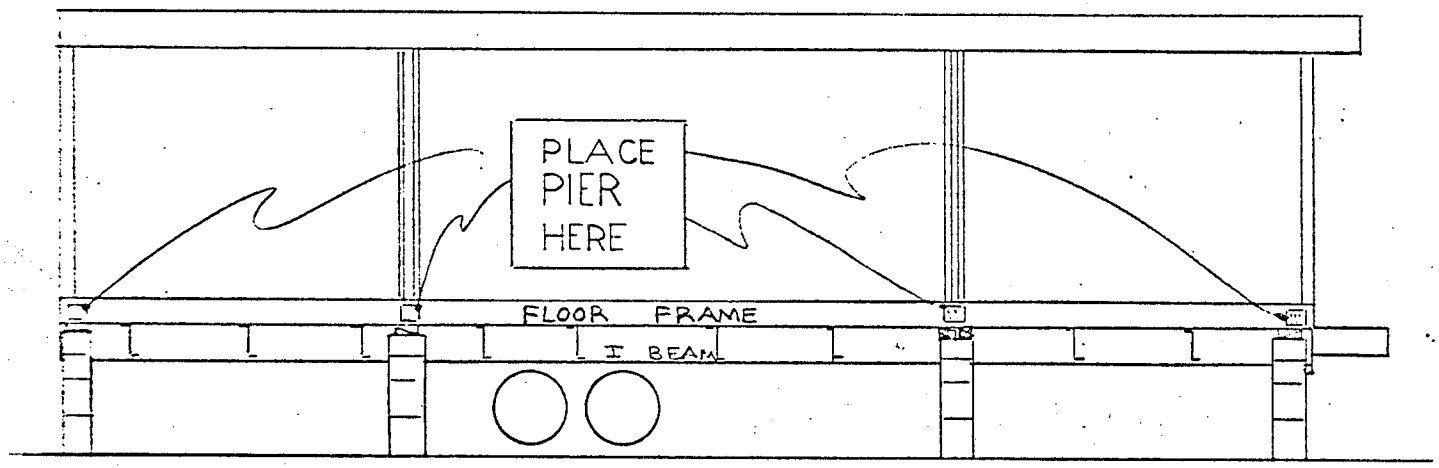

ADDITIONAL GROUND SUPPORT PIERS FOR DOUBLE-WIDES

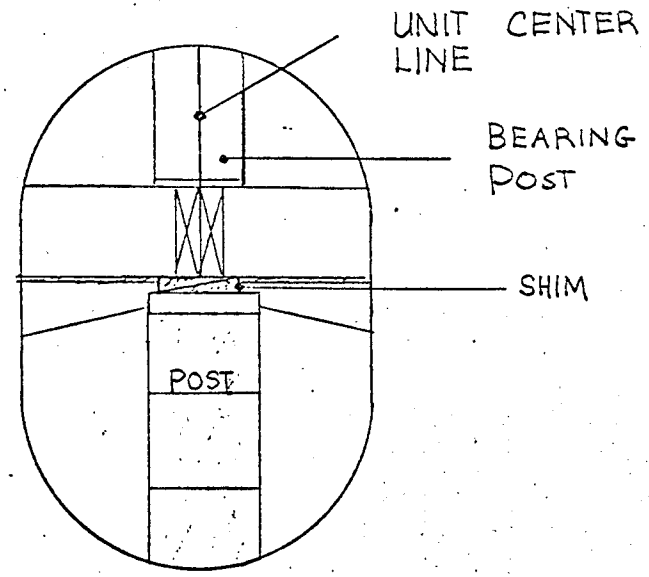

The center line of the two halves has several major bearing points which must be supported directly by a pier. These points are indicated on the floor frame with the sign indicated. These points should be identified and a corresponding spot prepared on the ground surface.

1. Set the post after the two halves have been joined.

2. Install shims in pairs as shown. Care is to be taken to achieve as much bearing as possible. Shims should be at least six inches wide.

3. In the event the bearing point is located directly over an outrigger, the bearing point should be shimmed on both sides of the outrigger.

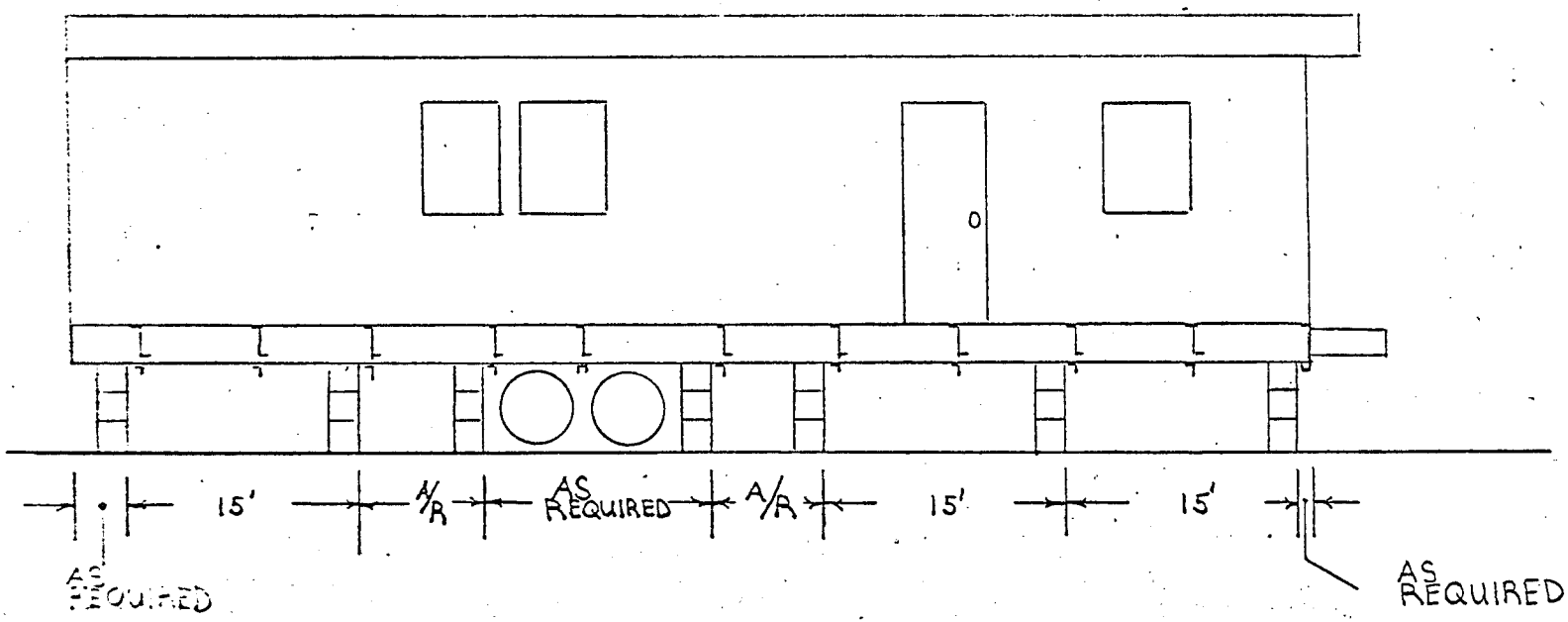

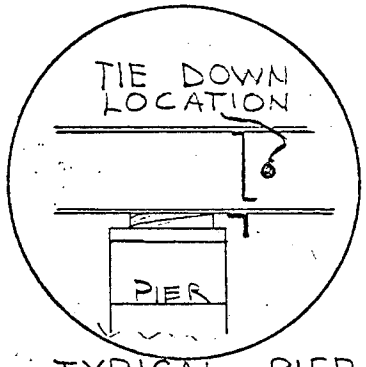

TYPICAL PIER PLACEMENT

PLACEMENT OF GROUND SUPPORT PIERS

1. Both I-beams are to be supported every 14 feet, minimum. The unit is to be blocked as close to the front and rear as possible. Block immediately in front of and in back of the spring hangers.

2. Piers should be set as close as possible to end outrigger crossmember yet not interfere with the installation of A-frame tie-down. See detail on placement.

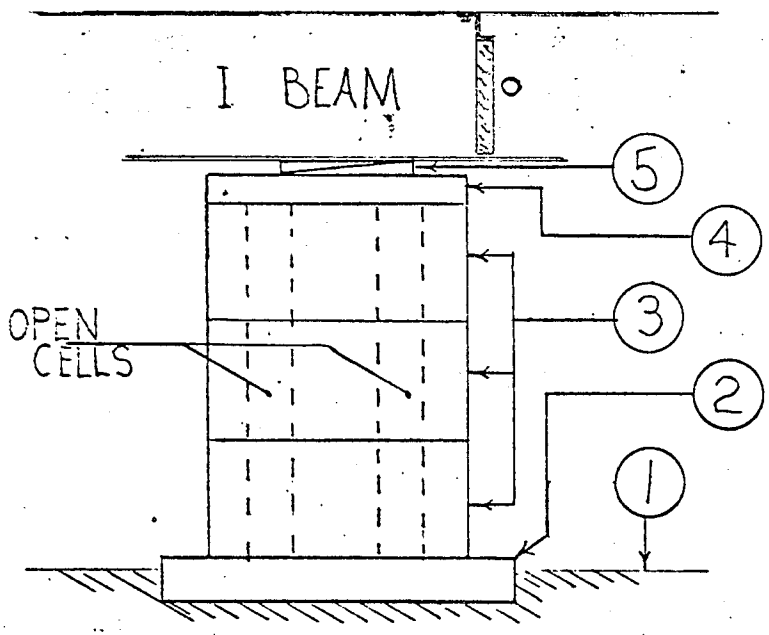

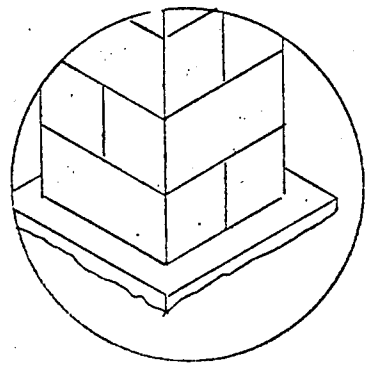

DETAIL DOUBLE STACKED PIER

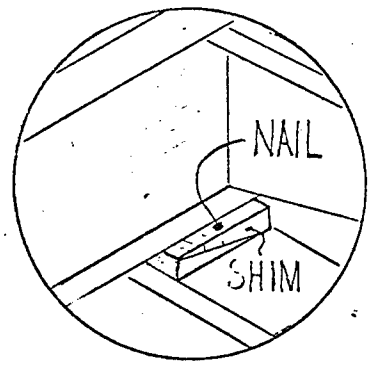

SHIM DETAIL

GROUND SUPPORT PIERS

Each pier must be capable of supporting 9,000 lbs. The details on this page are typical of a suitable ground support pier.

1. BEARING SURFACE: It is permissible to set the footing directly on the ground. First insure that all organic top soil is removed. Second, be sure that the ground is thoroughly compacted and not loose fill. If doubt exists as to the capacity of the soil to resist displacement when wet, then it is recommended that an excavation be made to below the frost line and a fill, such as pea gravel, be used.

2. FOOTING: A footing should be at least 2 ft. x 2 ft. x 4 inches thick, made from concrete. Other means of transferring the load from the post to the ground may be used if it can be demonstrated that there is equivalent performance.

3. POST: A suitable post can be made from 16-inch by 8-inch by 8-inch concrete blocks. The open cells should be aligned vertically. The height of such a post should be kept to four tiers. Up to five tiers can be used if a double post is built as shown. Posts over 4 feet in height should be avoided. Other posts, such as precast concrete or steel frames, may be used if they can be certified as capable of carrying 9,000 lbs. to the satisfaction of the authorities having jurisdiction over set-up.

4. POST CAP: If concrete blocks are used, a concrete cap 2 inches by 16 inches by 8 inches must be used. If other posts with a solid bearing surface are used, a cap is unnecessary.

5. SHIMS: To achieve final level of the home, shims may be necessary. They should be made from wood treated with creosote or other similar preservative. Shims should be installed in pairs positioned as shown in detail and nailed.