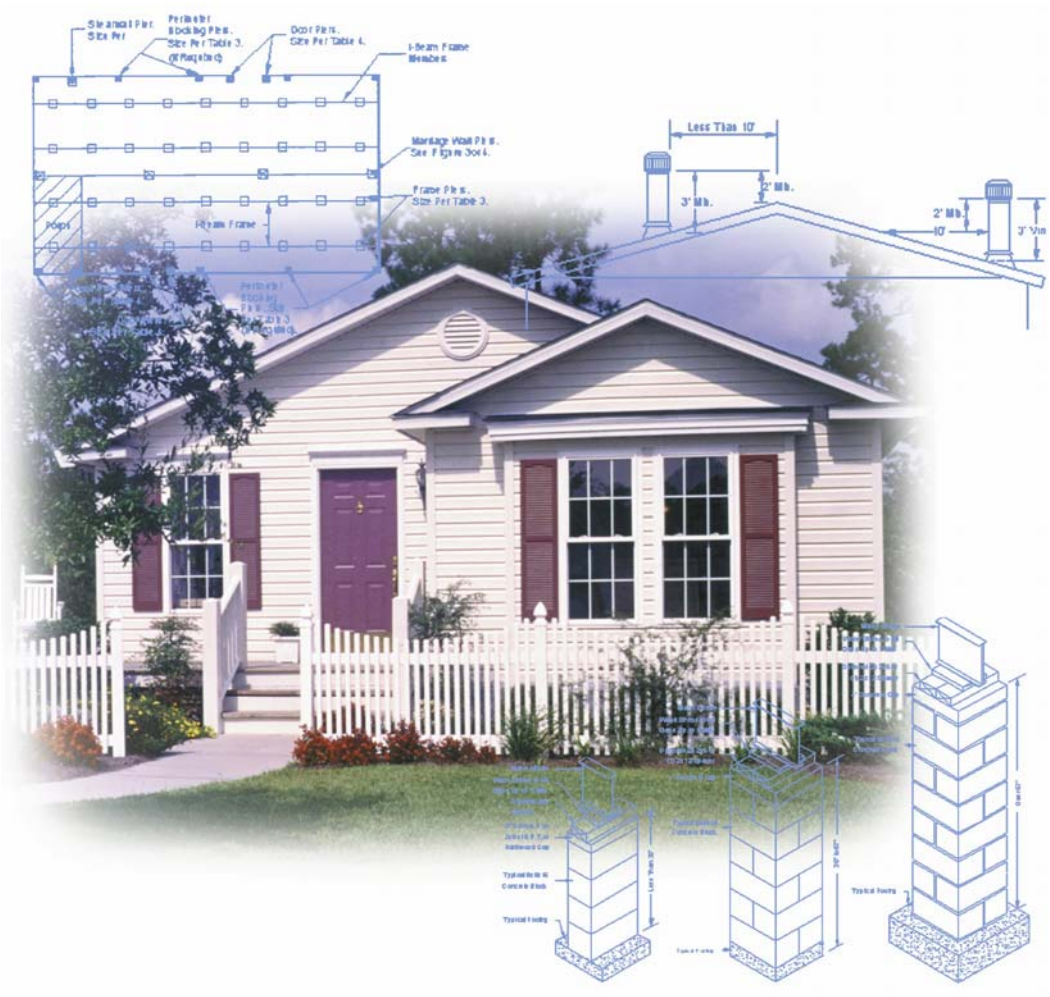

ADVENTURE HOMES

JULY 30 2009

INSTALLATION MANUAL

Table of Contents

Conforms to HUD MHCSS 8/10/09

INTRODUCTION 3
- IMPORTANT NOTICES 3
- SAFETY 3
- RESOURCES 3
- FEDERAL PREEMPTION 4
- DEFINITIONS 4
- ENGINEER'S STAMP 5
- SYMBOLS USED IN THE MANUAL 6
- ABBREVIATIONS 6
- ALTERNATIVE FOUNDATION SYSTEMS 6
- DISPLAY AND STORAGE OF THE HOME 6

GETTING STARTED 9
- STEP 1. LOCATE THE DATA PLATE 9
- STEP 2. CONFIRM WIND ZONE 9
- STEP 3. CONFIRM THERMAL ZONE 10
- STEP 4. CONFIRM ROOF-LOAD ZONE 11
- STEP 5. CHECK LOCAL CODES AND SECURE PERMITS 13

PREPARE THE SITE 14
- STEP 1. PLAN SITE ACCESS 14
- STEP 2. DETERMINE HOME LOCATION AND LAYOUT 14
- STEP 3. CLEAR AND GRADE THE SITE 15
- STEP 4. DETERMINE SOIL CONDITION 15
- STEP 5. DETERMINE SOIL-BEARING CAPACITY AND FROST LINE 16
- STEP 6. DETERMINE GROUND ANCHOR HOLDING CAPACITY 17

INSTALL FOOTINGS 19
- STEP 1. DESIGN POINT LOAD SUPPORTS 19
- STEP 2. DESIGN FRAME SUPPORTS (Homes without Perimeter Blocking) 21
- STEP 3. DESIGN FRAME AND PERIMETER SUPPORTS (Homes with Perimeter Blocking) 23
- STEP 4. SELECT FOOTING MATERIALS 25
- STEP 5. SIZE FOOTINGS 25
- STEP 6. INSTALL FOOTINGS 29

CONSTRUCT FOUNDATIONS 32
- STEP 1. OBTAIN A FOUNDATION DESIGN 32
- STEP 2. EXCAVATE 32
- STEP 3. CONSTRUCT THE FOOTING OR SLAB 32
- STEP 4. CONSTRUCT THE PERIMETER WALL 32
- STEP 5. INSTALL INTERIOR SUPPORTS 33
- STEP 6. WATERPROOF FOUNDATION WALL 33
- STEP 7. BACKFILL AND GRADE 33

SET THE HOME 34
- STEP 1. PREPARE FOR SET 34
- STEP 2. POSITION HOME SECTION 34
- STEP 3. LIFT HOME 34
- STEP 4. CONSTRUCT PIERS 36

COMPLETE MULTI-SECTION SET 40
- STEP 1. INSTALL MARRIAGE LINE ANCHORS 40

STEP 2. REMOVE PROTECTIVE SHIPPING MATERIALS 40
STEP 3. COMPLETE HINGED ROOF 40
STEP 4. REPAIR OR INSTALL MARRIAGE LINE GASKET 43
STEP 5. POSITION ADDITIONAL HOME SECTIONS 44
STEP 6. CONNECT FLOORS 45
STEP 7. CONNECT ROOF 46
STEP 8. CONNECT WALLS 49
STEP 9. ATTACH TAG UNITS 51
STEP 10. REMOVE TEMPORARY ITEMS 52
STEP 11. FASTEN HOME TO FOUNDATION 52
STEP 12. BACKFILL AND GRADE 52
STEP 13. BUILD STAIRS 52

COMPLETE ROOF AND EXTERIOR WALLS 53
STEP 1. COMPLETE ROOF 53
STEP 2. COMPLETE TAG UNIT ROOF 55
STEP 3. COMPLETE SIDE WALLS 57

CONNECT CROSSOVERS 58
STEP 1. CONNECT DUCTS 58
STEP 2. CONNECT ELECTRICAL CROSSOVERS 60
STEP 3. INSTALL ELECTRICAL BONDING 61
STEP 4. CONNECT WATER LINES 62
STEP 5. CONNECT DRAIN, WASTE, AND VENT LINES 62
STEP 6. CONNECT GAS LINES 64
STEP 7. CONNECT TELEPHONE AND CABLE TV WIRING 64

COMPLETE THE INTERIOR 65
STEP 1. ALIGN MARRIAGE WALLS 65
STEP 2. FINISH GYPSUM BOARD 65
STEP 3. COMPLETE WALL AND CEILING FINISHES 65
STEP 4. COMPLETE CARPET 66
STEP 5. COMPLETE TRIM 66
STEP 6. INSTALL SHIP LOOSE ITEMS 66

INSTALL STABILIZING SYSTEM 67
STEP 1. DETERMINE ANCHOR LOCATIONS 67
STEP 2. DETERMINE TIE-DOWN CONFIGURATION 73
STEP 3. SELECT ANCHORS 73
STEP 4. INSTALL ANCHORS 74
STEP 5. INSTALL STRAPS 75
STEP 6. TIGHTEN AND ADJUST STRAPS 78

CONNECT UTILITIES 79
STEP 1. CONNECT ELECTRICAL SERVICE 79
STEP 2. CONNECT WATER SERVICE 82
STEP 3. CONNECT GAS SERVICE 85
STEP 4. CONNECT OIL SERVICE 86

PREPARE APPLIANCES AND EQUIPMENT 88
INSTALL AIR CONDITIONER OR HEAT PUMP 88
PREPARE HEATING SYSTEM 89
INSTALL REMOTE HEATING AND COOLING EQUIPMENT 89
PREPARE VENTILATION SYSTEM 90

PREPARE FUEL-BURNING APPLIANCES 90
PREPARE SMOKE ALARMS 92
PREPARE FIREPLACES 92
PREPARE KITCHEN AND BATH APPLIANCES / FIXTURES 94
INSTALL EXTERIOR LIGHTING 95
INSTALL CEILING FANS AND LIGHTING 95
TEST ELECTRICAL SYSTEM 96

COMPLETE EXTERIOR WORK 97
STEP 1. REPAIR AND SEAL BOTTOM BOARD 97
STEP 2. INSTALL GROUND MOISTURE RETARDER 97
STEP 3. INSTALL SKIRTING 98
STEP 4. ASSEMBLE OPTIONAL WIND PROTECTION SHUTTERS 99
STEP 5. COMPLETE SITE-BUILT STRUCTURES 100

PREPARE HOME FOR OCCUPANCY 101
STEP 1. VERIFY ALTERNATIVE CONSTRUCTION (A/C) INSPECTION 101
STEP 2. COMPLETE INSPECTION CHECKLIST 101
STEP 3. COMPLETE ENERGY STAR CHECKLIST 101
STEP 4. CLEAN THE HOME 101

COMPLETE INSTALLATION CHECKLIST 102

Using the Manual

This manual is organized into a series of steps that will take you through the entire installation process using only those pages required for the specific home being installed. First, review the entire manual, including the Introduction chapter. As you read it, identify sections of the manual that you will need; identify other documents or information you will need; construct lists of tools and materials required for your particular installation; and make sure you have everything you need before starting work.

After reviewing the entire manual, refer to the sequence of installation steps in the table below. Identify the pathway for your installation and follow the arrows downward. Select either **Single Section Home** or a **Multi-Section Home** and choose the column corresponding to the home's foundation type, either **Pier and Ground Anchor** or **Load-Bearing Perimeter Wall** (see **Definitions**, p. 4). Then complete the work in each of the sections starting with **Getting Started**.

If using an alternative (proprietary) foundation system, the installation process will change from that described in this manual. Consult the system manufacturer directions for instructions. See page 6 for alternative foundation system criteria.

SINGLE SECTION HOME		MULTI-SECTION HOME	
Pier and Ground Anchor	**Load-Bearing Perimeter Wall**	**Pier and Ground Anchor**	**Load-Bearing Perimeter Wall**
Getting Started (p. 9) ▼ Prepare the Site (p. 14) ▼ Install Footings (p. 19) ▼ Set the Home (p. 34) ▼ Install Stabilizing System (p. 67) ▼ Connect Utilities (p. 79) ▼ Prepare Appliances and Equipment (p. 88) ▼ Complete Under the Home and Site Built Structures (p. 97) ▼ Prepare Home for Occupancy (p. 101) ▼ Complete Installation Checklist (p. 102)	Getting Started (p. 9) ▼ Prepare the Site (p. 14) ▼ Construct Foundation (p. 32) ▼ Connect Utilities (p. 79) ▼ Prepare Appliances and Equipment (p. 88) ▼ Complete Under the Home and Site Built Structures (p. 97) ▼ Prepare Home for Occupancy (p. 101) ▼ Complete Installation Checklist (p. 102)	Getting Started (p. 9) ▼ Prepare the Site (p. 14) ▼ Install Footings (p. 19) ▼ Set the Home (p. 34) ▼ Complete Multi-Section Set (p. 40) ▼ Complete Roof and Exterior Walls (p. 53) ▼ Connect Crossovers (p. 58) ▼ Complete Interior (p. 65) ▼ Install Stabilizing System (p. 67) ▼ Connect Utilities (p. 79) ▼ Prepare Appliances and Equipment (p. 88) ▼ Complete Under the Home and Site Built Structures (p. 97) ▼ Prepare Home for Occupancy (p. 101) ▼ Complete Installation Checklist (p. 102)	Getting Started (p. 9) ▼ Prepare the Site (p. 14) ▼ Construct Foundation (p. 32) ▼ Complete Roof and Exterior Walls (p. 53) ▼ Connect Crossovers (p. 58) ▼ Complete Interior (p. 65) ▼ Connect Utilities (p. 79) ▼ Prepare Appliances and Equipment (p. 88) ▼ Complete Under the Home and Site Built Structures (p. 97) ▼ Prepare Home for Occupancy (p. 101) ▼ Complete Installation Checklist (p. 102)

Disclaimer
The Manufactured Housing Research Alliance, its members, consultants, contractors and representatives make no representations, warranty or guarantee, express or implied, as to the accuracy or appropriateness of any materials or information in this manual for use in a specific home, nor assume any liability for the use of the information, methods, or materials contained herein, or for damages arising from any such use.

Copyright © 2008 Manufactured Housing Research Alliance

ISSN 1529-3424

Introduction

This installation manual contains instructions that must be followed for the proper installation of the home. It complies with the HUD Model Manufactured Home Installation Standards. Please read all instructions and any other documents (including addendum pages and supplements) that may apply to the specific home prior to commencing site work or installation.

This installation manual covers permits and site work through final inspection of the installation. It covers both single and multi-section homes installed over pier and anchor, load bearing crawl space walls and basement foundations. It contains instructions, including specifications and procedures, for the set and hookup of manufactured homes to be used as single-family dwellings.

The importance of correct installation cannot be over-emphasized. Correct installation is absolutely essential to home-owner satisfaction and the structural integrity of the home. All instructions must be followed to provide the customer with a safe, quality home.

No manual can cover all circumstances that may exist for certain home designs or building sites. For questions, further clarification, or if you encounter conditions at the site or in the design of the home or its foundation not covered by this manual, please contact the manufacturer (see **Resources**, p. 3), a registered engineer, or registered architect.

Supplemental addendum pages may be included with this manual. Supplements include requirements not covered in this manual or that supersede the manual instructions.

Once the home installation is complete, leave this manual with the home.

IMPORTANT NOTICES

- The home manufacturer is not responsible for installation or for the materials supplied by the set-up crew at the time of installation. The installer may be responsible for any deviations from the installation instructions of this manual.
- To keep the home in compliance with its warranty, the home installation must follow the procedures described in this manual or other procedures approved by the manufacturer. Deviation from the instructions in this manual may void the home's warranty. Any alterations or changes to the home shall be approved by a registered engineer or registered architect and may still be subject to warranty violations.
- When an installer does not provide support and anchorage in accordance with the approved manufacturer's installation instructions, or encounters site conditions (such as areas that are subject to flood damage or high seismic risk) or other conditions that prevent the use of the instructions provided in this manual, the installer must obtain special site-specific instructions from the manufacturer or use a design approved by a registered engineer or registered architect.
- The installer must possess a valid installation license as a manufactured home installer.
- If the installer identifies failures of the home to comply with the Federal Manufactured Home Construction and Safety Standards (the HUD Code), the installer must notify the manufacturer and retailer.

SAFETY

There are potential hazards associated with the installation of a manufactured home. Home installers are licensed, and as experienced professionals, should recognize these hazards, be qualified to work with them, and be capable of providing safe work practices and equipment that minimize the risks of injury.

Only qualified persons should install a manufactured home. As qualified professionals in the field of manufactured home installation, installers are the experts and must be aware of the hazards and conditions faced. Warnings are published throughout this manual as reminders. These reminders may not cover all hazards, all potential hazards, or all possible consequences of improper or unsafe installation practices.

Construction crews should be trained in the skills required and be supervised by experienced personnel. Installers should regularly inspect work performed by crews and subcontractors.

Obey OSHA regulations, particularly those related to home construction, such as Title 29 Code of Regulations Part 1926. For copies of OSHA regulations, call (202) 512-1800 or visit www.osha.gov on the web.

RESOURCES

Manufacturer contact information:

ADVENTURE HOMES of Garrett, IN. LLC
1119 Fuller Dr.
Garrett, IN. 46738
Telephone: (260) 357-1963

FAX: (260) 357-1969
E-mail:
Website:

Office of Regulatory Affairs and Manufactured Housing
US Department of Housing and Urban Development
451 Seventh Street, SW, Room 9164
Washington, DC 20410-8000
Telephone: (202) 708-6423 or (800) 927-2891
FAX: (202) 708-4213

State Administrative Agencies

A list of SAAs may be found on the web at www.hud.gov or by contacting the Office of Regulatory Affairs and Manufactured Housing.

FEDERAL PREEMPTION

This home was engineered, constructed, and inspected in conformance with the Federal Manufactured Home Construction and Safety Standards of the US Department of Housing and Urban Development (24 CFR Part 3280, commonly referred to as the "HUD Code") in effect on the date of manufacture. These Standards set forth minimum requirements for the design and construction of manufactured homes designed to be used as dwellings.

Individual states, counties and cities shall have no authority to establish standards regarding the construction or safety of a manufactured home. A metal certification label is affixed to each section of the home to certify that it has been constructed and inspected to comply with these Standards. The design plans and in-plant construction of all homes are inspected by independent third party agencies to assure compliance with the Standards.

The installation of the home and any alterations made to the home shall conform to the requirements of the Federal Manufactured Home Construction and Safety Standards and the HUD Model Manufactured Home Installation Standards. These installation instructions are minimum requirements. Applicable local or state laws may have more stringent installation requirements than outlined in this manual and must be followed. Consult with the local authority having jurisdiction (LAHJ) for regulations that may require licenses and/or permits or which may affect procedures described in this manual.

DEFINITIONS

ANCHOR ASSEMBLY. Any device or other means designed to transfer loads to the ground.

ANCHORING EQUIPMENT. Ties, straps, cables, turnbuckles, chains, and other approved components, including tensioning devices that are used to secure a manufactured home to anchor assemblies.

ANCHORING SYSTEM. A combination of anchoring equipment and anchor assemblies that will, when properly designed and installed, resist the uplift, overturning, and lateral forces on the manufactured home.

BASEMENT. A load-bearing perimeter wall foundation that includes habitable space (finished or unfinished, heated or unheated) partly or completely below grade.

CRAWLSPACE. The space underneath the home's floor system, enclosed with either load- or non-load bearing perimeter walls. The ground may be covered with a concrete slab or by a plastic ground cover. Crawlspace walls must be vented.

CROSSOVERS. Utility interconnections between sections of multi-section homes, including heating and cooling ducts, electrical circuits, and water pipes, drain plumbing, and gas lines.

DATA PLATE. An information sheet located at the main electrical panel, in the utility room, in a bedroom closet, or in a cabinet in the kitchen. It contains a unique identification number and identifies the wind zone, roof load zone, and climatic zone for which the home was constructed.

DIAGONAL TIE. A tie intended to resist horizontal or shear forces, but which may resist vertical, uplift, and overturning forces.

FOOTING. That portion of the support system that transmits loads directly to the soil.

GROUND ANCHOR. A specific anchoring assembly device designed to transfer home loads to the ground.

H-BEAM. Steel H-beams are often used to support a home over a basement or crawlspace. They span across the foundation from sidewall to sidewall, typically with an intermediate support pier and footing (typically in the center point resulting in a line of piers under the centerline of a double section home).

INFORMATION PACKET. A set of important documents provided with the home including warranties, information on high wind coverage, and other features of the specific home.

INSTALLATION LICENSE. The proof that an installer meets the requirements for installing manufactured homes under the HUD-administered installation program.

LABELED. Equipment or materials to which has been attached a label, symbol, or other identifying mark of a certified testing laboratory, inspection agency, or other an organization concerned with product evaluation. The label indicates compliance with nationally recognized standards or tests to determine suitable usage in a specified manner.

LISTED OR CERTIFIED. Included in a list published by a nationally recognized testing laboratory, inspection agency, or other organization concerned with product evaluation that maintains periodic inspection of production of listed equipment or materials, and whose listing states either that the equipment or material meets nationally recognized standards or has been tested and found suitable for use in a specified manner.

LOAD-BEARING PERIMETER WALL FOUNDATION. A support system for the home whereby the home is mechanically fastened to a structural wall(s) that transfers gravity, lateral, and uplift loads to the ground.

LOCAL AUTHORITY HAVING JURISDICTION (LAHJ). The state, city, county, municipality, utility, or organization that has local responsibilities that must be complied with during the installation of a manufactured home.

MUST. Indicates a mandatory requirement.

N/A. Indicates not applicable.

PIER. That portion of the support system between the footing and the manufactured home, exclusive of shims. Types of piers include, but are not limited to: (1) manufactured steel stands; (2) pressure-treated wood; (3) manufactured concrete stands; (4) concrete blocks; and (5) portions of foundation walls.

PIER AND GROUND ANCHOR FOUNDATION. A support system for the home that employs piers under the chassis and other locations to support gravity loads and employs ground anchors and tie downs (the stabilizing system) to resist lateral and uplift loads.

PERIMETER BLOCKING. Regularly spaced piers supporting the sidewalls and marriage line of the home. Some homes require perimeter blocking in addition to supports under the home's frame.

QUALIFIED. Has the necessary knowledge and skills gained from experience and training that will allow performance of the job safely, competently, and in accordance with all applicable codes, standards, rules, and regulations. Meets all necessary qualification tests including any license and certification requirements that may be in effect in the area where the home will be installed.

RAMADA. Any freestanding roof or shade structure, installed or erected over a manufactured home or any portion thereof.

SHOULD. Indicates a recommendation that is strongly advised but not mandatory.

SHALL. Indicates a mandatory requirement.

SITE FOR A MANUFACTURED HOME. A designated parcel of land designed for the accommodation of one manufactured home, its accessory buildings or structures, and accessory equipment, for the exclusive use of the occupants of the home.

SKIRTING. A weather-resistant material used to enclose the perimeter, under the living area of the home, from the bottom of the manufactured home to grade.

STABILIZING SYSTEM. All components of the anchoring and support systems, such as piers, footings, ties, anchoring equipment, anchoring assemblies, or any other equipment, materials and methods of construction, that support and secure the manufactured home to the ground.

SUPPORT SYSTEM. Pilings, columns, a combination of footings, piers, foundation walls, caps, and shims and any combination thereof that will, when properly installed, support and secure the manufactured home to the ground.

TIE. Straps, cable, or securing devices used to connect the manufactured home to anchoring assemblies.

UTILITY CONNECTION. The connection of the manufactured home to utilities that include, but are not limited to, electricity, water, sewer, gas, or fuel oil.

VERTICAL TIE. A tie intended to resist uplifting and overturning forces.

WIND ZONE. The areas designated on the Basic Wind Zone Map, as further defined by the Manufactured Home Construction and Safety Standards.

ENGINEER'S STAMP

Certain pages of this manual display the seal of a registered engineer. Federal guidelines only require the seal from one state to be displayed, but the details herein apply to all states.

SYMBOLS USED IN THE MANUAL

This icon indicates an important warning. It is critical to heed these warnings.

This icon indicates a recommended best practice. While not required, following these practices will result in a superior installation, reducing the chance that cosmetic or durability related complaints might arise.

ABBREVIATIONS

ABS	Acrylonitrile Butadiene Styrene	**max.**	Maximum
ANSI	American National Standards Institute	**MHCSS**	Manufactured Home Construction and Safety Standards
APA	American Plywood Association	**min.**	Minimum
ASTM	American Society for Testing and Materials	**mph**	Mile(s) per hour
AWPA	American Wood Preservers Association	**NEC**	National Electric Code
CFM	Cubic feet per minute	**NFIP**	National Flood Insurance Program
CFR	Code of Federal Regulations	**NFPA**	National Fire Protection Association
DWV	Drain, Waste, Vent	**o.c.**	On center
EMT	Electrical metallic tubing	**OSHA**	Occupational Safety and Health Administration
FEMA	Federal Emergency Management Agency	**oz**	Ounce(s)
ft	Foot/feet	**p.**	Page
ga	Gauge	**psf**	Pounds per square foot
HUD	US Department of Housing and Urban Development	**psi**	Pounds per square inch
in	Inch(es)	**SAA**	State Administrative Agency
LAHJ	Local Authority Having Jurisdiction	**sq ft**	Square foot/feet
lb(s)	Pound(s)		

ALTERNATIVE FOUNDATION SYSTEMS

Alternative foundation systems or designs are permitted if they are approved by the home manufacturer and the manufacturer's DAPIA, and are in accordance with either of the following:

- Systems or designs are manufactured and installed in accordance with their listings by a nationally recognized testing agency based on a nationally recognized testing protocol; or
- System designs are prepared by a registered engineer or a registered architect or tested and certified by a registered engineer or registered architect in accordance with acceptable engineering practice and are manufactured and installed so as not to take the home out of compliance with the Manufactured Home Construction and Safety Standards.

DISPLAY AND STORAGE OF THE HOME

WEATHER PROTECTION

If the installation is not started immediately upon delivery of the home, the retailer and/or installer has the responsibility to ensure the exterior weather protection covering of marriage walls and the roof of homes with hinged roofs has not been damaged during shipment. Inspect the home immediately upon the delivery and frequently during storage. Promptly repair tears in the home closure materials to prevent damage from the elements. Inspect and repair roof shingles and siding as needed.

SUPPORTING A HOME FOR DISPLAY

When a new or used manufactured home is to be displayed at a retail location, temporarily block and support the home. Set up single-section homes with single block piers spaced no further apart than 12 feet o.c. beneath each I-beam. The tire and axle system may be used as one of these required supports, and the hitch jack may be used as another. Locate the first pier no further than two feet from the rear end of the home (**Figure 1**). Place additional piers along the perimeter on either side of openings greater than four feet (i.e. sliding glass doors, bay windows, etc.).

For multi-section homes, locate additional piers along the marriage line under support columns. These locations will be marked by the manufacturer.

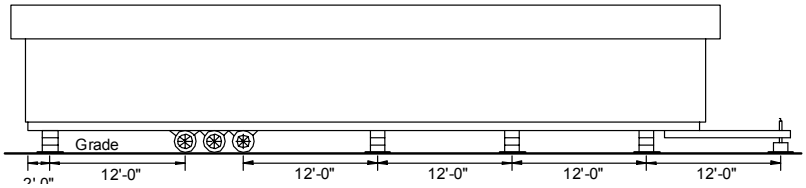

Figure 1. *Supporting a home for display*

For all homes, place footings below each pier. Footings may be placed directly on the surface grade without excavation and may be ABS pads, 2 x 10 by 16 inch long pressure treated lumber or 16” x 16” by 4 inch thick concrete pads.

SUPPORTING A HOME FOR STORAGE

To prevent damage to homes being stored but not on display (i.e. people shall not be permitted inside the home) for a period exceeding 30 days, locate piers below each I-beam no further than two feet from each end of the home and at the approximate center of the home length.

CUSTOMIZATION OF THE MODEL MANUAL

This manual is based on a model manufacturer’s installation manual used by many different companies. It may have been customized from the model by the manufacturer. The table below lists the locations where this manual differs from the model manual.

Section	Step	Summary of the change
Getting Started	2 - Confirm Wind Zone	Added information for a WZII or III home in WZI area.
Getting Started	3 - Confirm Thermal Zone	Added clarification that homes not be designated for the Humid & Fringe zone may still be located in that zone.
Getting Started	4 - Confirm the Roof Load Zone	Added note that 30 psf or higher roof load home in 20 psf zone may omit perimeter piering (except at doors).
Prepare the Site	3 - Clear & Grade the Site	Added clarification that home is suitable for gutters.
Install Footings	1 - Design Point Loads Supports	Deleted warning for 40 psf and higher roof loads. (Plans for home will include the loads for such installations)
Install Footings	1 - Design Point Loads Supports	Deleted Table for Point-Load Footings; Deleted Figure for Typical Point Load Supports; Revised Calculate Loads section. (Reason - Mating line loads are indicated on floor plans)
Install Footings	2 - Design Frame Supports	Added exception to the warning concerning having a support no more than 12" from end of beam for 10 & 12 wides.
Install Footings	3 - Design Frame & Perim. Supp.	Added exception to the warning concerning having a support no more than 12" from end of beam for 10 & 12 wides.
Install Footings	3 - Design Frame & Perim. Supp.	Deleted Figure for Typical Marriage Line Support Locations; deleted text for mating line bearing walls. (Reason - Mating line loads are indicated on floor plans)
Install Footings	4 - Select Footing Material	Added wood footing material to Table for Footing Materials.
Install Footings	5 - Size Footings	Added note concerning conc. runners as alternate to footings
Install Footings	5 - Size Footings	Added Table for Footing Equivalents added showing equivalents for precast concrete, round concrete, and lumber.
Install Footings	6 - Install Footings	Added Figures for Multiple Piers at Support Post, with or without G-straps.
Construct Foundation	4 - Construct Perim. Wall	Added warning about foundation dimensions when 2x6 exterior wall option is ordered. Also clarified when special foundation plans are required.
Set the Home	1 - Prepare for Set	Revised level tolerance; eliminated 1/4" overall tolerance.
Set the Home	4 - Construct the Piers	Deleted pressure treated wood from Table for Pier Materials
Complete Multi-Section Set	3 - Complete Hinged Roof	Replaced all hinged truss details with new ones, including details for ridge filler option
Complete Multi-Section Set	4 - Mating Line Gasket	Deleted figure for in-floor cross-over duct; added figure for mating line gasket installation
Complete Multi-Section Set	4 - Mating Line Gasket	Added warning about mating line gasket
Complete Multi-Section Set	5 - Position Additional Home Sections	Added tolerance of 1-1/2" at roof peak and added plywood as shim materials
Complete Multi-Section Set	6 - Connect Floors	Increased lag bolt size and eliminated wood screws from Table for Floor Connection.

Section	Step	Summary of the change
Complete Multi-Section Set	7 - Connect Roof	Increased lag bolt size and eliminated wood screws from Table for Roof Connection
Complete Multi-Section Set	7 - Connect Roof	Added roof cap fastening to Table for Roof Connections
Complete Multi-Section Set	7 - Connect Roof	Deleted roof straps and fastening (bolting) through ridgebeam
Complete Multi-Section Set	7 - Connect Roof	Added roof strap over sheathing fastening method
Complete Multi-Section Set	7 - Connect Roof	Similar changes for triple-section as shown earlier for double-section (i.e. lag bolts increased and roof straps added)
Complete Multi-Section Set	8 - Connect Walls	Deleted fastening through endwall studs
Complete Multi-Section Set	9 - Attach Tag Units	Revised level tolerance; added shimming step, Deleted Figures for tag unit offset conditions; added figure for tag roof to main unit connection
Complete Roof & Ext. Walls	1 - Complete the Roof	Added gap filling method for triple-section roofs
Complete Roof & Ext. Walls	2 - Complete Tag Unit Roof	Deleted text & figure for tag unit with offset roof
Connect Cross-overs	1 - Connect the Ducts	Deleted text & figures for roof cavity crossover and in the floor crossover
Connect Cross-overs	2 - Connect Electrical Cross-overs	Deleted text & figure for method 2: junction box with conduit
Connect Cross-overs	2 - Connect Electrical Cross-overs	Deleted text & figure for wall crossovers
Connect Cross-overs	3 - Install Electrical Bonding	Deleted text for strap method of bonding
Connect Cross-overs	4 - Connect Water Lines	Deleted text & figure for water lines dropped below bottom board
Installing Stabiliz-ing Sys.	1 - Determine Anchor Loca-tions	Added warning about underground utilities
Installing Stabiliz-ing Sys.	1 - Determine Anchor Loca-tions	Eliminated WZ1 from table for End Wall Frame Anchors
Installing Stabiliz-ing Sys.	1 - Determine Anchor Loca-tions	Deleted endwall frame anchors
Installing Stabiliz-ing Sys.	1 - Determine Anchor Loca-tions	Removed WZ2 & 3 limits on shearwall anchors and marriage line vertical an-chors
Installing Stabiliz-ing Sys.	1 - Determine Anchor Loca-tions	Added figure for G-straps at mating line
Installing Stabiliz-ing Sys.	5 - Install Straps	Added figure for attaching vertical strap to floor bracket
Installing Stabiliz-ing Sys.	5 - Install Straps	Deleted Vertical Anchors text and figure
Installing Stabiliz-ing Sys.	5 - Install Straps	Added Figure for G-strap Anchoring at Support Posts; Deleted Figure for Mat-ing Line Tie-down Brackets.
Connect Utilities	1 - Connect Electrical Service	Revised table for Electrical Feeder Wires by adding 150 amp and renaming Bare Ground
Connect Utilities	2 - Connect Water Service	Deleted fill water heater step from hydrostatic method
Connect Utilities	3 - Connect Gas Service	Revised orifice warning from 3000 to 2000 feet; added warning about derated fuels
Prepare Appliances & Equip.	Install Air Conditioner or Heat Pump	Deleted text & figure for whole house ventilation flex duct with A-coil
Prepare Appliances & Equip.	Prepare Smoke Alarms	Revised test method for smoke alarms; deleted steps for removing batteries
Prepare Appliances & Equip.	Install Ceiling Fans/Lights	Revised distance to smoke alarm to fan tip measurement
Prepare Appliances & Equip.	Install Ceiling Fans/Lights	Deleted text & figure for mounting on site-installed beam
Prepare Appliances & Equip.	Test Electrical System	Added exception for plastic pipes; added detail to continuity test; added bulb installation to operational test
Complete Exterior Work	3 - Install Skirting	Prohibited the use of operable foundation vents
Complete Exterior Work	4 - Opt Wind Protection Shut-ters	Complete rewrite of the shutter text, table & figures; added warning about the use of shutters
Complete Exterior Work	5 - Site-Built Structures	Clarified connections to the home; added caution on heating, light/vent & egress for site-built structure

Getting Started

This chapter covers a few steps that, taken now, will avoid problems later in the installation process.

Follow the Steps below:

- **STEP 1. LOCATE THE DATA PLATE** (p. 9)
- **STEP 2. CONFIRM WIND ZONE** (p. 9)
- **STEP 3. CONFIRM THERMAL ZONE** (p. 10)
- **STEP 4. CONFIRM ROOF-LOAD ZONE** (p. 11)
- **STEP 5. CHECK LOCAL CODES AND SECURE PERMITS** (p. 13)

STEP 1. LOCATE THE DATA PLATE

Locate the data plate inside the home (**Figure 2**), typically inside a kitchen cabinet door or on a wall panel or door face near the electrical panel, utility room, or bedroom closet.

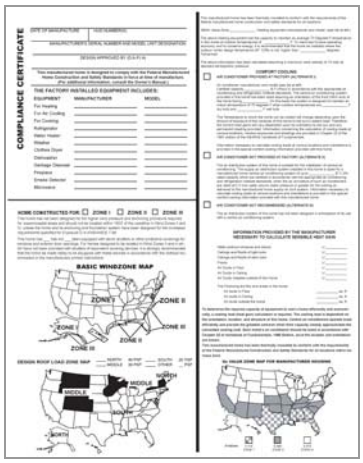

Figure 2. *Sample data plate*

The information on the data plate will be used to verify that the home was designed for the proper location.

STEP 2. CONFIRM WIND ZONE

From **Table 1**, identify the wind zone for the home. Verify that the home conforms to the following rules and any special requirements determined by the LAHJ.

- No home may be located in a higher wind zone than that indicated on the data plate. (Example: a home designed for Wind Zone II cannot be placed in Wind Zone III.)
- A home may be located in a lower wind zone than that indicated on the data plate. (Example: a home designed for Wind Zone II can be placed in either Wind Zone II or I.) When a Wind Zone II or III home is placed in Wind Zone I, the home may be installed either per the requirements of the higher wind zone for which the home was manufactured, or it may be installed per the requirements of Wind Zone I, with the following additional instructions:
    - Mating line G-straps must be installed per the higher wind zone.
    - Shearwall G-straps must be installed per the higher wind zone.
    - Longitudinal tie-downs strapping may be per Wind Zone I.

Site appropriateness. If the site is not accessible, not appropriate for the planned support system or cannot be properly graded, notify the purchaser, the retailer and HUD, with the reasons why the site is unsuitable. Do not install the home until all issues are remedied.

- Vertical anchoring may be ignored, however the brackets along the sidewall should remain in place.
- Floor and roof connections may be per Wind Zone I

- When a Wind Zone III home is placed in Wind Zone II, all requirements of Wind Zone III should be followed.
- Homes located within 1,500 feet of the coastline in Wind Zones II and III must be designed to withstand exposure 'D' conditions. This will be indicated on the data plate.

If the home does not conform to these rules, contact the manufacturer immediately.

TABLE 1. WIND ZONE BY LOCALITY

Wind Zone I	
All areas except those areas listed below as being within Wind Zone II or III	
Wind Zone II	
Alabama	Counties of Baldwin and Mobile
Florida	All counties except those listed below as within Wind Zone III
Georgia	Counties of Bryan, Camden, Chatham, Glynn, Liberty, McIntosh
Louisiana	Parishes of Acadia, Allen, Ascension, Assumption, Calcasieu, Cameron, East Baton Rouge, East Feliciana, Evangeline, Iberia, Iberville, Jefferson Davis, Lafayette, Livingston, Pointe Coupee, St. Helena, St. James, St. John the Baptist, St. Landry, St. Martin, St. Tammany, Tangipahoa, Vermillion, Washington, West Baton Rouge, and West Feliciana
Maine	Counties of Hancock and Washington
Massachusetts	Counties of Barnstable, Bristol, Dukes, Nantucket, and Plymouth
Mississippi	Counties of George, Hancock, Harrison, Jackson, Pearl River, and Stone
North Carolina	Counties of Beaufort, Brunswick, Camden, Chowan, Columbus, Craven, Currituck, Jones, New Hanover, Onslow, Pamlico, Pasquotank, Pender, Perquimans, Tyrrell, and Washington
South Carolina	Counties of Beaufort, Berkeley, Charleston, Colleton, Dorchester, Georgetown, Horry, Jasper, and Williamsburg
Texas	Counties of Aransas, Brazoria, Calhoun, Cameron, Chambers, Galveston, Jefferson, Kennedy, Kleberg, Matagorda, Nueces, Orange, Refugio, San Patricio, and Willacy
Virginia	Cities of Chesapeake, Norfolk, Portsmouth, Princess Anne, and Virginia Beach
Wind Zone III	
Hawaii	Entire state
Alaska	Coastal regions (as determined by the 90 mph isotach on the ANSI/ASCE 7-88 map)
Florida	Counties of Broward, Charlotte, Collier, Dade, Franklin, Gulf, Hendry, Lee, Martin, Manatee, Monroe, Palm Beach, Pinellas, and Sarasota
Louisiana	Parishes of Jefferson, La Fourche, Orleans, Plaquemines, St. Bernard, St. Charles, St. Mary, and Terrebonne
North Carolina	Counties of Carteret, Dare, and Hyde
Other	All regions of the U.S. Territories of American Samoa, Guam, Northern Mariana Islands, Puerto Rico, Trust Territory of the Pacific Islands, and the United States Virgin Islands

STEP 3. CONFIRM THERMAL ZONE

From **Figure 3**, identify the thermal (UO) zone for the home. Verify that the home conforms to the following rules.

- No home may be located in an area with a higher thermal zone number than that indicated on the data plate. (Example: a home designed for Thermal Zone 2 cannot be placed in Thermal Zone 3.)
- A home may be located in a lower thermal zone than that indicated on the data plate. (Example: a home designed for Thermal Zone 2 may be placed in either Thermal Zone 2 or 1.).
- In no case may a home designated for installation in the "Humid & Fringe Climate," as identified on the data plate, be located outside of this region (**Table 2**). A home that is not specifically designated for installation in the

"Humid and Fringe Climate" (that is, has no such designation at all on the data plate) may still be located in this region (**Table 2**).

If the home does not conform to these rules, contact the manufacturer immediately.

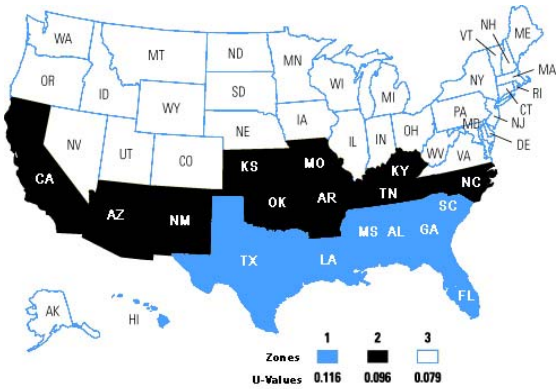

Figure 3. *Thermal (UO) zone map*

TABLE 2. HUMID AND FRINGE CLIMATE ZONES

Humid and Fringe Climate Zone	
Alabama	Counties of Baldwin, Barbour, Bullock, Butler, Choctaw, Clarke, Coffee, Conecuh, Covington, Crenshaw, Dale, Escambia, Geneva, Henry, Houston, Lowndes, Marengo, Mobile, Monroe, Montgomery, Pike, Washington, and Wilcox
Florida	All counties and locations
Georgia	Counties of Appling, Atkinson, Bacon, Baker, Ben Hill, Berrien, Brantley, Brooks, Bryan, Calhoun, Camden, Charleton, Chatham, Clay, Clinch, Coffee, Colquitt, Cook, Crisp, Decatur, Dougherty, Early, Echols, Effingham, Evans, Glynn, Grady, Irwin, Jeff Davis, Lanier, Lee, Liberty, Long, Lowndes, McIntosh, Miller, Mitchell, Pierce, Quitman, Randolph, Seminole, Tattnall, Terrell, Thomas, Tift, Turner, Ware, Wayne, and Worth
Hawaii	All counties and locations
Louisiana	All counties and locations
Mississippi	Counties of Adams, Amite, Claiborne, Clarke, Copiah, Covington, Forrest, Franklin, George, Greene, Hancock, Harrison, Hinds, Issaquena, Jackson, Jasper, Jefferson, Jefferson Davis, Jones, Lamar, Lawrence, Lincoln, Marion, Pearl River, Perry, Pike, Rankin, Simpson, Smith, Stone, Walthall, Warren, Wayne, and Wilkinson
North Carolina	Counties of Brunswick, Carteret, Columbus, New Hanover, Onslow, and Pender
South Carolina	Counties of Beaufort, Berkeley, Charleston, Colleton, Dorchester, Georgetown, Horry and Jasper
Texas	Counties of Anderson, Angelina, Aransas, Atascosa, Austin, Bastrop, Bee, Bexar, Brazoria, Brazos, Brooks, Burleson, Caldwell, Calhoun, Cameron, Camp, Cass, Chambers, Cherokee, Colorado, Comal, De Witt, Dimmit, Duval, Falls, Fayette, Fort Bend, Franklin, Freestone, Frio, Galveston, Goliad, Gonzales, Gregg, Grimes, Guadalupe, Hardin, Harris, Harrison, Hays, Henderson, Hidalgo, Hopkins, Houston, Jackson, Jasper, Jefferson, Jim Hogg, Jim Wells, Karnes, Kaufman, Kennedy, Kinney, Kleberg, La Salle, Lavaca, Lee, Leon, Liberty, Limestone, Live Oak, Madison, Marion, Matagorda, Maverick, McMullen, Medina, Milam, Montgomery, Morris, Nacogdoches, Navarro, Newton, Nueces, Orange, Panola, Polk, Rains, Refugio, Robertson, Rusk, Sabine, San Augustine, San Jacinto, San Patricio, Shelby, Smith, Starr, Titus, Travis, Trinity, Tyler, Upshur, Uvalde, Val Verde, Van Zandt, Victoria, Walker, Waller, Washington, Webb, Wharton, Willacy, Williamson, Wilson, Wood, Zapata, and Zavala

STEP 4. CONFIRM ROOF LOAD ZONE

From **Table 3**, identify the Roof Load Zone for the home. Verify that the home conforms to the following rules.

- No home may be placed in an area with a higher roof load than that indicated on the data plate. (Example: a home designed for the South (20 psf) Roof Load Zone cannot be placed in the Middle (30 psf) Roof Load Zone).
- A home may be located in an area with a lower roof load than that indicated on the data plate. (Example: a home designed for the Middle (30 psf) Roof Load Zone may be placed in the South (20 psf) Roof Load Zone).
- Note –When a home designed for a higher roof load zone is placed in the 20 psf Roof Load Zone, the perimeter piering may be omitted with the exception of the point-load support locations (doors, openings 4 feet or greater in width, etc.) which are still required.

- There are special high roof load areas (primarily in mountains) not shown on the map. Contact the LAHJ or SAA for information about these areas. The home's data plate will indicate if the home has been designed for one of these high roof load areas.
- Ramadas may be used in areas with roof live loads greater than 40 psf. Ramadas are to be self-supporting, except that any connection to the home must be for weatherproofing only.

TABLE 3. ROOF LOADS BY LOCALITY

North (40 psf roof load)	
Alaska	All counties
Maine	Counties of Aroostook, Piscataquis, Somerset, Penobscot, Waldo, Knox, Hancock, Washington
Middle (30 psf roof load)	
Colorado	All counties
Idaho	All counties
Iowa	Counties of: Buena Vista, Butler, Calhoun, Cerro Gordo, Cherokee, Chickasaw, Clay, Dickinson, Emmet, Floyd, Franklin, Hamilton, Hancock, Hardin, Howard, Humboldt, Ida, Kossuth, Lyon, Mitchell, O'Brien, Osceola, Palo Alto, Plymouth, Pocahontas, Sac, Sioux, Webster, Winnebago, Worth, Wright
Maine	Counties of Androscoggin, Cumberland, Franklin, Kanabec, Lincoln, Oxford, Sagadahoc, York
Massachusetts	County of Essex
Michigan	Counties of Alger, Alcona, Alpena, Antrim, Baraga, Benzie, Charlevoix, Cheboygan, Chippewa, Crawford, Delta, Dickson, Emmet, Gogebic, Grand Traverse, Houghton, Iron, Kalkaska, Keweenaw, Leelanau, Luce, Mackinac, Marquette, Menominee, Missaukee, Montmorency, Ogemaw, Ontonagon, Oscoda, Otsego, Presque Isle, Roscommon, Schoolcraft, Wexford
Minnesota	Counties of Aitkin, Anoka, Benton, Blue Earth, Brown, Cass, Carlton, Carver, Chippewa, Chisago, Cook, Cottonwood, Crow Wing, Dakota, Dodge, Douglas, Faribault, Fillmore, Freeborn, Goodhue, Grant, Hennepin, Hubbard, Itasca, Isanti, Jackson, Kandiyohi, Kanabec, Koochiching, Lac qui Parle, Lake, Le Sueur, Lincoln, Lyon, McLeod, Meeker, Morrison, Millie Lacs, Mower, Martin, Murray, Nicollet, Nobles, Olmsted, Pipestone, Pine, Pope, Ramsey, Redwood, Renville, Rice, Rock, St. Louis, Sibley, Scott, Steele, Sherburne, Swift, Stearns, Stevens, Todd, Wadena, Wright, Washington, Wabasha, Winona, Waseca, Watonwan, Yellow Medicine
Montana	All Counties
New Hampshire	All Counties
New York	Counties of Cayuga, Clinton, Essex, Erie, Franklin, Fulton, Genesee, Hamilton, Herkimer, Jefferson, Lewis, Livingston, Madison, Monroe, Montgomery, Niagara, Oneida, Onondaga, Ontario, Orleans, Oswego, St. Lawrence, Saratoga, Schenectady, Seneca, Warren, Washington, Wayne, Wyoming, Yates
South Dakota	Counties of Brookings, Clay, Codington, Deuel, Grant, Hamlin, Hanson, Hutchinson, Kingsbury, Lake, Lincoln, McCook, Miner, Minnehaha, Moody, Turner, Union, Yankee
Utah	All Counties
Vermont	Counties of Addison, Caledonia, Chittenden, Essex, Franklin, Grand Isle, Lamoille, Orange, Orleans, Rutland, Washington, Windsor
Wisconsin	Counties of Ashland, Bayfield, Barron, Buffalo, Burnett, Clark, Chippewa, Door, Douglas, Dunn, Eau Claire, Florence, Forest, Iron, Jackson, Langlade, Lincoln, Marathon, Marinette, Menominee, Oconto, Oneida, Pepin, Pierce, Polk, Price, Rusk, St. Croix, Sawyer, Taylor, Trempealeau, Vilas, Washburn
Wyoming	All Counties
South (20 psf roof load)	
Other	The states and counties not listed for the Middle or North roof load zone above are deemed to be within the South roof load zone.

Is the data plate present and the home placed in the appropriate wind, thermal, and roof load zones?

► **YES**, go to **STEP 5, CHECK LOCAL CODES AND SECURE PERMITS,** (p. 13).

► **NO,** Stop installation activities and notify the home retailer, purchaser and HUD.

STEP 5. CHECK LOCAL CODES AND SECURE PERMITS

Local regulations may set conditions for the setting and installation of a manufactured home. Consult the LAHJ, state manufactured housing association, and the state SAA (See **Resources**, p. 3) for the specific local requirements, including:

- Building codes that may affect the construction of site built structures and infrastructure.
- Local requirements regulating the installation of manufactured homes.
- Setback requirements for property lines, streets, yards, and courts.
- Fire separation distances.
- Development covenants for the specific property.
- The locations of flood hazard areas and any special foundation requirements for homes installed in those areas.
- In some areas, building permits are required to install manufactured homes. Prior to making any alteration to the site and the home, contact the LAHJ to determine if plan approval and permits are required.

Areas subject to flooding. The foundation specifications contained in this manual are NOT intended to address flood loads. If the home is in the flood plain, consult a registered engineer.

► go to **Prepare the Site** (p. 14)

Prepare the Site

A properly prepared site is critical to a good quality installation and the long term structural stability of the home.

This chapter explains the process of planning the site, evaluating the soil, and preparing the site for construction of the home's support system.

Follow the Steps below:

- **STEP 1. PLAN SITE ACCESS** (p. 14)
- **STEP 2. DETERMINE HOME LOCATION AND LAYOUT** (p. 14)
- **STEP 3. CLEAR AND GRADE THE SITE** (p. 15)
- **STEP 4. DETERMINE SOIL CONDITIONS** (p. 15)
- **STEP 5. DETERMINE SOIL BEARING CAPACITY AND FROST LINE** (p. 16)
- **STEP 6. DETERMINE GROUND ANCHOR HOLDING CAPACITY** (p. 17)

STEP 1. PLAN SITE ACCESS

Planning the route to the site is typically the responsibility of the retailer or transportation company. Whoever is responsible must secure state permits from the states through which the home will pass.

In planning the route, avoid obstructions that might interfere with the passage of the home, such as low hanging wires and trees, low overpasses, and bridges not suitable for the load. Contact the utility company if wires need to be moved. Do not allow branches, bushes, or other foliage to scrape against the home as the home is moved to the site. Avoid ditches, berms, steep slopes, and soft ground. Identify and fill any holes and soft spots into which the transporter's wheels may sink. Avoid moving over steep changes in grade (20 degrees or more).

If required, provide for home storage and staging areas on the site. Plan the delivery and staging of home sections and materials so that after all deliveries are complete, home sections and materials can be accessed for use and installed in the appropriate sequence. Orient home sections so they do not have to be rotated or excessively maneuvered during the installation process. Plan for temporary needs, such as dumpsters, portable toilets, crew parking, delivery vehicle drop-offs and concrete mixer deliveries.

Before moving the manufactured home to the site, inform the LAHJ and make sure the site is prepared and utilities are available.

Site Preparation. The home manufacturer has no control over the site planning and installation of the home unless the manufacturer is responsible for the home's installation. Final responsibility for site preparation, including soil stability and frost heave control, lies with the installer. An improperly prepared site may result in the denial of a foundation-related warranty claim.

STEP 2. DETERMINE HOME LOCATION AND LAYOUT

The home location may have already been determined by others. If not, plan the home location and layout in compliance with the regulations researched in **Getting Started**, **STEP 5. CHECK LOCAL CODES AND SECURE PERMITS** (p. 13). Contact utilities for locations of existing infrastructure, such as underground cables, pipes, and electrical lines.

When planning the site improvements, consider the following:

- The home location should be level.
- Avoid contact with large trees, steep slopes, poorly drained areas, and potential flood zones.
- Preserve trees and shrubs for shade, visual screens, and windbreaks.
- Plan the driveway, parking areas, septic, well, other structures, and utility lines.

Fire separation. Comply with any LAHJ fire separation requirements or the requirements NFPA 501A, 2003 edition (Chapter 6).

- Consider future additions, such as screen rooms, porches, and awnings.
- Site the home away from natural water paths.

STEP 3. CLEAR AND GRADE THE SITE

Trim overhanging foliage considering future growth, potential storms, swaying in wind and snow/ice-weighted branches. Remove organic material such as vegetation, wood, roots, twigs, dead branches, grass, and brush from directly under the home. Remove any debris that could become termite infested from the site and surrounding area. Remove all other debris from the home location, including roots from beneath footing locations. Properly dispose of all items.

Crown the site (**Figure 4**) away from the foundation for the first ten feet with a minimum slope of 1/2 inch per foot. Where property lines, walls, slopes, or other physical conditions prohibit this slope, provide the site with drains, swales, or grading to drain water away from the structure. Any fill required to grade the site should be inorganic "controlled fill" applied in a maximum of four inch layers, compacted between each layer to at least 90% of its maximum relative density. Direct runoff away from the site using ditches and berms (**Figure 5**). If the home will have skirting, start grading from two feet in from the edge of the home.

Site drainage. Moisture under the home can result in structural damage to the floor system and other parts of the home. Failure to provide adequate slope/drainage can result in moisture-related problems such as mold, mildew, and erosion.

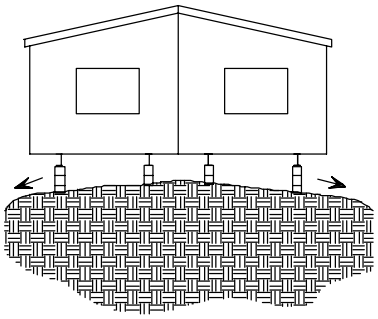

Figure 4. *Crown the soil under the home to prevent water ponding*

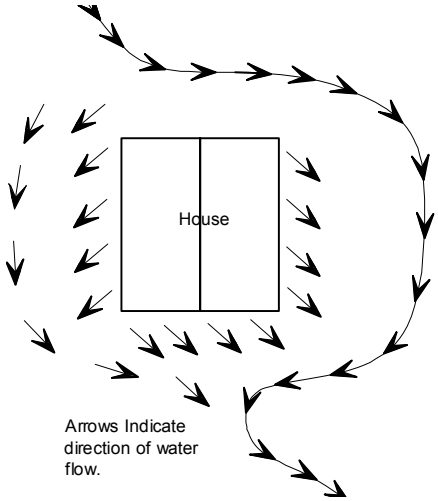

Figure 5. *Direct runoff away from the home*

Grade the ground so that water under porches, decks, and recessed entries flows away from the home. If proper grading is not possible, use other methods such as a drain tile and automatic sump pump system to remove any water that may collect under the home.

The home is suitable for the installation of gutters and downspouts. When gutters and downspouts are installed, direct runoff away from the home.

STEP 4. DETERMINE SOIL CONDITIONS

Examine the soil type under the proposed home location to make sure it is suitable for placement of a home. The design of the home's support system, including footing/pier spacing and size, will in part be determined by the bearing capacity of the soil, and if ground anchors are used, by the soil's withdrawal strength.

The soil under every portion of the support system must meet the following criteria:

- The soil must be firm and undisturbed (not previously excavated) or fill compacted to at least 90% of its maximum relative density. Uncompacted fill will settle over time, causing the home to shift and become unlevel.
- Fill must not contain large debris. This too will settle over time.
- The soil must not be comprised of organic clays or peat. Organic material can decay, causing settlement, and also may harbor pests that can infest the home.

Soil. Inadequate soil bearing capacity or a support system mismatched to the soil characteristics can result in excessive or differential settlement of the home, which can cause the home to go out of level, resulting in jammed doors and windows, cracks in finishes and ruptured plumbing connections.

- The water table must be below the lowest level of the planned support system/foundation. A soil's bearing capacity can be greatly reduced when it is saturated with water. Note that water tables may vary with seasonal or climactic conditions. Consult a geologist or the LAHJ if you are unsure of the water table level.
- The soil must not be a highly expansive type. Expansive soils can expand when they become saturated with water, causing the home to shift and become unlevel. If soils are expansive, contact a registered engineer, or registered architect to assist with the design of the foundation system.

Does the soil meet these criteria?

▶ **YES**, go to **STEP 5, DETERMINE SOIL BEARING CAPACITY AND FROST LINE,** (p. 16).

▶ **NO**, Consult a registered engineer, registered architect, or geologist to determine a suitable soil bearing capacity.

STEP 5. DETERMINE SOIL-BEARING CAPACITY AND FROST LINE

The soil under a home must be capable of withstanding the loads imposed by the weight of the home, its support system and furnishings, as well as any loads imposed by wind, snow, or other climactic conditions.

SOIL-BEARING CAPACITY

Determine the soil-bearing capacity in pounds per square foot (psf) before designing a support system. The higher the capacity (psf), the more weight the soil can hold without unduly compressing. As the soil-bearing capacity increases, footings can be reduced in size or spaced farther apart.

Use one or more of the following methods to determine the site's soil bearing capacity:

- **Test the soil.** Hire a registered geologist, registered engineer, or registered architect to determine the soil classification and maximum allowable soil bearing capacity by testing the soil in accordance with generally accepted engineering practice.
- **Obtain soil records.** The local office of the U.S. Department of Agriculture's Natural Resources Conservation Service (www.soils.usda.gov) and/or the LAHJ may have test results and/or soil analyses on file for the area.
- **Conduct a pocket penetrometer test.** Use a pocket penetrometer to estimate allowable soil-bearing capacity as follows:
  1. Select a location that will be under a footing.
  2. Clear an area of a minimum of one square foot at least four inches deep or to the depth of the bottom of the planned footing.
  3. Using the instructions provided with the pocket penetrometer, take at least five readings.
  4. Discard the high and low readings and average the remaining readings. Round this result down to the nearest soil-bearing value shown in the right column of **Table 4**.
  5. Confirm that the rounded result matches the soil description on **Table 4.**
- **Determine soil-bearing value by visual examination.** If one of the options above is not available, the values on **Table 4** can be used to establish soil-bearing capacity by visual examination. This method provides lower capacity values than the options above. Accurate soil identification typically requires special training or expertise. An engineer or building code official may be able to assist in classifying the soil found on the site.

Soil bearing capacity. Support systems on soils with bearing capacities less than 1,000 psf must be designed by a registered engineer or registered architect and approved by the LAHJ.

Limitations of pocket penetrometers. Pocket penetrometers do not work on sand or gravel. Use **Table 4** to determine allowable pressure for these types of soils. If you encounter a layer of gravel, test the soil under the gravel. Do not put the penetrometer on stones larger than its tip as this will provide an inaccurate reading.

TABLE 4. SOIL-BEARING CAPACITY BY SOIL TYPE

Soil Type (and classification)	Allowable Pressure (psf)
Rock or hard pan (class 1)	4,000
Sandy gravel and gravel; very dense and/or cemented sands; course gravel/cobbles; preloaded silts, clays and coral (class 2)	2,000
Sand; silty sand; clayey sand; silty gravel; medium dense course sands; sandy gravel; very stiff silt, sand clays (class 3)	1,500
Clay, sandy clay, silty clay, clayey silt (classes 4A and 4B)	1,000
Uncompacted fill, peat, organic clays (class 5)	Professional testing required

Note to table: No allowances made for overburden pressure, embedment depth, water table height, or settlement problems.

- **Use default capacity.** Use an allowable pressure of 1,500 psf, unless site-specific information requires the use of lower values based on soil classification and type according to **Table 4**.

Note that soil types may vary across a home site. In this case, the soil with the lowest bearing capacity should be assumed when designing the support system. Keep a record of the soil-bearing capacity value; it will be used later to design the home's support system.

FROST LINE

In climates subject to ground freezing, consult the LAHJ, a registered engineer, or registered architect to determine the depth of the frost line. **Figure 6** may be used as a guideline when there is no specific local determination. Keep a record of the frost depth; it will be used later to design the home's support system.

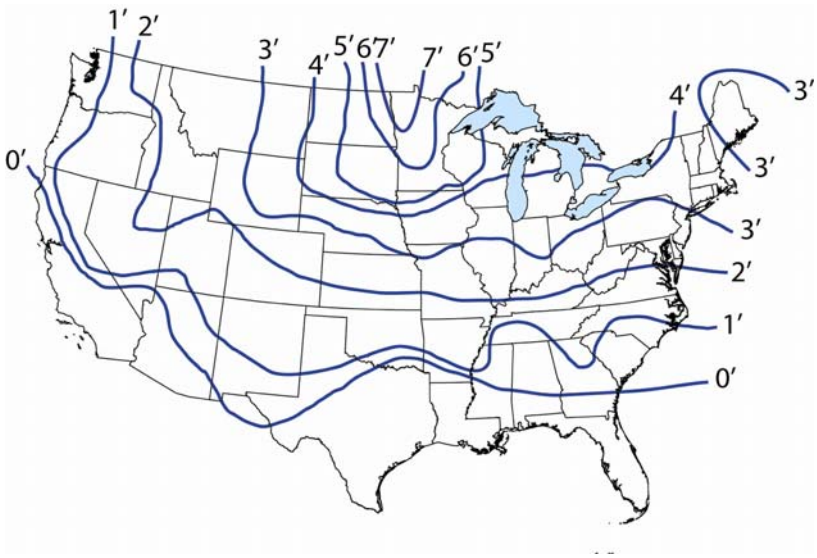

Figure 6. *Average frost penetration depth (in feet)*

Will this installation use auger-type ground anchors?

- ► **YES**, go to **STEP 6, DETERMINE GROUND ANCHOR HOLDING CAPACITY,** (p. 17).
- ► **NO**, go to **Construct Foundation,** (p. 32).

STEP 6. DETERMINE GROUND ANCHOR HOLDING CAPACITY

When using auger-type ground anchors to tie down the home, first, use a torque probe to determine the anchor-holding strength of the soil on the site.

Torque Probe. Before using the torque probe, check with the utility companies for the location of underground cables or pipes to avoid contact with the probe shaft.

Use a torque probe with a shaft of sufficient length to test the soil at the depth of the anchor helical plate. Augur the probe into the ground, and following the probe manufacturer's instructions, take the torque wrench reading in the area where the anchors will be installed and at the depth of the anchor helix. If the soil varies in consistency across the site, then use the lowest reading. Based on this reading, consult the anchor manufacturer's charts to select the anchor type(s).

What type of support system will this installation use?

- ► **For pier and ground anchor**, go to **Install Footings,** (p. 19)
- ► **For load-bearing perimeter wall**, go to **Construct Foundation,** (p. 32)

Install Footings

This chapter provides instructions for the design and construction of individual footings that transfer the load from a single pier to the ground. A footing and pier together (discussed in **Set the Home**) is referred to as a "support." A footing may also be designed to carry the load of multiple piers (often called "strip" footings).

Follow the Steps below:

- **STEP 1. DESIGN POINT LOAD SUPPORTS** (p. 19)
- **STEP 2. DESIGN FRAME SUPPORTS** (Homes Without Perimeter Blocking) (p. 21)
- **STEP 3. DESIGN FRAME AND PERIMETER SUPPORTS** (Homes With Perimeter Blocking) (p.23)
- **STEP 4. SELECT FOOTING MATERIALS** (p. 25)
- **STEP 5. SIZE FOOTINGS** (p. 25)
- **STEP 6. INSTALL FOOTINGS** (p. 29)

STEP 1. DESIGN POINT LOAD SUPPORTS

All homes will need supports, and therefore footings, under the frame, marriage line (for multi-section homes), exterior wall openings and other heavy point loads.

The home manufacturer may have provided a blocking diagram (or tags, labels, paint or other markings under the home) indicating the required locations and/or loads for perimeter, marriage line and/or frame supports specifically for this home. If so, the diagram or tags take precedence over the directions provided in this manual.

Create a sketch of the home that includes the exterior walls, the frame I-beams and the marriage line(s), if a multi-section home. The sketch will be used in this chapter to locate each support, and note the size of the corresponding footing. **Figure 7** is an example of such a support plan.

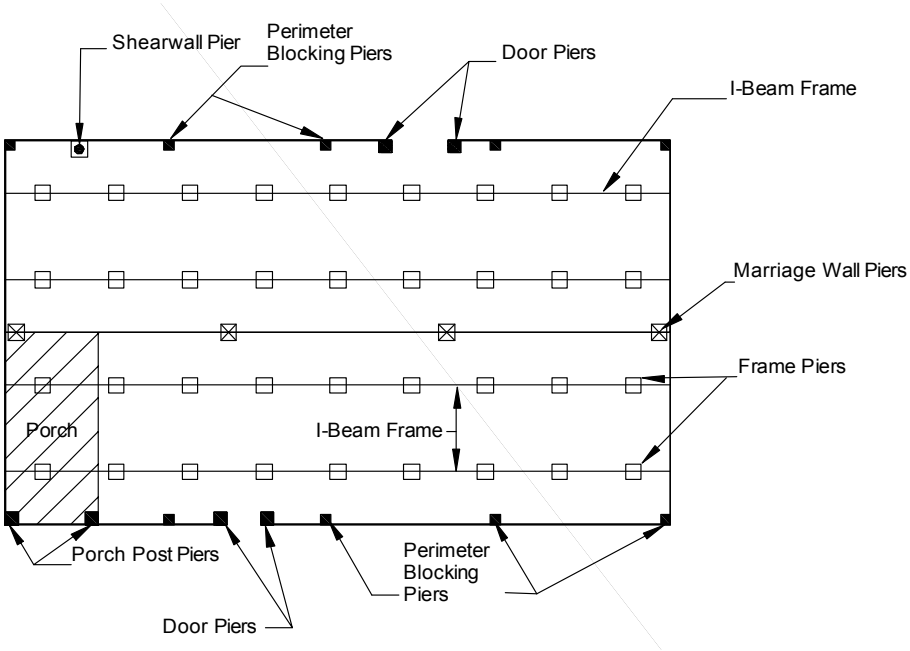

08-21-2009

Figure 7. *Example of support plan*

As the location and load for each support is determined, note it on the sketch. When selecting locations for supports, keep in mind that increasing the spacing between

supports will increase the load on that support and the size of the required footing.

DETERMINE LOCATIONS

Point loads exist where a bearing/structural weight is concentrated and transferred to the foundation at a specific point. Locate a support under each point load, including the following examples:

- Exterior doors on side walls at both sides of each door (blocking is not required at exterior doors on non-bearing end walls).
- Other exterior wall openings four feet and greater: a) under the jambs of individual openings four feet or greater; or b) for multiple windows of 4 feet or greater each, under the mullions and jambs; or c) for multiple windows less than 4 feet each, under the mullions only.
- Locations where through-the-rim crossover ducts penetrate the rim joist at the marriage line (unless otherwise noted in supplemental documents provided with the home or unless the home is constructed with a perimeter frame system).
- Marriage line columns.
- Load-bearing porch posts.
- Labeled G-2 strap locations (for shearwalls).
- Under heavy (400 lbs or greater) items, such as heavy furniture, waterbeds, fireplaces and large fish tanks located outboard of the home's main I-beams.

Mark the required point load support locations on the sketch. Supports are not required where the manufacturer has reinforced the floor (such as with additional outriggers or floor joists) and so noted in the documentation provided with the home. **Figure 8** identifies typical point load support locations.

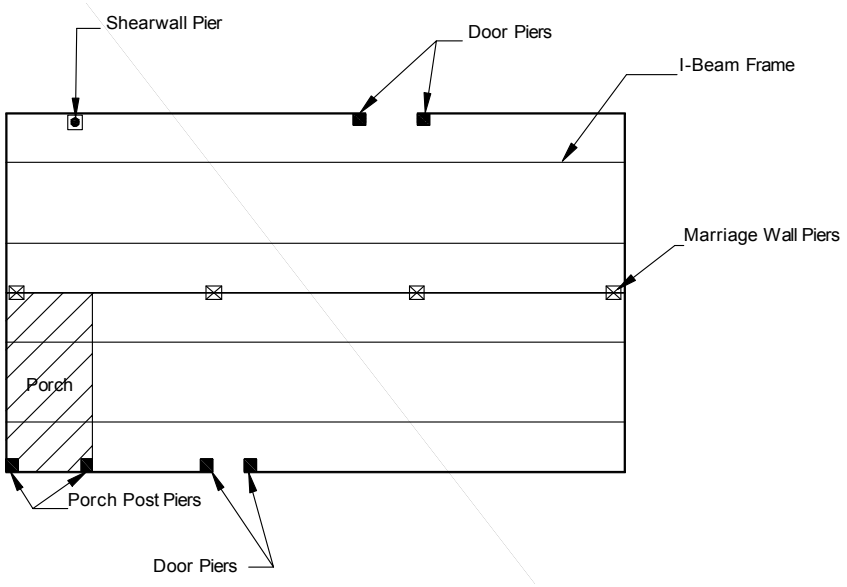

Figure 8. *Typical point-load support locations*

CALCULATE LOADS

Consult the specific plans for the home being installed. The location of the mating line piers is shown on the floor plan. The exact loads for any mating line piers are shown on the specification tables for that floor plan.

Determine from the data plate and/or other documents if the home requires perimeter blocking.

► If perimeter blocking is NOT required, go to **STEP 2, DESIGN FRAME SUPPORTS** (Homes Without Perimeter Blocking), (p. 21).

08-21-2009

► If perimeter blocking is required, go to **STEP 3, DESIGN FRAME AND PERIMETER SUPPORTS** (Homes With Perimeter Blocking), (p. 23).

STEP 2. DESIGN FRAME SUPPORTS (Homes Without Perimeter Blocking)

DETERMINE LOCATIONS

All homes require regularly spaced supports along all main frame I-beams. Select spacing between supports and sketch them on the support plan. Keep in mind that frame supports under homes with 8” deep I-beams may be no more than eight feet apart. Those under homes with 10” or 12” deep I-beams may be no more than 10 feet apart. Generally, greater distances between supports will require larger footings.

Figure 9 shows typical frame support locations.

Spacing frame supports. There must be a support located near the end of each I-beam such that there is no more than 12 inches of beam past the edge of the support.

Exception: A support may be located 24 inches maximum from the end of the I-beam for 10 and 12 wides if the next footing is located 3’-0” closer than specified in the tables (see **Figure 10**)

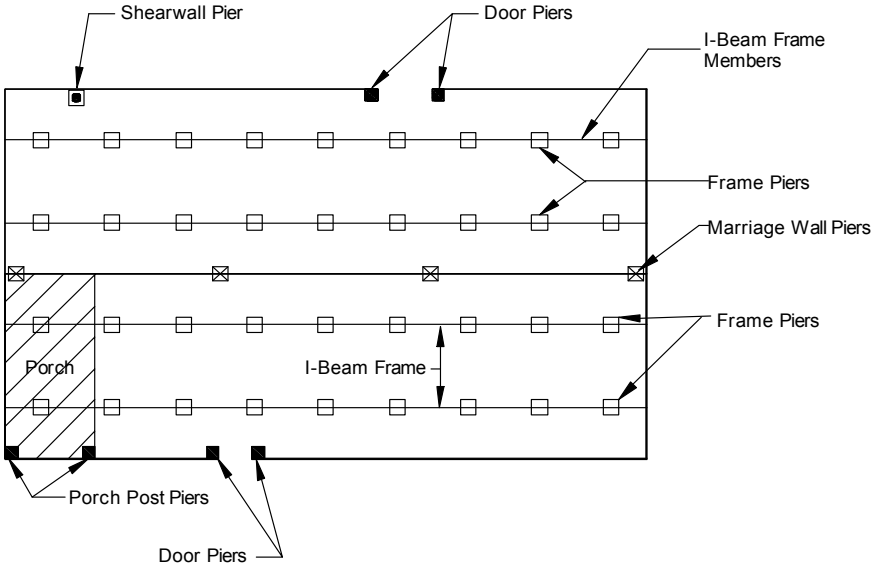

Figure 9. *Typical support locations for homes not requiring regularly spaced perimeter supports*

08-21-2009

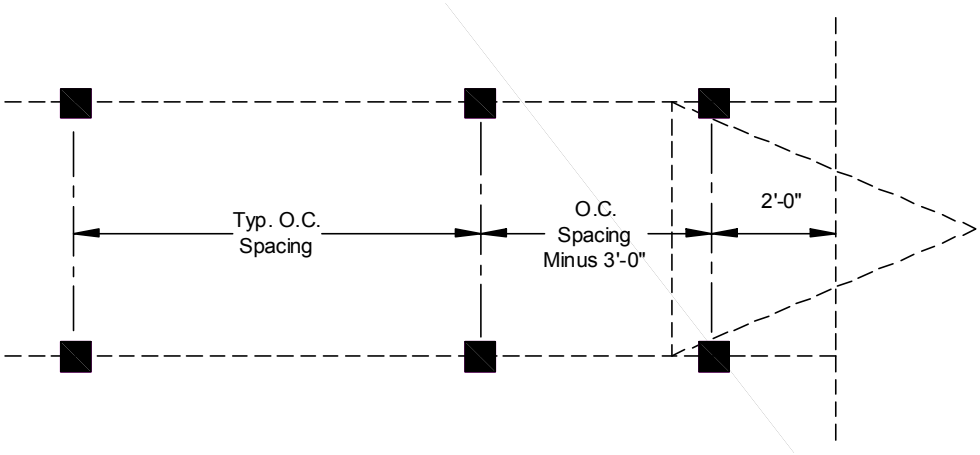

Figure 10. *End of beam piering exception*

CALCULATE LOADS

Use **Table 5** to determine the loads on frame supports. Find the column with the appropriate roof load zone and section width. Find the row corresponding to the selected support spacing. The number in the intersecting cell is the load.

Loads on all frame supports can be assumed to be equal if support spacing is equal. However, if different support spacings are used, then each support with a different spacing should be calculated separately.

Use **Table 6** to determine the loads on porch post piers. Find the column with the appropriate section width. Find the row corresponding to the roof load and porch post spacing. The number in the intersecting cell is the load.

Note the location and load required of each support on the sketch.

08-21-2009

TABLE 5. LOAD ON FRAME SUPPORTS FOR HOMES NOT REQUIRING PERIMETER BLOCKING

		Roof load zone and max. section width							
		South (20 psf)						Middle (30 psf)	North (40 psf)
		10 ft	12 ft	14 ft	15 ft	16 ft	18 ft	10 ft – 18 ft	10 ft – 18 ft
Maximum support spacing	4 ft	2100	2400	2700	2900	3000	3200	Perimeter Piering Required for 30 psf (See **Table 7**)	Perimeter Piering Required for 40 psf (See **Table 7**)
	5 ft	2600	2900	3300	3500	3700	3900		
	6 ft	3100	3400	3900	4200	4300	4700		
	8 ft	4000	4500	5100	5500	5600	6100		
	10 ft	4900	5500	6300	6800	7000	7500		

Eave width is 12” maximum for all home widths.

TABLE 6: SUPPORT LOADS ON PORCH POSTS

Roof Load	Max. support spacing	Max. section width				
		12 ft	14 ft	15 ft	16 ft	18 ft
20 psf	4 ft	750	850	900	1000	1200
	6 ft	1100	1300	1400	1500	1700
	8 ft	1500	1700	1800	2000	2200
30 psf	4 ft	1000	1150	1200	1300	1500
	6 ft	1450	1700	1800	2000	2200
	8 ft	2000	2300	2400	2600	2900
40 psf	4 ft	1200	1400	1500	1600	1800
	6 ft	1800	2100	2300	2400	2700
	8 ft	2400	2800	3000	3200	3600

► go to **STEP 4. SELECT FOOTING MATERIALS** (p. 25)

STEP 3. DESIGN FRAME AND PERIMETER SUPPORTS (Homes With Perimeter Blocking)

DETERMINE LOCATIONS

Depending on design and location, some homes require regularly spaced perimeter supports along all of the sidewalls and marriage walls in addition to frame supports. This will be indicated on the data plate and/or documents included with the home.

To minimize the number of required perimeter supports, space them evenly between point load supports as shown in **Figure 11**. These figures identify typical support locations for homes requiring perimeter supports.

Spacing frame supports. There must be a support located near the end of each I-beam such that there is no more than 12 inches of beam past the edge of the support.

Exception: A support may be located 24 inches maximum from the end of the I-beam for 10 and 12 wides if the next footing is located 3'-0" closer than specified in the tables (see **Figure 10**)

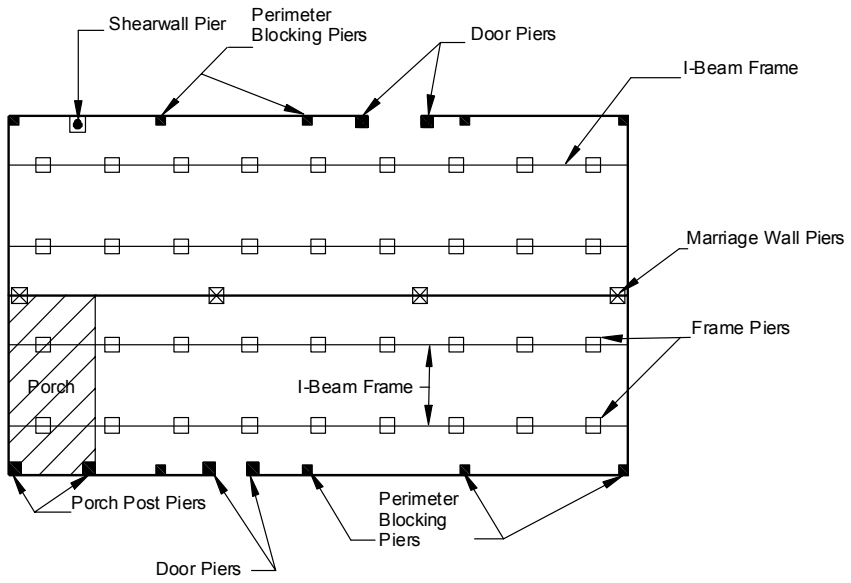

Figure 11. *Typical support locations for homes requiring perimeter supports*

CALCULATE LOADS

Use **Table 7** to determine the loads on frame and perimeter supports for homes requiring perimeter blocking. Find the column with the appropriate roof load (**Table 3**) and section width. Find the group of rows corresponding to the selected support spacing. The values in the intersecting cells are the loads for the frame, perimeter, and marriage line supports respectively.

Loads on supports of a given type (frame, perimeter, or marriage) can be assumed to be equal if support spacing is equal. However, if different support spacings are used then each support with a different spacing should be calculated separately.

Use **Table 6** to determine the loads on porch post piers. Find the column with the appropriate section width. Find the row corresponding to the roof load and porch post spacing. The number in the intersecting cell is the load.

Note the location and load required of each support on the sketch.

08-21-2009

TABLE 7. LOAD ON FRAME AND PERIMETER SUPPORTS FOR HOMES REQUIRING PERIMETER BLOCKING

		Roof load zone and max. section width											
		South (20 psf)						Middle (30 psf)					
Maximum spacing	Location	10 ft	12 ft	14 ft	15 ft	16 ft	18 ft	10 ft	12 ft	14 ft	15 ft	16 ft	18 ft
4 ft	Frame	1200	1300	1350	1400	1450	1500	1200	1300	1350	1400	1450	1500
	Perimeter	1300	1500	1700	1800	1900	2000	1500	1700	2000	2100	2200	2400
	Marriage	See Floor Plan instead						See Floor Plan instead					
5 ft	Frame	1400	1500	1700	1700	1800	1900	1400	1500	1700	1700	1800	1900
	Perimeter	1500	1700	2000	2200	2200	2400	1800	2100	2400	2600	2700	2900
	Marriage	See Floor Plan instead						See Floor Plan instead					
6 ft	Frame	1700	1800	1900	2000	2000	2100	1700	1800	1900	2000	2000	2100
	Perimeter	1700	2000	2300	2500	2600	2900	2100	2400	2800	3100	3200	3400
	Marriage	See Floor Plan instead						See Floor Plan instead					
8 ft	Frame	2100	2300	2400	2600	2600	2800	2100	2300	2400	2600	2600	2800
	Perimeter	2200	2600	3000	3300	3400	3700	2700	3100	3600	4000	4100	4500
	Marriage	See Floor Plan instead						See Floor Plan instead					
10 ft	Frame	2500	2700	3000	3100	3200	3400	2500	2700	3000	3100	3200	3400
	Perimeter	2700	3100	3700	4000	4100	4500	3300	3800	4400	4900	5000	5500
	Marriage	See Floor Plan instead						See Floor Plan instead					

		Roof load zone and max. section width					
		North (40 psf)					
Maximum spacing	Location	10 ft	12 ft	14 ft	15 ft	16 ft	18 ft
4 ft	Frame	1200	1300	1350	1400	1450	1500
	Perimeter	1800	2000	2300	2500	2600	2800
	Marriage	See Floor Plan instead					
5 ft	Frame	1400	1500	1700	1700	1800	1900
	Perimeter	2100	2400	2800	3000	3100	3400
	Marriage	See Floor Plan instead					
6 ft	Frame	1700	1800	1900	2000	2000	2100
	Perimeter	2500	2800	3300	3600	3700	4000
	Marriage	See Floor Plan instead					
8 ft	Frame	2100	2300	2400	2600	2600	2800
	Perimeter	3200	3700	4200	4600	4800	5200
	Marriage	See Floor Plan instead					
10 ft	Frame	2500	2700	3000	3100	3200	3400
	Perimeter	3900	4500	5200	5700	5900	6400
	Marriage	See Floor Plan instead					

Eave width is 12" maximum for all section widths

(Based on Table 2 to 3285.303)

08-21-2009

STEP 4. SELECT FOOTING MATERIAL

Select one of the products and materials from **Table 8** for the footings.

TABLE 8. FOOTING MATERIALS

Material	Appropriate Use	Specification
Poured concrete	All soil types	Minimum 6" thick poured-in-place concrete pads, slabs, or ribbons with at least a 28 day compressive strength of 3,000 psi. Cast-in-place concrete footings may also require reinforcing steel based on acceptable engineering practice, the design loads, and site specific soil conditions.
Pre-cast concrete	All soil types	Minimum 4" thick nominal precast concrete pads meeting or exceeding ASTM C 90–02a, Standard Specification for Load Bearing Concrete Masonry Units, without reinforcement, with at least a 28-day compressive strength of 2,500 psi.
ABS plastic	Stable soils	Use in accordance with the pad manufacturer's instructions. Must be certified for use in the soil classification at the site, listed and labeled for the required load capacity.
Pressure-treated Lumber	Stable soils	Two layers of nominal 2-inch thick wood x 30" maximum length, pressure-treated with a water-borne adhesive, in accordance with AWPA Standard U1-04 for Use Category 4B ground contact applications. Cut ends of pressure treated lumber must be field-treated in accordance with AWPA Standard M4-02.
Pressure-treated Plywood	Stable soils	Single layer of nominal 3/4 inch thick maximum 16 inch x 16 inch, or two layers of 3/4 inch thick for sizes greater than 16 inch x 16 inch. Rated exposure 1 or exterior sheathing in accordance with PS1-95, Construction and Industrial Plywood. Pressure-treated in accordance with AWPA Standard U1-04 for Use Category 4B ground contact applications.
Proprietary systems	Consult system manufacturer	Consult system manufacturer.

Will footings be concrete?

- ► **YES,** go to **STEP 5, SIZE FOOTINGS,** (p.25).
- ► **NO,** see footing system manufacturer's instructions. For on-grade footings, the ground moisture barrier may be installed now – see **Complete Exterior Work**, **STEP 2. INSTALL GROUND MOISTURE RETARDER** (p. 97) then go to **Set the Home** (p. 34).

Frost protection. When selecting footing materials, bear in mind the need for frost protection. Not all footing materials are suitable for freezing climates.

08-21-2009

STEP 5. SIZE FOOTINGS

Once the load on the footing and the soil-bearing capacity are known, calculate the size of each footing as follows:

1. From **Table 9** determine if the pier is to be of single-stack blocks (8 inch x16 inch) or double-stack blocks (16 inch x 16 inch) pier.
2. Locate the group of rows in **Table 10** with the soil-bearing capacity determined in **Prepare the Site, STEP 5. DETERMINE SOIL-BEARING CAPACITY AND FROST LINE** (p. 16). Use the next lowest value if the exact value does not appear.
3. Read across the table to determine the minimum required footing area and the minimum footing thickness for the corresponding footing type (single or double-stacked blocks).
4. The required footing size may be changed by selecting another support spacing (**Table 5** and **Table 7**).

TABLE 9. PIER CONFIGURATION

Pier location	Height	Configuration	Maximum load
Frame	Less than 36 in (except corner piers more than 3 blocks high)	Single-stack blocks with long side perpendicular to I-beam	8,000 lbs.
	Between 36 in and 67 in and corner piers over 3 blocks high	Double, interlocked blocks	16,000 lbs.
	Over 67 in	*Requires Specific Engineering*	
Perimeter	54 in or less	Single-stack blocks with long side parallel to perimeter rail (rim joist)	8,000 lbs.
Marriage line	54 in or less	Single-stack blocks with long side perpendicular to the marriage line	8,000 lbs.

08-21-2009

TABLE 10. FOOTING DIMENSIONS

Soil Bearing Capacity	Minimum Footing Size (in)	8 in. x 16 in. pier (single-stack blocks)		16 in. x 16 in. pier (double-stack blocks)	
		Unreinforced cast-in-place min. thickness (in.)	Maximum footing capacity (lbs)	Unreinforced cast-in-place min. thickness (in.)	Maximum footing capacity (lbs)
1000 psf	16x16	6	1600	6	1600
	20x20	6	2600	6	2600
	24x24	6	3700	6	3700
	30x30	8	5600	6	5800
	36x36	10	7900	8	8100
	42x42	10	8000	10	10700
	48x48	12	8000	10	14000
1500 psf	16x16	6	2500	6	2500
	20x20	6	4000	6	4000
	24x24	8	5600	6	5700
	30x30	10	8000	8	8800
	36x36	10	8000	8	12600
	42x42	12	8000	10	16000
2000 psf	16x16	6	3400	6	3400
	20x20	6	5300	6	5300
	24x24	8	7600	6	7700
	30x30	10	8000	8	11900
	36x36	12	8000	10	16000
2500 psf	16x16	6	4300	6	4300
	20x20	6	6700	6	6700
	24x24	8	8000	6	9700
	30x30	10	8000	8	15000
	36x36	12	8000	10	16000
3000 psf	16x16	6	5200	6	5200
	20x20	8	8000	6	8100
	24x24	10	8000	6	11700
	30x30	12	8000	8	16000
4000 psf	16x16	6	7000	6	7000
	20x20	8	8000	6	10900
	24x24	10	8000	8	15600
	30x30	12	8000	10	16000

Note: The capacity values listed have been reduced by the dead load of the concrete footing.

Design footings to comply with the following additional requirements:

- Design each footing at least slightly larger than the base of the pier it supports.
- To keep footings directly under I-beams and other support points, size them slightly larger than the minimum required area to allow slight adjustment of the pier location during home installation.
- Design footings with a footing extension (projection beyond the base of the pier) no greater than the footing thickness (**Figure 12**). Increase footing thickness if necessary.

08-21-2009

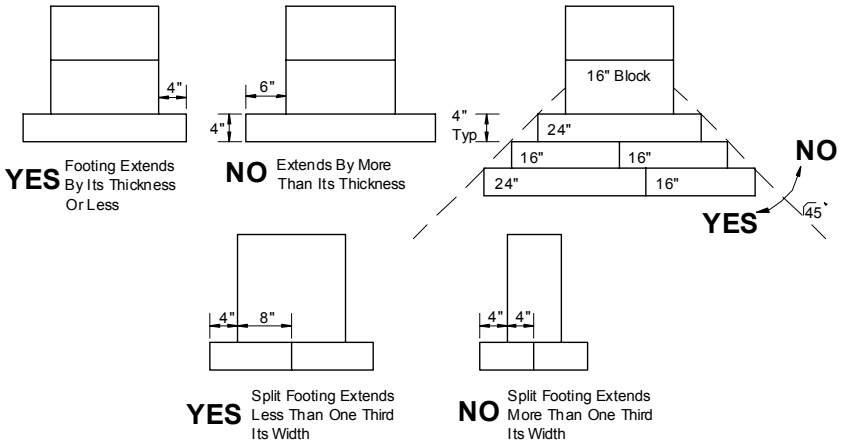

Figure 12. *Maximum footing extensions*

- The footing sizes shown are for square pads and are based on the surface area (square inches). Design non-square footings such that the area and depth is equal to or greater than the area and depth of the square footing shown in **Table 10**, and the distance from the edge of the pier to the edge of the footing is not more than the thickness of the footing. See **Table 11** for equivalent sizes of some alternate footing sizes and shapes. See **Figure 13** and **Figure 14** for details of certain multiple pad configurations.
- For four-inch thick unreinforced precast concrete footings, use the minimum footing size for the six-inch cast-in-place footing from **Table 10**.
- Concrete runners may be considered as an alternate to individual footings. Runners may be oriented full-length of home (parallel to the home main beams) or in a transverse direction. The size of the runner should meet or exceed the size of the footings shown in **Table 10**. Example: 30”x30”x8” footing may be replaced by a 30” wide x 8” thick concrete runner.

TABLE 11 FOOTING EQUIVALENTS

Unreinforced Cast-in-Place Concrete Size (inches)	16x16 Precast Concrete Pads	Round Cast-in-Place Concrete Diameter	2x12x24 Treated Lumber Pads (all double layers)
16x16	Single	20	Single
20x20	Double	24	Double
24x24	Quad	28	Triple
30x30	Quad	36	Two - Doubles
36x36	Double quad	42	Two - Triples
42x42	Double quad	48	n/a
48x48	n/a	56	n/a

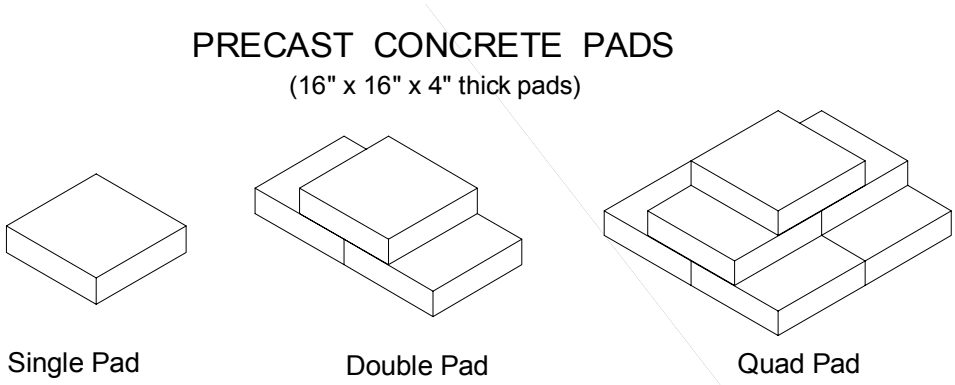

Figure 13. *Multiple Concrete Pads*

08-21-2009

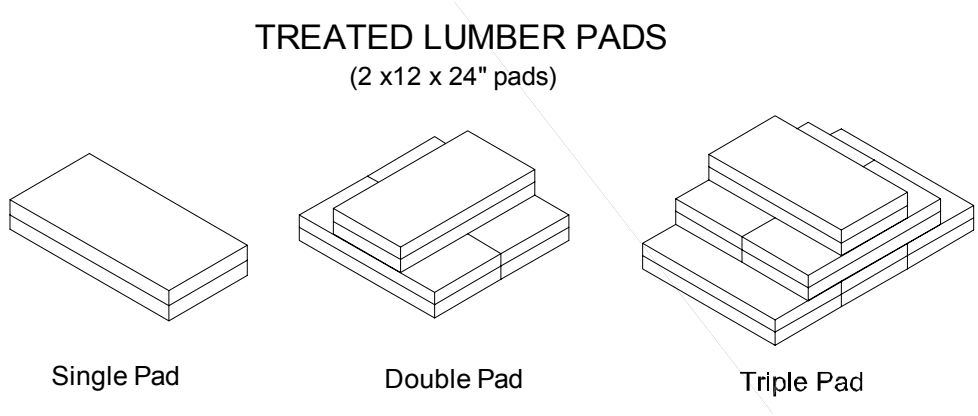

Figure 14. *Multiple Lumber Pads*

08-21-2009

STEP 6. INSTALL FOOTINGS

Construct the footings as follows:

- Maintain the distance between adjacent piers to within 10% of the tabulated spacing and so the average distance between any adjacent spans is equal to or less than the tabulated spacing.
- Whenever possible, place point load supports directly under the required locations. If plumbing, electrical, mechanical equipment interferes, place supports no more than 6 inches in either direction of the support point.
- Recess perimeter blocking supports and perimeter point load supports no more than 10 inches from the edge of the floor with added support as shown in **Figure 15**.

Placing Concrete anchors. If anchors will be placed in concrete, follow instructions in **Install Stabilizing System** (p. 67) to determine anchor layout. Either place anchors immediately after the concrete has been poured or drill them in after the concrete has set.

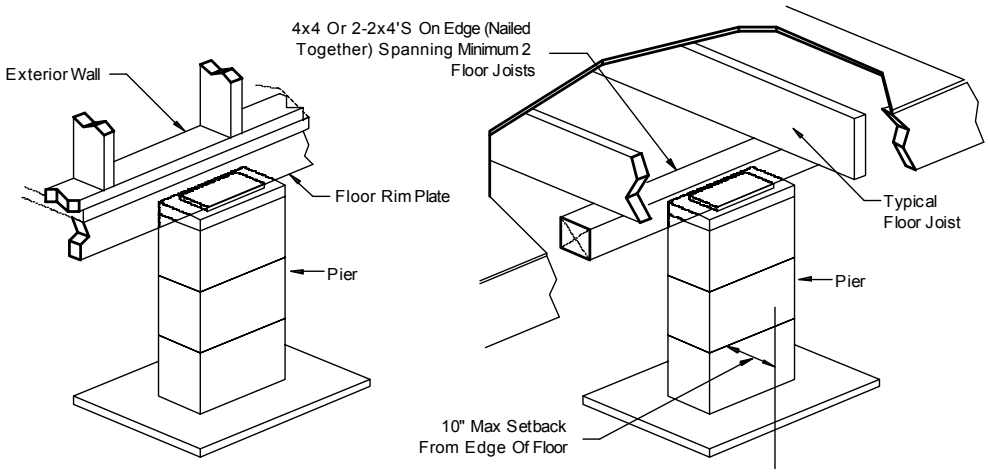

Figure 15. *Perimeter supports*

- If footings are rectangular, orient them so that the long side is perpendicular to the home's I-beam.
- Place the bottom of footings on undisturbed soil or fill compacted to at least 90% of its maximum relative density.
- In freezing climates protect footings from the effects of frost heave in accordance with any LAHJ requirements (see **Prepare the Site**, p. 14). Place the bottom of the footings below the frost line (insulated foundations and monolithic slabs are other frost protection options not covered in this manual).
- Make sure the top surface of the footing is level, flat, and smooth.
- In accordance with the American Concrete Institute publication ACI-308, maintain curing measures before construction or installation onto the concrete footing begins, until a minimum of 70% of the specified 28-day compressive strength has been achieved. The ACI recommended time to attain this level of

Excavation. If excavation is required, mark the footing locations on the ground with stakes before beginning to dig.

strength is seven days for ASTM C150 Type 1 mixtures and 10 days for Type II mixtures. Full design live and dead loads may not be applied until the 28-day duration has elapsed for achieving full strength.

- For multi-section units, the mating line piers may need special solutions. If a G-strap occurs at a support post, the piers can be arranged as shown in **Figure 16**. If the loads at the support post are large enough, it may be necessary to use double piers as shown in **Figure 17**. If a G-strap occurs where double piers are used, it may be necessary to add support beams as shown in **Figure 18**.
- **Figure 15** thru **Figure 18** are intended to show pier and footing placement. The actual pier construction shown (concrete block or commercial metal) is not meant to limit the type of pier that can be used. Any type of pier described in **Table 13** (p. 37) may be used in these configurations.

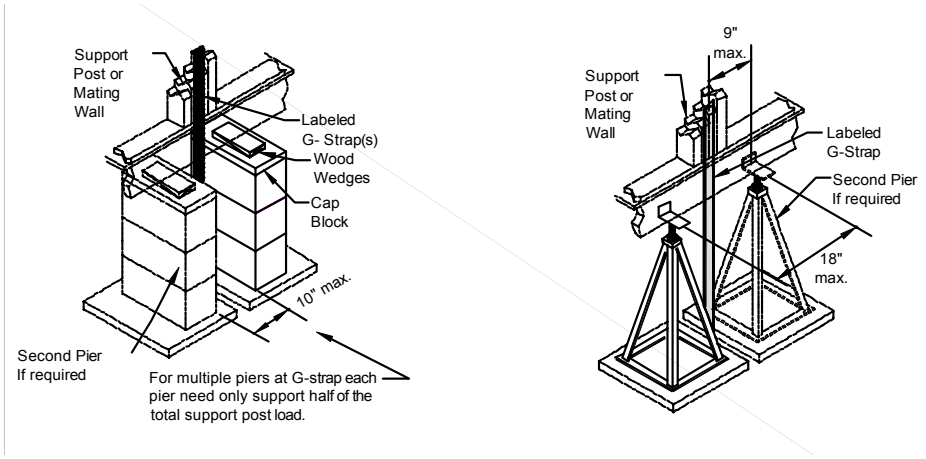

Figure 16. *Piers at Support Posts (with G-Strap)*

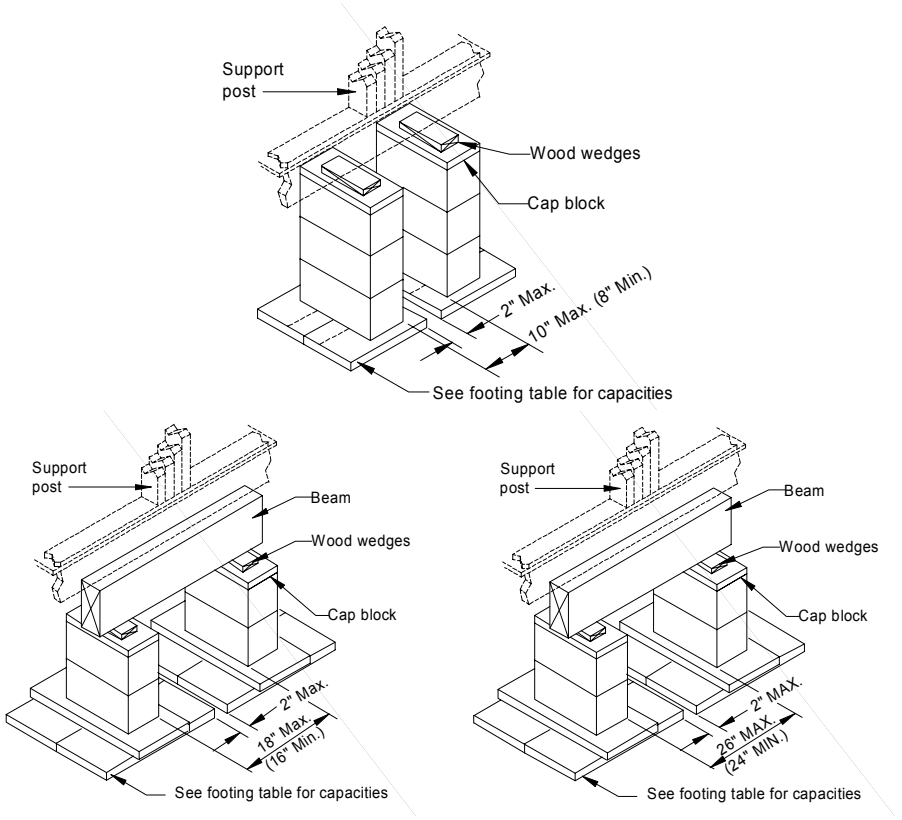

Figure 17. *Multiple piers at support posts*

08-21-2009

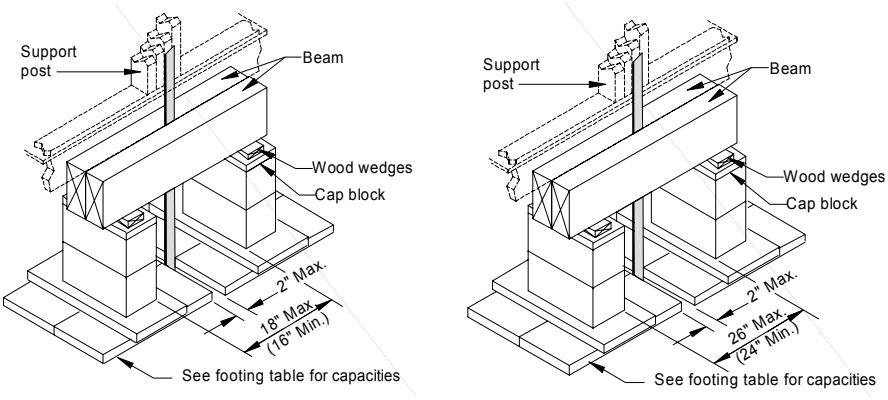

Figure 18. *Multiple piers and G-strap at support posts*

TABLE 12 BEAM SELECTION FOR MULTIPLE PIERING

Beam Configuration	Load Capacity (lbs) Spaced at Max. 18" and Min. 16"	Beam Configuration	Load Capacity (lbs) Spaced at Max. 26" and Min. 24"
2 – 2x10	9300	2 – 2x14	10500
3 – 2x10	17000	3 – 2x14	21500
1 – 4x10	12000	1 – 4x14	14000
2 – 2x12	12000		
3 – 2x12	23000		
1 – 4x12	16000		

1. Lumber to be minimum SPF #2 (may be treated or untreated)
2. Beams of the desired configuration may be selected from the appropriate table and used individually or in combinations to achieve the required capacity
3. Multiple 2X members shall be fastened together with 16d nails at 8" o.c. through both outer members

08-21-2009

► go to **Set the Home** (p. 34)

Construct Foundation

(FOR HOMES WITH LOAD-BEARING PERIMETER WALL)

This chapter provides guidelines and recommendations for the design and construction of a basement or crawlspace foundation using a load-bearing perimeter wall. A load-bearing perimeter wall foundation system uses a wall along the outer edge of the home to support the home's outside walls. This perimeter support works with interior supports such as piers, columns, and cross beams that support the home's frame and, if multi-section, marriage line.

Follow the Steps below:

- **STEP 1. OBTAIN A FOUNDATION DESIGN** (p. 32)
- **STEP 2. EXCAVATE** (p. 32)
- **STEP 3. CONSTRUCT THE FOOTING OR SLAB** (p. 32)
- **STEP 4. CONSTRUCT THE PERIMETER WALL** (p. 32)
- **STEP 5. INSTALL INTERIOR SUPPORTS** (p. 33)
- **STEP 6. WATERPROOF FOUNDATION WALL** (p. 33)
- **STEP 7. BACKFILL AND GRADE** (p. 33)

STEP 1. OBTAIN A FOUNDATION DESIGN

Complete plans for the construction of a typical permanent foundation with load-bearing perimeter walls are available from the home manufacturer. If such plans need modification, or if a completely new design is desired, it is the responsibility of the retailer and/or homeowner to provide a design approved by an engineer or architect, licensed in the state where the home will be installed. The approved design must comply with the LAHJ regulations for foundation design, waterproofing, and drainage, and the following:

- The foundation perimeter bearing wall must be supported with a concrete slab or continuous strip footing around the perimeter of the home. Interior piers must be supported by a slab or footings. If footings are used under interior piers, they may be designed as in **Install Footings**, p. 19.
- Slabs must extend to the edges of the home.
- Footings and slabs must be protected from the effects of frost heave by extending the footings to or below the frost line or by using a frost protected shallow foundation design.

STEP 2. EXCAVATE

Excavate for the foundation, properly disposing of the earth that is not needed for backfill or site-grading purposes.

STEP 3. CONSTRUCT THE FOOTINGS OR SLAB

Construct the foundation according to the approved design, including the perimeter foundation wall, drainage system, footing(s), and/or slab.

STEP 4. CONSTRUCT THE PERIMETER WALL

Unless the approved design requires otherwise, construct the perimeter wall with mortared and reinforced concrete blocks or reinforced poured-in-place concrete. Install reinforcement according to the approved design or LAHJ. Install ventilation and access openings according to the approved design, or if not specified, according to the requirements in **Complete Exterior Work, STEP 3 INSTALL SKIRTING** (p. 98).

When constructing pockets for an H-beam system, measure the beam depth and

Using engineered designs. This section is NOT intended to provide a complete design for a buildable foundation. A complete design must be obtained that is suitable for the local area and sealed by a professional engineer or registered architect, licensed in the state.

Foundation ready home. Make sure that homes to be installed on a basement or a crawlspace have been ordered with a recessed frame or as foundation-ready, where the frame is designed to avoid interference with the foundation wall. If the home has 2x6 exterior walls, check with the manufacturer to verify the home's overall dimensions as these may be increased 4" due to this type of construction.

Checking the water table. For basements, check for a high water table. The water

locate the pockets carefully. It is critical that when the home's frame rests on top of the H-beam, the perimeter of the floor rests squarely on the foundation wall sill plate (**Figure 19**).

Bolt a pressure treated wood sill plate (minimum 2 x 6) to the top of the foundation wall. Connect the home to the foundation according to the approved design. Recess nuts into the sill plate and cut off the ends of bolts so they do not project above the sill plate and interfere with the placement of the home.

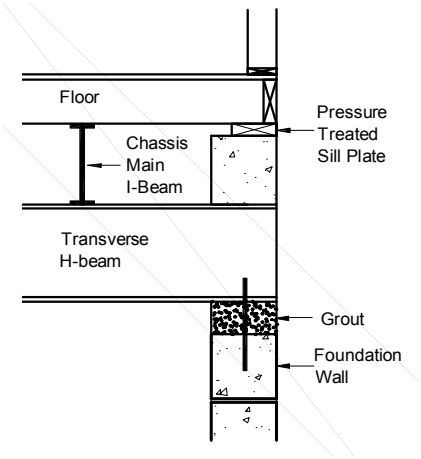

STEP 5. INSTALL INTERIOR SUPPORTS

Install piers, columns and H-beams to support the interior of the home according to the approved design.

STEP 6. DAMP PROOF FOUNDATION WALL

Damp proof the foundation wall no less than up to the height of the planned backfill.

Is this a basement foundation?

- ► **YES,** go to **Set the Home,** (p. 34).
- ► **NO,** go to **STEP 7. BACKFILL AND GRADE,** (p. 33)

STEP 7. BACKFILL AND GRADE

Backfill against the foundation wall to the height of the damp proofing. Take care to not damage the drainage system. Grade the fill as per **Prepare the Site** (p. 14).

Does the approved foundation design call for ground anchors?

- ► **YES,** go to **Install Stabilizing Systems,** (p. 67).
- ► **NO,** go to **Set the Home,** (p. 34).

table may vary seasonally or based on weather conditions. A geologist can perform an algae test to determine the water table level. The foundation design must account for a high water table.

Level the wall. Make sure the foundation is level and straight with no more than a 1/4 inch vertical variation over the entire foundation and no more than 1/8 inch vertical variation over any two-foot length.

Check for Plates. When using an H-beam system, check and compensate for reinforcement plates that add thickness to the chassis beam at axle locations.

Figure 19. *H-beam installation*

Limits of excavation. When a crane will be used, excavate no more than two feet outside the foundation perimeter. Unexcavated ground will provide a more stable base for the crane.

Footing heights. Pour footings to a height that will reduce the need to cut blocks or shim when building perimeter walls and piers.

Backfilling. Backfill against basement walls only after the home is connected to the foundation or the basement walls may deflect inward or collapse.

Set the Home

This chapter describes the process of installing the first section of the home (for single section homes this is the only section) onto the foundation.

Follow the Steps below:

- **STEP 1. PREPARE FOR SET** (p. 34)
- **STEP 2. POSITION HOME SECTION** (p. 34)
- **STEP 3. LIFT HOME** (p. 34)
- **STEP 4. CONSTRUCT PIERS** (p. 36)

STEP 1. PREPARE FOR SET

Before beginning the home set, complete the following:

- Confirm that the site is properly cleared and graded (see **Prepare the Site**, p. 14.
- Ensure that the footings are in place and properly located.
- Install any utilities that will be difficult to install (e.g. those below grade beneath the home) after the home is in place.
- Secure or remove from the home and properly store all ship loose items (refer to shipping documents for items shipped with the home).
- Inspect the home interior, exterior and all provided materials, appliances, and equipment. Immediately report any damage or shortages to the manufacturer.
- The ground moisture retarder must be installed now or after the home is complete. If the retarder is to be installed now, see **Complete Exterior Work, STEP 2. INSTALL GROUND MOISTURE RETARDER** (p. 97) for requirement and then return here.

For perimeter bearing wall foundations:

- Check that the length and width of the home match with the foundation walls.
- Check that the two main diagonal measurements of the foundation are equal.
- Check that the foundation walls and other support points are within 1/4 inch of level between any adjacent piers or any eight foot distance, whichever is less.
- For multi-section homes, check that each pair of diagonal measurements for each portion of the foundation corresponding to a home section are equal.
- For multi-section homes, find the electrical bonding lugs on the front or rear outriggers. Reverse them to the inside of the outrigger using star washers so they will be accessible after the home is placed on the foundation walls.
- If using an H-beam system, remove the frame's shackle hanger if it will interfere with proper placement of the beam.

STEP 2. POSITION HOME SECTION

Position the home section in its final location (if possible, move the heaviest section of the home into place first). Then place materials needed to construct support piers near their final locations under the home as determined in **Install Footings,** (p. 19).

STEP 3. LIFT HOME

There are three primary methods available to place the home on the foundation: jacking, rolling and craning. Jacks, often with roller systems, are typically used for pier and anchor foundations; roller systems are commonly used for crawlspace foundations with load-bearing perimeter walls; and cranes are most commonly used for basement

Clearances under the home. After the home is leveled, the resulting distance between the bottom of the entire chassis main frame beam and the ground must be no less than 12 inches.

Utilize proper cribbing. Manufactured homes weigh several tons. No one should be under the home (whether it is moving or stationary) unless proper cribbing is in place (**Figure 20**). Failure to utilize proper cribbing may result in serious injury or death.

Leveling during jacking. Keep the home's floor as level as possible during jacking. Twisting or warping the floor can damage the structure and finishing. Use as many jacks as necessary to keep the floor flat and level.

foundations.

JACKS

If jacks are to be used, comply with all jacking safety precautions and the procedure below. Lifting the home with jacks involves potential risks and must be done with utmost care and caution. Failure to follow jacking warnings and procedures may result in serious injury or death. Please read the Jacking Safety Precautions before lifting the home with jacks.

JACKING SAFETY PRECAUTIONS

- No one should be under the home's I-beams while the jacks are being operated or while the home is supported only on the jacks.
- Use jacks only for raising the home. Do not rely on the jacks to support the home.
- If possible, raise the home only on one side so that the other side is in contact with the ground. Leave the hitch connected to the vehicle or other stabilizing equipment.
- Obey all OSHA regulations.
- Make sure adequate safety cribbing (**Figure 20**) is in place whenever the home is placed on jacks.
- Use a minimum of two commercial quality jacks, each with a rating of at least 12 tons.
- Jack only on the main chassis I-beam, centering jacks directly under the beam.
- Do not jack on a seam (joint between flanges of twin I-beams).
- To distribute the concentrated loads from jacks to I-beam, place a minimum 3/8-inch thick steel plate, a C-channel, a 1½-inch thick hardwood block or a commercial jacking plate, between the main chassis I-beam and the jack head.
- Locate the jack base on firm ground. Never jack on freshly disturbed soil or where an underground sewer pipe may be located.
- Use a firm support under the jack base to prevent tipping or settling of the jack. A minimum 16" x 16" or larger wood or rigid fiberglass pad is recommended. Never use concrete blocks as a support for a jack.

Follow the jacking sequence outlined below to avoid overstressing structural members:

1. **Block wheels.** Block the wheels so the house does not roll.
2. **Install cribbing**. Install safety cribbing (**Figure 20**).

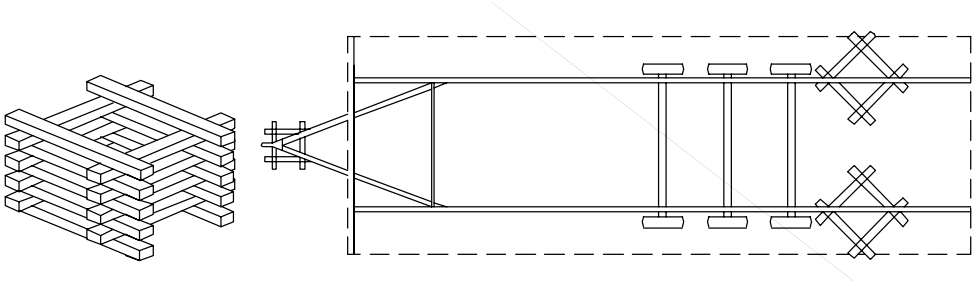

Figure 20. *Stack 4" x 6" by 5' long timbers as shown to form safety timbers. Place safety timbers under home behind axle area and under hitch.*

3. **Level lengthwise.** Locate one jack at the hitch and level the section lengthwise (such that the front and rear of the section are at the same height).
4. **Locate frame jacks.** Place a minimum of one jack just forward of the first spring hanger and another just behind the last spring hanger of the I-beam on the side of the home that is lowest (making sure not to place jacks where the piers will go). Place jacks no more than 20 feet apart and no more than 20 feet from each end of the I-beam.
5. **Lift the home.** Operating the jacks simultaneously (or sequentially in very small increments), lift the home section until it is slightly higher than the final desired pier height.

ROLLER SYSTEMS
When using a roller system, comply with the equipment manufacturer's directions and the following sequence:

1. **Establish staging area.** Establish a staging area directly adjacent to one or both sides of the foundation.
2. **Setup rollers.** Set up the roller system according to the equipment manufacturer's directions.
3. **Fasten bump blocks.** Temporarily fasten wooden bump blocks on the sill plates at the ends of the foundation to stop the home from rolling at the desired location.
4. **Roll home.** Roll the home into place over the foundation.
5. **Remove bump blocks.** Remove the blocks before installing the next section of a multi-section home.

CRANES
When using a crane, follow these guidelines:

- Position the home section(s) and crane (taking the boom reach into consideration) such that they do not have to be repositioned during the set.
- Use enough properly sized straps to maintain balance of the home and to prevent damage to the structure.
- Place straps under walls or posts, including temporary posts used to support the opening. Do not position lifting straps under marriage wall openings.
- Use a properly sized spreader bar to maintain a vertical lift, to avoid placing compression forces on the eaves and to reduce any tendency to slip.
- Connect a rope to at least one point on the home so it can be controlled while aloft.
- Make provisions to retrieve the straps/cables after the home is set. If using a cradle system, notch the sill plate where the straps will fall. For a sling system, notch and reinforce the home's rim joist to keep the strap from slipping and allow the strap to be removed after the home is set.
- Always set the home section farthest from the crane first so that subsequent section(s) need not be lifted over previously set sections.

Have the interior foundation supports already been designed and installed as part of an approved load-bearing perimeter wall foundation?

► **YES,** go to **Complete Multi-Section Set,** (p. 40) or go to **Connect Utilities,** (p. 79) for single section homes.
► **NO,** go to **STEP 4. INSTALL PIERS,** (p. 36).

STEP 4. CONSTRUCT PIERS

For the side of the home section that is up on jacks, place piers on footings or pads following the home manufacturer's blocking plan (or tags). If no plan was provided, use the support plan developed in **Install Footings** (p. 19). Start at one end of the home section and work toward the other noting the required pier material specifications and procedure described below.

Construct piers so as to provide a stable foundation for the home using materials listed in the specifications box below and based on the location of the pier and its height as measured from the top of the footing or pad to the top of the cap. See **Table 14** for pier construction requirements.

Designing piers. Incorrect size, location or spacing of piers may result in serious structural damage to the home. Install piers at all required locations. Failure to do so may lead to sagging floors, walls, and roofs, and could void the home's warranty.

TABLE 13. PIER MATERIAL MINIMUM SPECIFICATIONS

Component	Specification
Concrete Block	Nominal dimensions of at least 8” x 8” x 16”; minimum load 8,000 lbs; confirming to ASTM designation C90, grade N.
Caps	Solid masonry (nominal 4” x 8” x 16” pre-cast concrete without reinforcement); pressure treated lumber (nominal 2” x 8” x 16”); or steel (minimum 1/2” thick, corrosion protected by a min. of a 10 mil coating of an exterior paint or equivalent).
Spacers	Nominal 2” thick boards.
Shims (also called wedges)	Hardwood, minimum 4” width by minimum 6” length by maximum 1” thick (nominal); plastic must be listed with maximum load capacity; used in pairs.
Commercial metal or pre-cast concrete piers	Available in various sizes stamped with maximum load capacity and listed or labeled for the required vertical load capacity, and where required by design, for the appropriate horizontal load capacity.

TABLE 14. PIER CONSTRUCTION

Pier location	Height	Configuration	Maximum offset top to bottom	Maximum load	Mortar and reinforcement
Frame	Less than 36 in	Single-stack blocks with long side perpendicular to I-beam	½”	8,000 lbs.	Not required
	Between 36 in and 67 in	Double, interlocked blocks	1” (½” up to 36” high)	16,000 lbs.	Not required
	Over 67 in	Designed by a registered engineer or registered architect			
Corner	Three or less blocks high	Single-stack blocks with long side parallel to I-beam	½”	8,000 lbs.	Not required
	Over three blocks high, up to 67 in	Double, interlocked blocks	1” (½” up to 36” high)	16,000 lbs.	Not required
	Over 67 in	Designed by a registered engineer or registered architect			
Perimeter	54 in or less*	Single-stack blocks with long side parallel to perimeter rail (rim joist)	½” up to 36” high, 1” over 36” high	8,000 lbs.	Not required
Marriage line	54 in or less*	Single-stack blocks with long side perpendicular to the marriage line	½” up to 36” high, 1” over 36” high	8,000 lbs.	Not required

* Construct perimeter and marriage line piers over 54 inches according to the requirements for frame piers of the same height.

1. **Prepare footing surface.** Make sure the footing surface upon which the pier sits is flat and smooth. Before placing the pier on the footing, clean dirt, rocks, or other material off the surface of the footing. For cast-in-place concrete footings, if the footing surface is uneven, create a level, flat surface by placing a treated board on the footing and mortaring on the first block (or manufactured pier base), or by placing the first block (or manufactured pier base) on a layer of premix dry sand mortar.
2. **Stack blocks.** Stack concrete blocks with their hollow cells aligned vertically. When piers are constructed of blocks stacked side-by-side, orient each layer at right angles to the previous one (**Figure 21**) and plan blocks so that split caps will be perpendicular to the blocks they rest on and to the I-beam.

08-21-2009

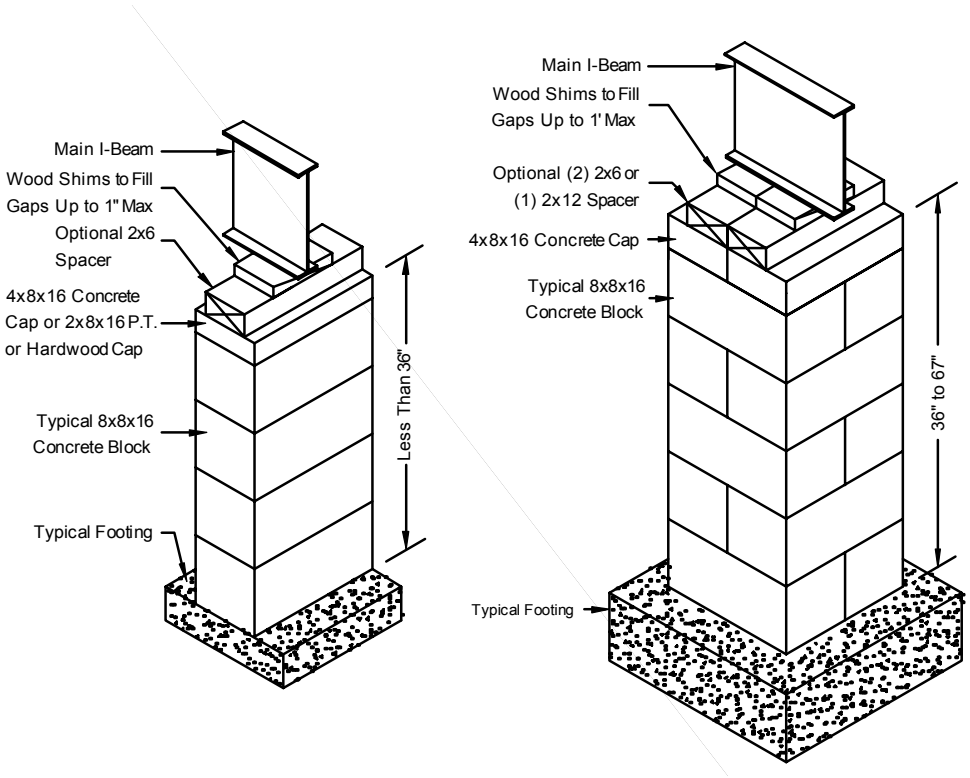

Figure 21. *Frame pier construction*

08-21-2009

3. **Cap piers.** Place a cap on hollow block piers to evenly distribute the structural load. Use caps the same length and width as the piers they rest upon. When using split caps on double-stacked block piers, install the caps with the long dimension perpendicular to the joint in the blocks below and to the main I-beam.
4. **Install shims.** Use shims to level the home and fill any gaps between the base of the I-beam and the top of the pier cap. Always use shims in pairs (**Figure 22**). Drive them in tightly so they do not occupy more than one inch of vertical space. When the space to be shimmed is greater than one inch and less than the minimum thickness of available caps or concrete blocks, use hardwood dimensional lumber (two inches maximum thickness) or 2" or 4" thick concrete block. For split caps, install shims and dimensional lumber/blocks over each individual cap.

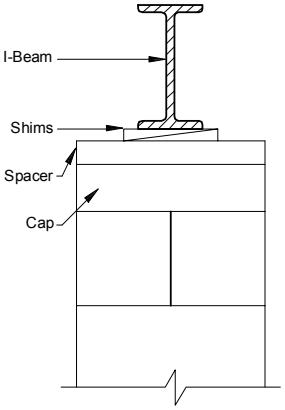

5. **Set up level.** Set up a water level with the fluid level at the desired height of the main piers. Carefully lower the side of the section down onto the leveled piers, adjusting the final height with shims.

Curing time of mortar. Where wet mortar is used to construct or level piers, allow it to cure to at least 80% of strength capacity (usually requiring 96 hours) before setting the home.

Figure 22. *Correct shim placement*

Dimensions of masonry perimeter walls. If using a masonry perimeter enclosure, calculate pier heights so that the enclosure can be built using standard unit dimensions (without cutting).

USING A WATER LEVEL
A water level is a standard device for leveling the home. The level consists of the following components:

- One container (five gallon bucket or one gallon jug).
- 150 feet of 1/2 inch diameter plastic tubing.
- Fittings for container to tubing.
- Valve for terminal end of tubing.
- Liquid for system: colored water in warm climates, windshield washing fluid in cold climates.

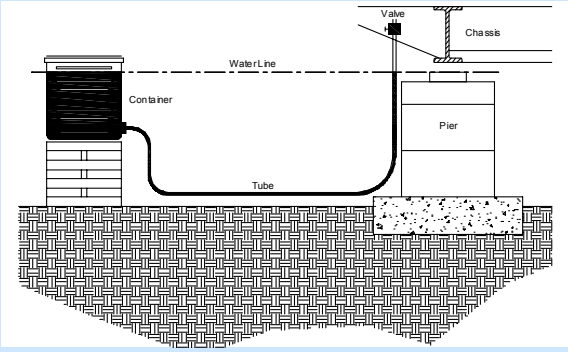

How to use a water level

a. **Position level.** Position the level such that it can reach all piers.

b. **Place container.** Place the container so that the fluid in the container is at the same level as the desired level of the top of the supports under the home, allowing for any bracing below the level of the I-beams.

c. **Uncoil tubing.** Uncoil the tubing and fill with fluid, taking care not to introduce bubbles into the hose. Never allow anything to crimp or crush the tubing so as to impede the free flow of fluid.

d. **Bleed air.** Hold the valve below the level of the water container; open the valve to bleed out any air and close the valve.

e. **Establish height.** Locate the tubing adjacent to a pier that is set to the desired final height. Position the valve above the pier and open the valve. Move the water container up or down to where the water level is at the desired final height of the pier. Maintain the water container in that position and close the valve.

f. **Level piers.** Move the tubing to the next pier. Hold the valve above the pier and open it. Set the pier height to the level of the water in the tubing and close the valve. Repeat this step until all piers are at the same level.

6. **Complete the opposite side.** Jack the other side of the section up and install piers following the instructions above. At the completion of this step, the section should be level from front to rear and from side to side.
7. **Install perimeter and marriage line piers.** Install perimeter piers and for multi-section homes, marriage line piers. Position marriage line piers to provide equal bearing for both mating sections.
8. **Remove running gear.** Remove and store, recycle or properly dispose of the hitch, axles, and wheels. These items are the property of the homeowner unless other contractual arrangements have been made.

Is this a single-section home?

► **YES,** go to **Connect Utilities,** (p. 79).

► **NO,** go to **Complete Multi-Section Set,** (p. 40).

Level the home. The home is adequately leveled if there is no more than 1/4 inch difference between adjacent pier supports (frame or perimeter) and the exterior doors and windows of the home do not bind and can be properly operated.

Water level operation. To operate the water level properly, both ends of the system must be open to the atmosphere and there must be approximately the same amount of fluid in the tubing at all times (within a few inches).

Complete Multi-Section Set

This chapter covers the preparation and installation of additional home sections, including the structural connections between units, raising and fastening hinged roofs, and fastening the home to a load-bearing perimeter wall foundation.

Follow the Steps below:

- **STEP 1. INSTALL MARRIAGE LINE ANCHORS** (p. 40)
- **STEP 2. REMOVE PROTECTIVE SHIPPING MATERIALS** (p. 40)
- **STEP 3. COMPLETE HINGED ROOF** (p. 40)
- **STEP 4. REPAIR OR INSTALL MARRIAGE LINE GASKET** (p. 43)
- **STEP 5. POSITION ADDITIONAL HOME SECTIONS** (p. 44)
- **STEP 6. CONNECT FLOORS** (p. 45)
- **STEP 7. CONNECT ROOF** (p. 46)
- **STEP 8. CONNECT WALLS** (p. 49)
- **STEP 9. ATTACH TAG UNITS** (p. 51)
- **STEP 10. REMOVE TEMPORARY ITEMS** (p. 52)
- **STEP 11. FASTEN HOME TO FOUNDATION** (p. 52)
- **STEP 12. BACKFILL AND GRADE** (p. 52)
- **STEP 13. BUILD STAIRS** (p. 52)

STEP 1. INSTALL MARRIAGE LINE ANCHORS

If the home is in Wind Zone II or III, install ground anchors along the marriage line now; before mating sections are joined see **Install Stabilizing System** (p. 67). After installing marriage line anchors return to this point in **Complete Multi-Section Set**.

STEP 2. REMOVE PROTECTIVE SHIPPING MATERIALS

Remove all shipping protection and associated fasteners from both home sections to be joined, including plastic used to close up the open sides during transportation. Do not remove the temporary supports holding up the ceilings at major openings.

STEP 3. COMPLETE HINGED ROOF

If the home has a hinged roof that has been folded down for shipping, raise the roof using a crane or roof jacks following the procedure below:

1. **Position lift points.** Position the roof lift points (jacks or crane lift points) following the jack manufacturer or crane operator instructions. Space roof lift points equally along the length of the roof with no more than five feet from the end of the roof to the first or last lift points. Use three lift points for a roof up to 48 feet long (excluding overhangs), four lift points for up to 60 feet, and five lift points for up to 76 feet.
2. **Remove fasteners.** Remove any temporary fasteners connecting the hinged portion of the roof to the vertical king posts.
3. **Lift roof.** Raise the roof to its intended height. A temporary slight overexten-

Position roof jacks. Position jacks vertically to prevent the jack foot from kicking out or sliding.

Caution during roof raising. Do not enter the roof cavity during the raising procedure.

Checklists for alternate construction. If the serial number (see the data plate or the chassis front cross member) has the letters “AC” before or after it, then the Alternate Construction on-site check list supplied with the home must be completed and returned to the home manufacturer in a timely manner. If the AC

sion may be required during lifting. However, take care not to overextend the roof and damage the hinge. Raise the roof evenly in small increments, keeping it level throughout the entire process to prevent racking. Do not allow roofing paper and shingles to get caught in the hinge crease.

4. **Secure king posts.** Position the hinged king posts atop the fixed king posts or against the wooden stop (**Figure 23**). The king posts are hinged to the underside of the hinged-truss top chord. Position them as needed to level the roof, aligning each hinged king post with the king post directly beneath it, and securing in place using straps, sheathing and fasteners as shown in **Figure 24**, **Figure 25**, **Figure 26** and **Table 15** and **Table 16**.

checklist relates to the roof, then failure to do so may require future disassembly of the roof and further inspections.

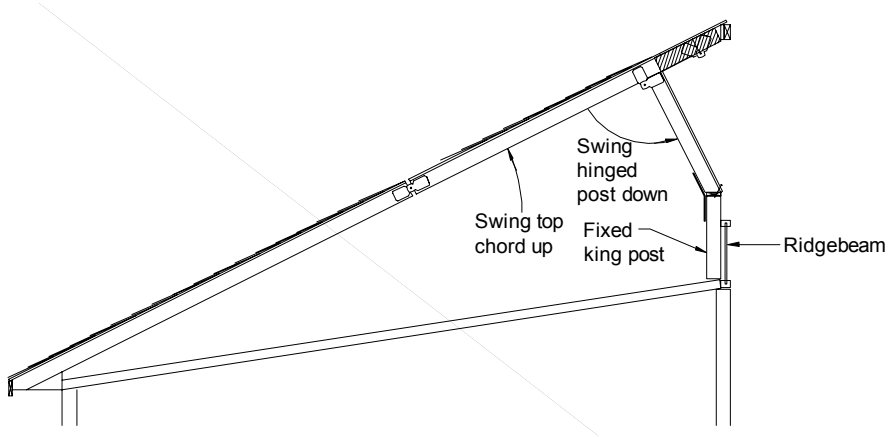

Figure 23. *Hinged Roof Truss (drawing is typical, actual configuration may vary)*

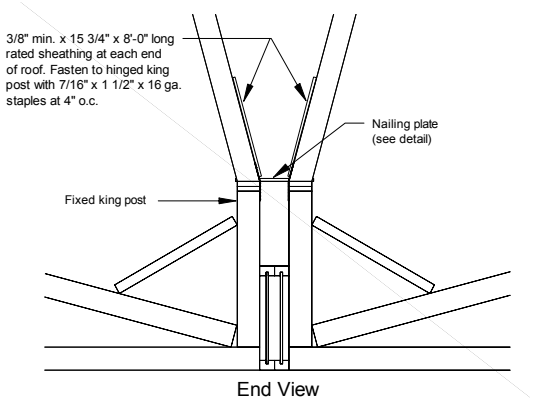

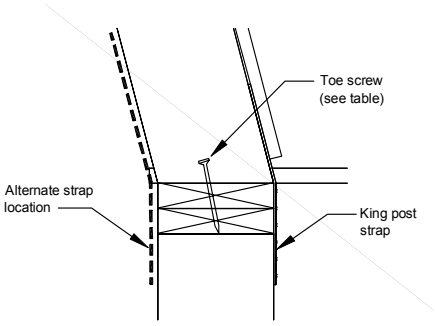

Figure 24. *Connection of Hinged King Post to Fixed King Post*
Figure 25. *Toe-Screw at 1x Plates*

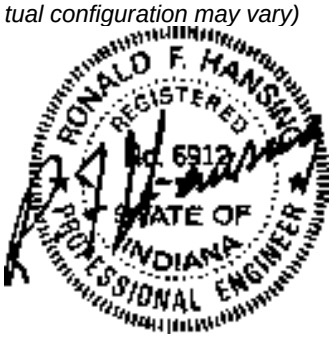

08-21-2009

TABLE 15. HINGED ROOF KING POST STRAP SPECIFICATIONS

Fastener		Spacing		
Type	Size	Wind Zone I	Wind Zone II	Wind Zone III
King post strap	1-1/2” x 6” x 26 gauge	Every third rafter	Every rafter	Every rafter
Staple into strap	7/16” x 1” x 16 gauge	6 each in each end	6 each in each end	6 each in each end

TABLE 16. HINGED ROOF PLATE CONNECTION SPECIFICATIONS

Fastener		Number		
Type	Size	4:12 max slope	6:12 max slope	7:12 max slope
Toe-screw thru hinged king post	#8 x 3” wood screw	none	2 per knee brace	4 per knee brace
Connecting 1x plates	8d x 2-1/2” nail	2 rows at 7-1/2 in	2 rows at 7-1/2 in	2 rows at 5-1/2 in

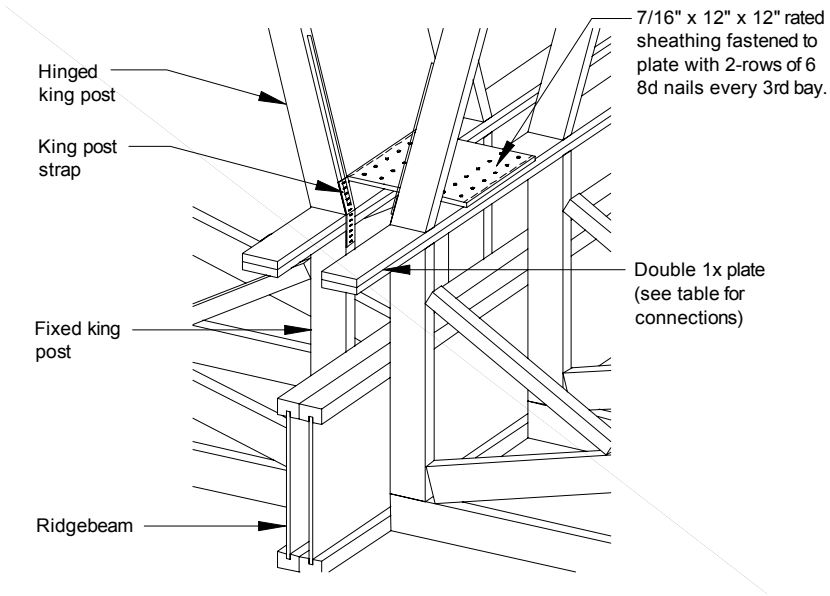

Figure 26. *King Post and Plate Connections*

08-21-2009

5. **Ridge filler option.** If the roof has a ridge filler to finish the roof peak as shown in **Figure 27**, care should be taken to insure that the hinged rafter design can accommodate the additional loads imposed by the ridge filler. Fasten ledger to hinged top chord as shown in **Figure 28**. Ridge filler section rafters are not required to align with main unit rafters. Wood filler shims up to 1 inch thick may be installed between ridge filler assembly and ledger to facilitate proper fit but fastener lengths must be increased accordingly. Fasten ridge filler section together as shown in **Figure 29**.

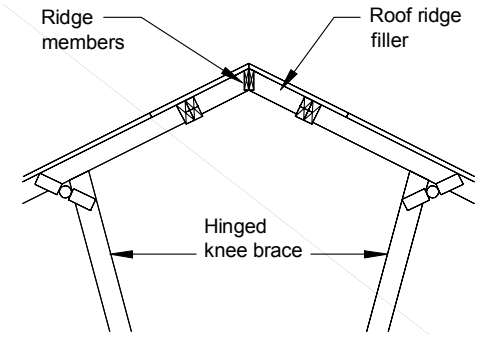

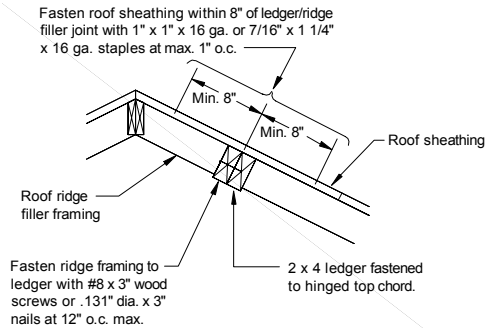

Figure 27. *Ridge Filler Option for Hinged Roof*
Figure 28. *Ridge Filler Connection to Hinged Top Chord*

6. **Roof sheathing**. Fasten roof sheathing with 1" x 1-1/4" x 16 ga. or 7/16" x 1-1/4" x 16 ga. staples at 6 inches maximum at panel edges and 12 inches maximum at intermediate rafters. See **Figure 28** for increased fastening on either side of joint if roof has the ridge filler option.

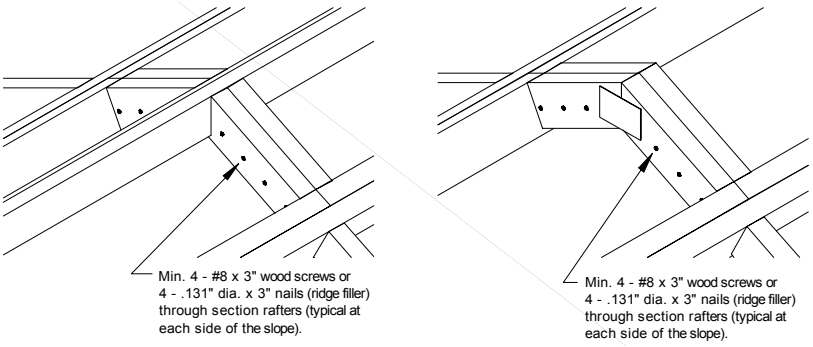

Figure 29. *Ridge Filler Section Connection*

7. **Redistribute Insulation.** Before closing up the attic space check that the insulation has not shifted. Re-level the insulation if needed.
8. **Install gable walls.** Install the gable end walls for each home section as follows (**Figure 30**):
   - Studs: Install minimum 1x3 (flat) studs 16 inches o.c. and fasten to truss top and bottom chords and diagonals with (2) 7/16" x 2" x 16 ga. staples or 6d nails and;
   - Sheathing: Install sheathing or siding with 7/16" x 1-1/2" x 16 ga. staple or 6d nail at 6 inches o.c. At least two edges of each piece of sheathing must be supported by framing members.
   - House wrap: Plant-supplied house wrap material must be installed over any rated sheathing underlayment as a weather-resistive barrier to prevent contact with any lap siding. Material may be secure with sufficient staples or tape to hold in place until exterior siding is applied.

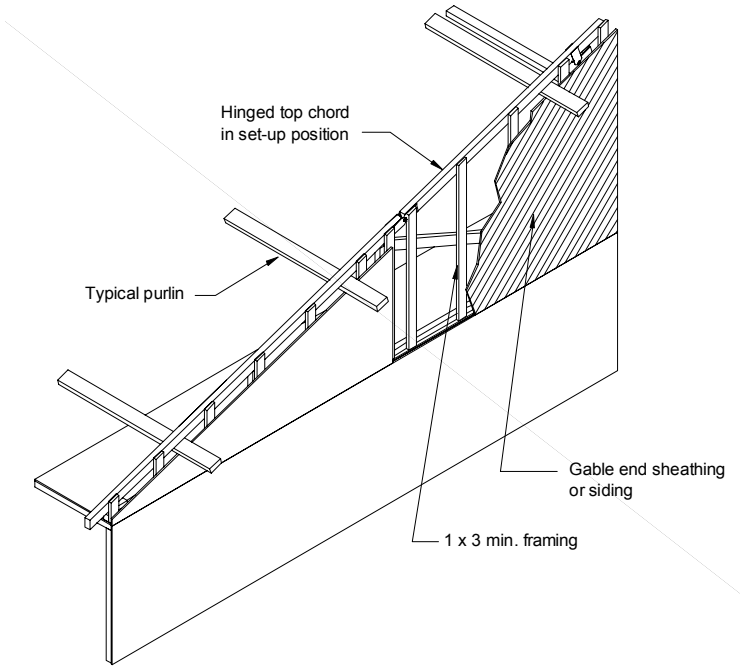

9. **Install vents.** Extend plumbing vents, exhaust fans, appliance vents, and fireplace stacks through the hinged portion of the roof in strict accordance with this manual (**Prepare Appliances and Equipment**, p. 88) and/or supplemental instructions provided by the home manufacturer.

STEP 4. REPAIR OR INSTALL MARRIAGE LINE GASKET

A continuous, non-porous gasket creating a permanent air barrier must be installed on at least one side of the marriage line; along the floor, end walls and ceiling (along top or bottom of ridgebeam) and marriage lines for any tag units. The manufacturer has provided a marriage line gasket either installed on the home or shipped loose. If installed, inspect the gasket and repair any gaps or tears.

If not installed at the factory, install a continuous gasket between the home sections along the floor, end walls, and ceiling (**Figure 31**).

For homes with through-the-rim crossover ducts, see supplemental details for the proper connection at the marriage line.

08-21-2009

Figure 30. *End Wall Completion*

Inspecting vents. Fuel fired heating appliance and fireplace vents that pass through a hinged roof must be completed and inspected at the site prior to energizing the appliance or occupying the home. Failure to comply with this precaution may result in serious injury or death. Venting systems must be installed in conformance with the appliance manufacturer's instructions and any instructions supplied with the home.

Installing marriage line gasket. Special care should be taken to ensure that the marriage line gasket is tight to resist air infiltration and minimize condensation.

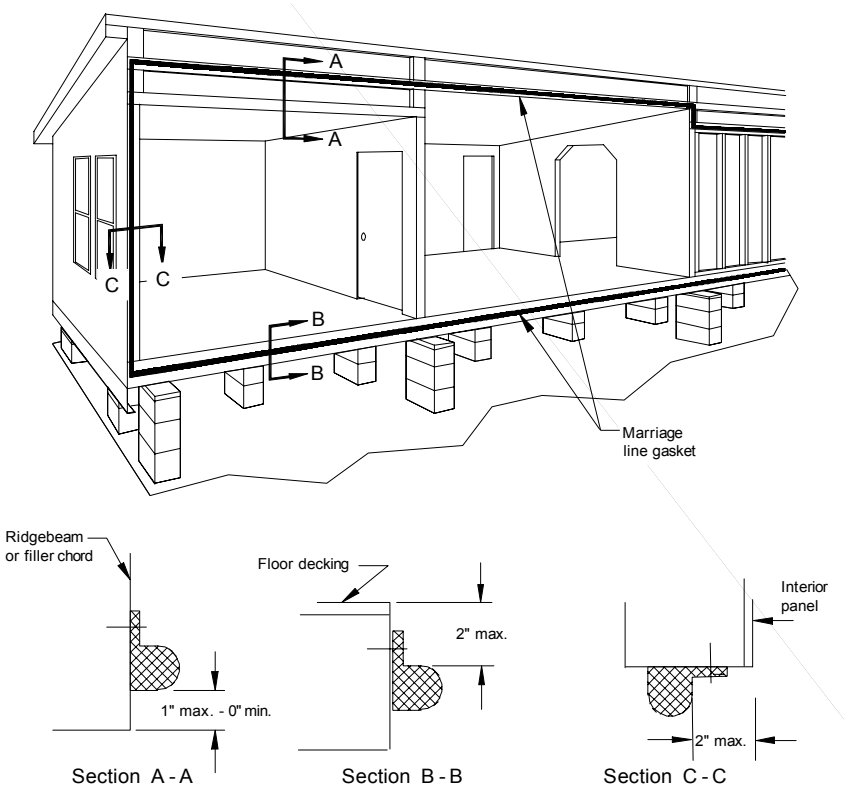

Figure 31. *Marriage Line Gasket Installation*

STEP 5. POSITION ADDITIONAL HOME SECTIONS

Follow this procedure to install additional home sections:

1. **Remove obstructions.** Remove protruding nails and staples or anything else that will keep the home sections from fitting together snugly. If present, cut the temporary ceiling and floor plates at the edges of marriage line openings taking care not to damage ceiling or floor coverings or displace temporary marriage line support posts (these supports and the plates will be removed after the home sections have been structurally connected).
2. **Complete crossovers.** Before moving the two sections together, complete any crossover connections that require access from the open marriage line, including the attic duct connection (if present) and marriage wall interior electrical connections (see **Connect Crossovers**, p.58).
3. **Position section.** Position the section as closely as possible (ideally within six inches) and line up with the previously set section. If using a mechanical positioning system or crane, follow the system manufacturer's instructions or the crane operator's directions.
4. **Construct piers.** With the outside walls of the home aligned, construct the piers for the home section according to the instructions in **Set the Home** (p. 34) before continuing to the steps below.
5. **Level section.** Lower the section onto the outside piers first, inside piers last. Before releasing the mechanical positioning system, check interior doorways and other openings for misalignments that may cause problems during trim-out. The floors should be flush, level, and tight and the roof section should have little, if any, gap at the top of the marriage line. Use at least two come-a-longs to pull the sections snugly together and use the water level or other leveling device to set all piers and shims.
6. **Shim gaps.** Shim any gaps up to one inch between structural elements with dimensional lumber. If any gaps exceed one inch, re-position the home to eliminate such gaps.

Mechanical positioning system. For a pier-set home, a mechanical positioning system (such as a roller system) will make the process easier and safer and be less likely to damage the home.

Sealing gaps. Prior to completion of the exterior close-up, gaps that do not exceed one inch are permitted between structural elements provided that the gaps are closed before completion of close-up, the home sections are in contact with each other, and the marriage gasket provides a proper seal.

STEP 6. CONNECT FLOORS

Make floor structural connections according to one of the methods described below.

Method 1: Install toed fasteners through bottom board or floor decking

Install fasteners at approximately a 45 degree angle (+/- 5 degrees) from horizontal as shown in **Figure 32** using the fastener type, size, and spacing indicated on **Table 17**.

Install fasteners as indicated, making sure to repair any openings in the bottom board with tape specially made for that purpose (may be provided).

TABLE 17. FLOOR CONNECTION FASTENING SPECIFICATIONS

Fastener		Spacing		
Type	Size	Wind Zone I	Wind Zone II	Wind Zone III
Lag screw	3/8" x 6"*	36 in.	20 in.	16 in.

* Increase fastener lengths by 3 inches for double rim joists.

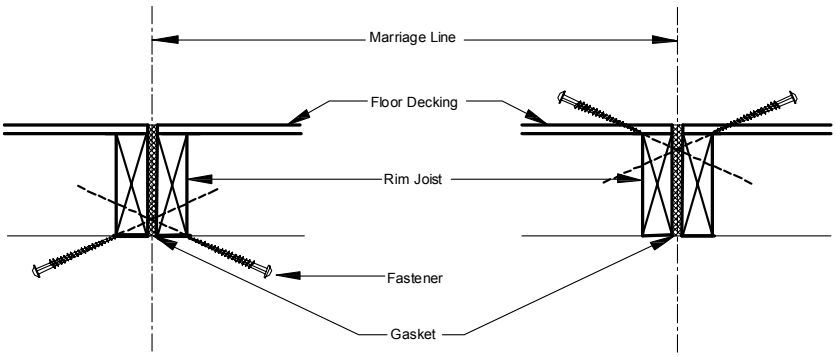

Stagger fasteners on either side of marriage line and offset them by half the spacing distance (**Figure 33**).

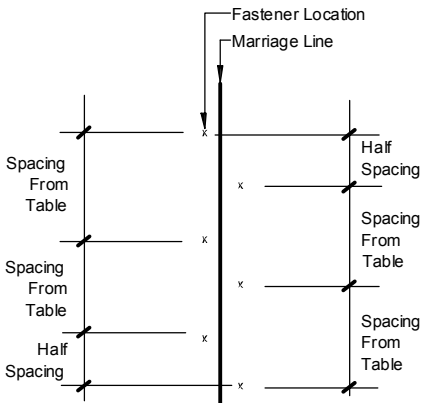

Method 2: Install horizontal fasteners through rim joist

Insert 3/8" x 3" lag screws spaced per **Table 18** horizontally though rim joists and staggered top to bottom as in **Figure 34**. After installation of fasteners, repair tears or holes in the bottom board using tape specially made for that purpose.

TABLE 18. HORIZONTAL RIM JOIST FASTENER SPACING

Wind Zone I	Wind Zone II	Wind Zone III
18 in.	10 in.	8 in.

Patch bottom board. Use adhesive spray, mastic, and/or divergent staples in combination with bottom board tape for a more secure and durable connection.

Figure 32. *Floor connection through bottom board or floor decking*

08-21-2009

Figure 33. *Staggered offset fastening along marriage line*

Lag specification. 3/8" diameter lags used to connect pressure-treated lumber (ie connecting porch rim joists) shall be hot-dipped galvanized. Lags that are ½" or larger diameter are not required to be hot-dipped galvanized.

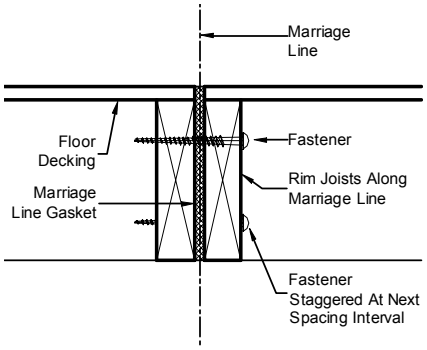

Figure 34. *Horizontal fasteners through rim joists*

STEP 7. CONNECT ROOF

If the marriage line along the roof is not snug, position jacks every 20 feet or less along the outside I-beam and uniformly lift the section until the roof area is tight.

Check to make sure the ceiling joint is flush before installing the connections. If not, use a jack and tee to raise whichever ceiling is low, starting at the front and working to the rear of the home. Fasten the roof along the marriage line using one of the methods below for either double or triple-section homes.

DOUBLE-SECTION HOMES

Make roof structural connections in double-section homes according to the one of the methods described below.

Method 1: Install toed fasteners through roof sheathing

Install the fasteners through the roof deck into the ridge beams at an approximately 45 degree angle (+/- 5 degrees) from horizontal (**Figure 35**) according to the fastener spacing and specifications in **Table 19**. Stagger fasteners on each side of marriage line and offset them by half the spacing distance (**Figure 33)**. Spacing indicated is on-center, both sides of ridge. Make sure fasteners penetrate the ridge beam/rail by a minimum of 1-1/2 inches both sides of ridge. For homes with TJI ridgebeam next to the roof peak, see Method 2 instead. If the TJI ridgebeam is located lower in the attic cavity and filler chords are at the peak, then Method 1 may still be used.

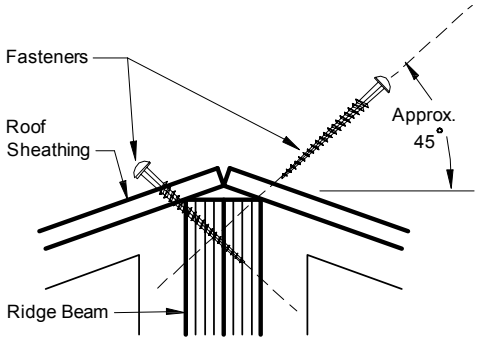

TABLE 19. ROOF CONNECTIONS SPECIFICATIONS

Fastener		Spacing		
Type	Size	Wind Zone I	Wind Zone II	Wind Zone III
Lag screw	3/8" x 6"	36 in.	20 in.	16 in.
Fasteners in roof cap	1" x 1-1/4" x 16 gauge staples	3 in. for 14-wide max. or 2 @ 2-1/2 for 16-wide max.	6 in.	6 in.

Closing the roof gap. Level and fasten the marriage line joint at the floor before jacking to tighten a roof gap. Close up any gaps with shims. DO NOT use roof fasteners to close any gaps. Separation of the ridge beams and trusses may occur.

Ridgebeam type. It is important to use the correct fastening method depending on the ridgebeam type. Use of Method 1 with a TJI ridgebeam can cause structural damage to the beam.

Figure 35. *Toed fasteners through roof sheathing*

08-21-2009

- Select metal caps made of minimum 8" x 32 ga. galvanized steel or 0.019" aluminum.
- Install caps continuously, overlapping by minimum of four inches at splices.
- Fasten caps with galvanized staples on both sides of ridge according to the specifications and spacing in **Table 19**.

Method 2: Install straps over roof sheathing
If the home is built with a TJI ridgebeam at the peak of the roof, straps must be used to secure the roof sections together rather than lag bolts. The straps will already be installed at the factory at the spacing shown in **Table 20** and **Figure 36**. If the straps were not installed or if they are damaged see **Table 20** for specified size and spacing of the straps. The straps need not be galvanized.

For factory-installed straps bend the straps up before the sections are placed together. After sections are in final position, bend the straps back down on top of the roof sheathing and secure the ends of the strap as shown in **Table 20**.

TABLE 20. ROOF MATING LINE STRAPS

Fastener		Number (each end of strap)		
Type	Size	Wind Zone I*	Wind Zone II	Wind Zone III
Straps	1-1/2" wide x 26 gauge	48 in	24 in	16 in
Staples	7/16" (or 1") x 1-1/2" x 16 gauge	6 each	6 each	4 each
Nails	0.082" x 1-1/2"	9 each	9 each	7 each

* Special eave tie-down connections have been installed at the factory that permit most Wind Zone I homes to be installed without the straps and anchors at the marriage line (i.e. "G-straps) that are typically required to resist uplift.

Installing lags. If lags are used to connect roofs, use appropriately sized washers, countersink the fastener heads and fill the countersink holes with putty or caulk to prevent shingles from sinking into the holes over time.

08-21-2009

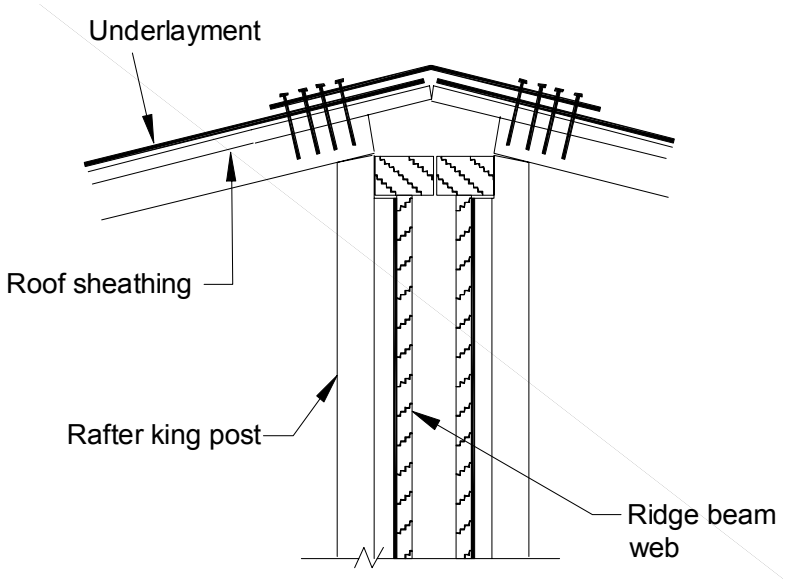

Figure 36. *Roof Strapping for TJI Ridgebeam*

TRIPLE-SECTION HOMES
For triple-section homes where roof lines run parallel to each other on adjacent units (**Figure 38**), follow the instructions in the appropriate method below to complete the connections at the roof.

Method 1: Install fasteners through pre-installed sheathing
For homes where sheathing is in place on both sides of the marriage line (**Figure 37**) install fasteners from the low side of the roof on an angle so as to penetrate roof beams on both sides of marriage line, using the fastener specifications and spacing indicated on **Table 21**. For homes with TJI ridgebeam next to the roof sheathing, see Method 2 instead. If the TJI ridgebeam is located lower in the attic cavity and filler chords are at the sheathing, then Method 1 may still be used.

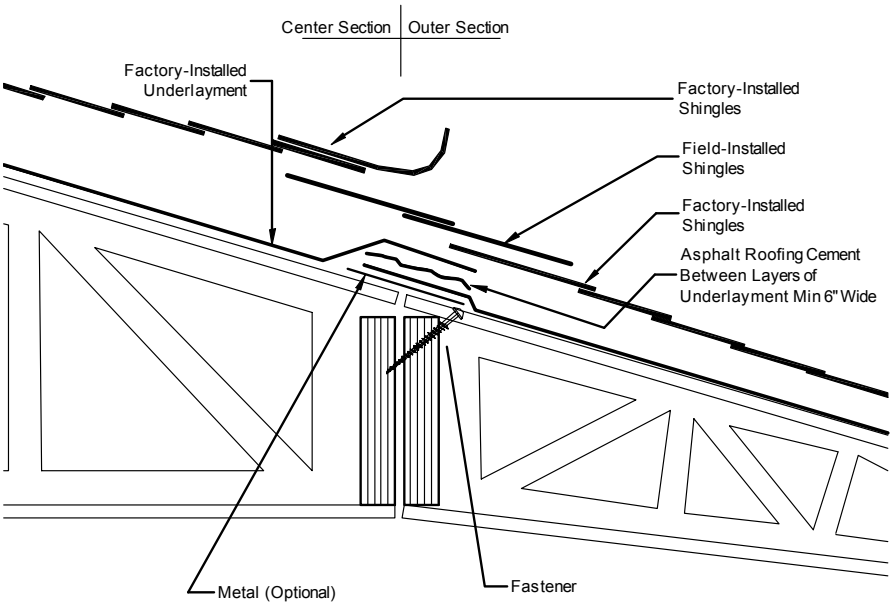

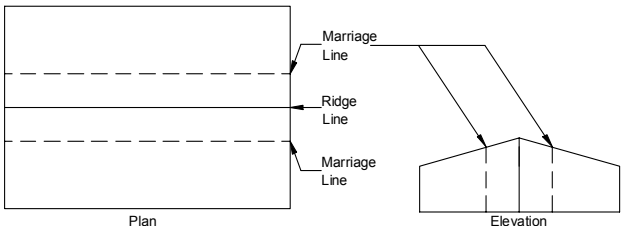

TABLE 21. ROOF CONNECTION SPECIFICATIONS

Fastener		Spacing		
Type	Size	Wind Zone I	Wind Zone II	Wind Zone III
Lag screw	3/8” x 6”	12 in.	6 in.	6 in.
Fasteners in roof cap	1” x 1-1/4” x 16 gauge staples	6 in.	6 in.	6 in.

Install a roof cap as follows:

- Select metal caps made of minimum 8" x 32 ga galvanized steel or 0.019” aluminum.
- Install caps continuously, overlapping by minimum of four inches at splices.
- Fasten caps with galvanized staples both sides of ridge according to the specification and spacing in **Table 21.**

08-21-2009

Figure 37.*Triple-section roof connection Method 1*

Figure 38.*Triple-section home*

Method 2: Install straps over roof sheathing
If home is built with a TJI ridgebeam, roof straps must be used to secure the roof sections together at the marriage line rather than lag bolts. The straps will already be installed at the factory at the spacing shown in **Table 22** and **Figure 39**. If the straps were not installed or if they are damaged, see **Table 22** for specified size and spacing of the straps. The straps need not be galvanized.

For factory-installed straps, bend the straps up before the sections area placed together. After sections are in final position, bend the straps back down on top of the roof sheathing and secure the ends of the strap as shown in **Table 22**.

TABLE 22. ROOF MATING LINE STRAPS

Fastener		Number (each end of strap)		
Type	Size	Wind Zone I*	Wind Zone II	Wind Zone III
Straps	1-1/2" wide x 26 gauge	48 in	24 in	16 in
Staples	7/16" (or 1") x 1-1/2" x 16 gauge	6 each	6 each	4 each
Nails	0.082" x 1-1/2"	9 each	9 each	7 each

Complete the marriage line by installing the roof cap in a similar method to that shown for the Double-Section homes in **Table 19**.

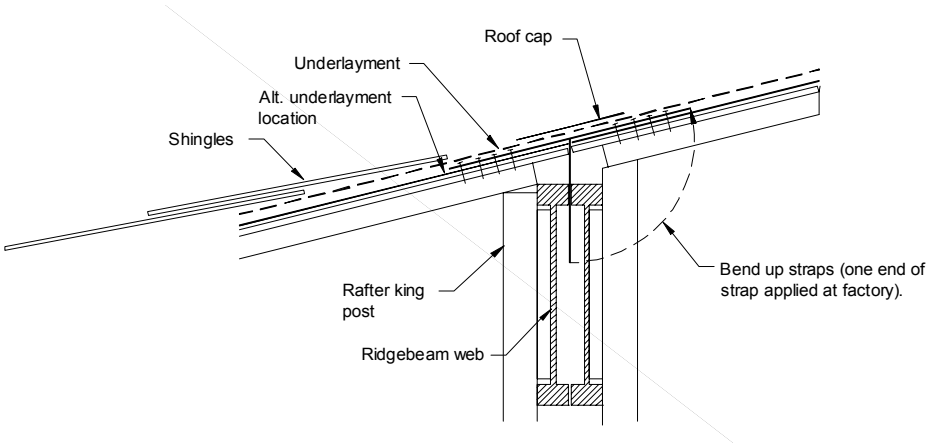

Figure 39. *Triple-section roof connection (method 2)*

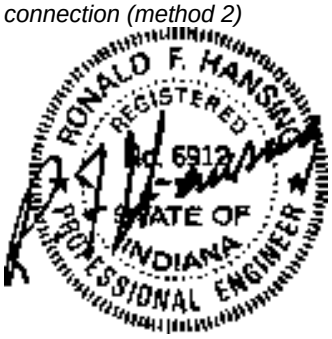

08-21-2009

STEP 8. CONNECT WALLS

Once the home is secured along the marriage line floor and roof, secure end walls, interior doorways, and marriage line partitions according to the appropriate method described below:

END WALLS
Install toed fasteners through sheathing
Toe fasteners through sheathing from the exterior at an approximately 45 degree angle (+/- 5 degrees) (**Figure 40**) according to the fastener specifications and spacing requirements in **Table 23**.

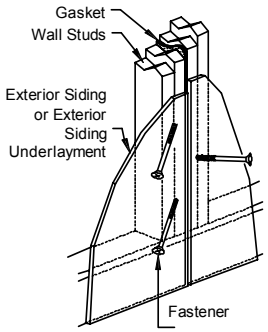

Figure 40. *End wall connection toed through sheathing*

TABLE 23. END WALL FASTENER SPECIFICATIONS

Fastener type	Size	Spacing
Lag screw with washer	5/16” x 5”	24 in. o.c.
Wood screw	#8 x 4”	24 in. o.c.
Nail	16d	8 in. o.c.

MARRIAGE WALL COLUMNS, OPENINGS AND INTERIOR PARTITIONS

Make connections inside the home along the marriage walls (**Figure 41** and **Figure 42**) by installing fasteners according to the specifications and spacing requirements in **Table 24**. Toe screw 2 x 4 or 2 x 6 studs; through-screw 2 x 3 studs.

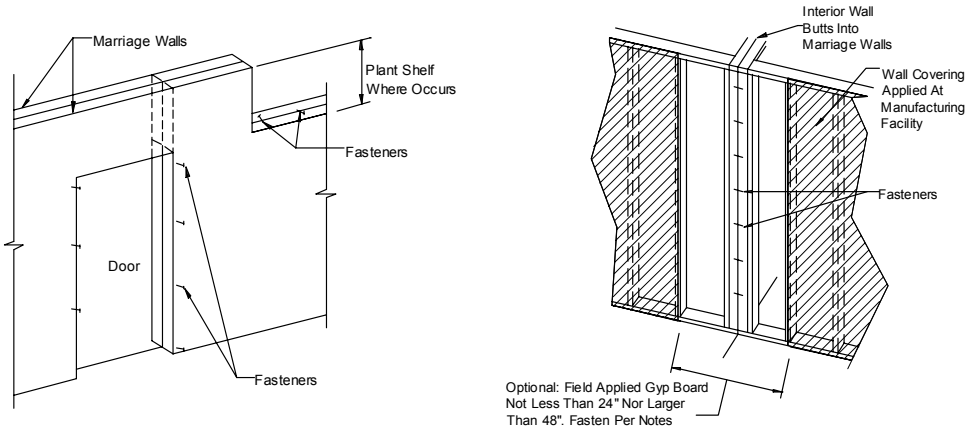

Figure 41. *Marriage wall connections*

08-21-2009

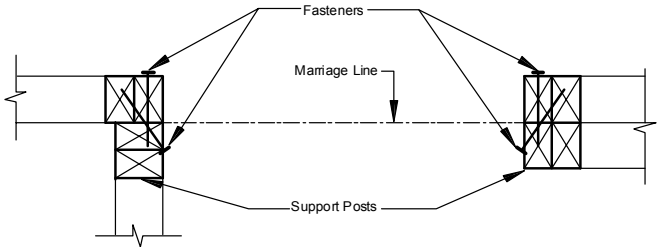

Figure 42. *Marriage line column connections*

TABLE 24. MARRIAGE WALL CONNECTION SPECIFICATIONS

Fastener type	Size	Spacing
Wood screw	#8 x 4”	16 in. o.c.

Do additional sections (non tag) remain to be positioned?

- ► **YES,** go to **STEP 1. INSTALL MARRIAGE LINE GROUND ANCHORS,** (p. 40)
- ► **NO,** continue below.

Is there a tag unit?

- ► **YES,** go to **STEP 9. ATTACH TAG UNITS** (p. 51)
- ► **NO,** continue below.

Is there a hinged roof?

- ► **YES,** go to **STEP 3. COMPLETE HINGED ROOF,** (p. 40)
- ► **NO,** go to **STEP 9. ATTACH TAG UNITS,** (p. 51)

08-21-2009

STEP 9. ATTACH TAG UNITS

After the main unit has been set on its foundation, install all tag units according to the following procedure:

1. **Position and block the tag.** Position the tag unit as close to the main unit as possible at its intended location. Use a hitch jack to obtain approximate leveling and install pier supports according to **Set the Home**, **STEP 2. POSITION HOME SECTION** (p. 34). Determine whether the tag and main unit floors are designed to line up flush or are offset by a step and adjust the tag pier heights accordingly.
2. **Level the unit.** Using a water level (p.39), verify that the piers are level. The elevation of all points along the lower flange of the I-beam should be within 1/4 inch of level between any adjacent piers or any eight foot distance, whichever is less.
3. **Shim gaps.** Shim any gaps up to one inch between structural elements of the tag and main unit with dimensional lumber. If any gaps exceed one inch, reposition the tag to eliminate such gaps. Max. 1/4" lauan shims may be used to align the top chords of the main unit dormer and the tag.
4. **Connect floors.** After confirming that the floor of the tag unit is level with the main unit floor, connect the floors together as described in **STEP 6. CONNECT FLOORS** (p. 45).
5. **Connect walls.** Secure the tag unit walls to the main unit sidewall using #8 x 4" screws at 12 inches o.c. (see **Figure 43**). The sheathing shown in the detail may not be included by the manufacturer. If included, the sheathing over the last stud bay was tacked in place at the factory for easy removal at the site. Once the wall connections are complete, re-install the sheathing and complete the siding installation.

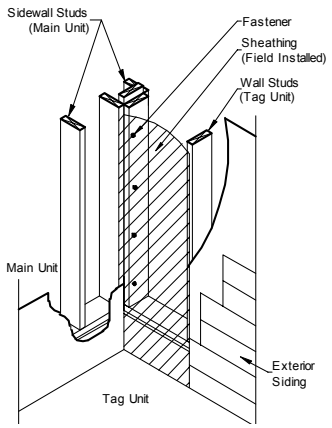

Figure 43. *Tag unit wall connection*

6. **Connect roofs.** For flush roof conditions, connect the tag unit rafter top chord to the main unit dormer face frame using #8 x 3-1/2" screws at 24" o.c. as shown in **Figure 44**. Roof connections with an offset do not require screws.

Piers under tag units. Some tag units have special piering needs due to the roof and/or floor construction. These will be detailed in supplemental piering plans supplied with the home. Note that tag unit end walls are typically load bearing rather than side walls.

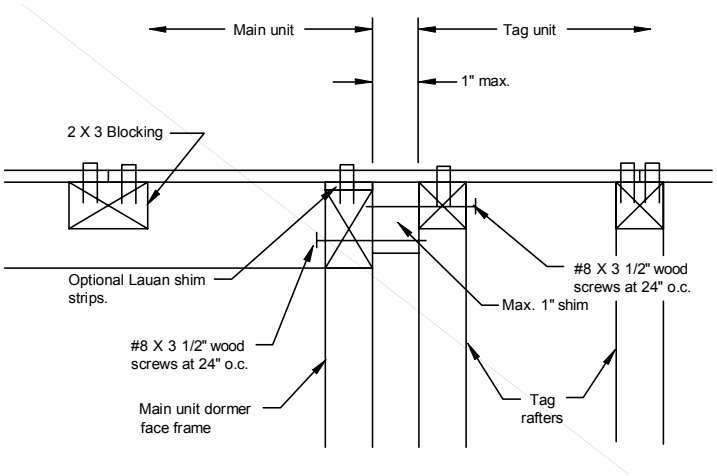

Figure 44. *Tag Unit Roof Connections*

08-21-2009

STEP 10. REMOVE TEMPORARY ITEMS

Once the home is properly supported and the marriage line connections are completed, remove the temporary ridge beam supports and wall/ceiling plates used to brace the ridge beam during shipment. Take care not to damage the ceiling.

Remove and store or properly dispose of or recycle the hitch, axles, and wheels. These items are the property of the homeowner unless other contractual arrangements have been made.

Is the home supported on a load-bearing perimeter wall?

- ► **YES,** go to **STEP 11. FASTEN HOME TO FOUNDATION,** (p. 52)
- ► **NO,** go to **Complete Roof and Exterior Walls** (p. 53).

STEP 11. FASTEN HOME TO FOUNDATION

Fasten the home to the foundation (typically to the sill plate) according to the fastening schedule provided by the manufacturer.

Is the home supported on a basement foundation?

- ► **YES,** go to **STEP 12. BACKFILL AND GRADE,** (p. 52)
- ► **NO,** go to **Complete Roof and Exterior Walls** (p. 53).

When to backfill. Backfill against basement walls only after the home is connected to the foundation or the basement walls may deflect inward or collapse.

Cutting the chassis. Do not cut, notch, bend, or alter in any manner beams, cross-members, and other parts of the steel chassis.

STEP 12. BACKFILL AND GRADE

Backfill against the foundation wall to the height of the waterproofing, taking care to not damage the drainage system.

Grade the site as described in **Prepare the Site**, **STEP 3. CLEAR AND GRADE THE SITE** (p.15).

STEP 13. BUILD STAIRS

Construct the basement stairs in compliance with the local building code. Take care that adequate headroom is maintained under beams and that there is sufficient landing space at the bottom of the stairs.

► go to **Complete Roof and Exterior Walls** (p. 53).

Complete Roof and Exterior Walls

This chapter covers closing up and weatherproofing the home by completing the roofing and siding.

Follow the Steps below:

- **STEP 1. COMPLETE ROOF** (p. 53)
- **STEP 2. COMPLETE TAG UNIT ROOF** (p. 55)
- **STEP 3. COMPLETE SIDE WALLS** (p. 57)

STEP 1. COMPLETE ROOF

RIDGE CLOSEUP

For multi-section homes, the first step in completing the exterior is sealing the roof along the ridge line (**Figure 45**). For homes with asphalt shingles, follow the procedure below. For homes with metal or other roofing materials, follow the instructions that come with the roofing materials or provided as a supplement to this manual.

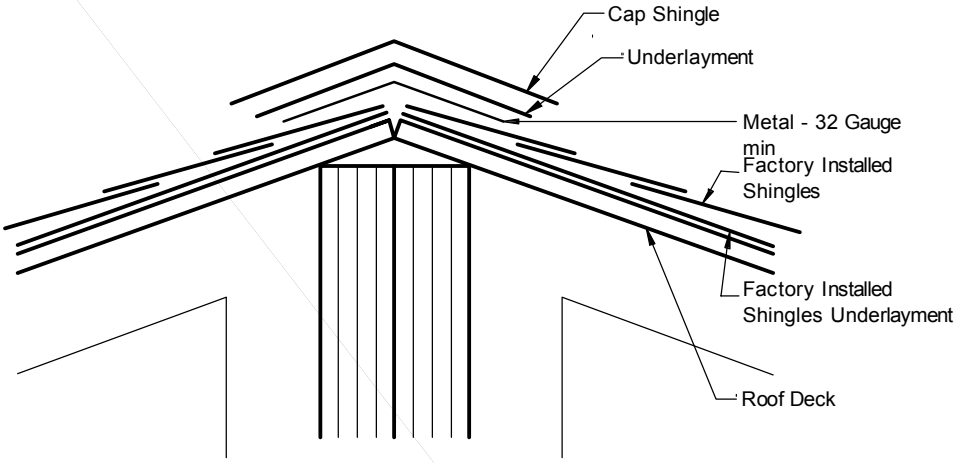

Figure 45. *Shingle installation at ridge*

Weatherproofing. It is vitally important to close up the home quickly to protect the interior from damage due to inclement weather.

1. **Install underlayment** (when sheathing at the ridge is installed on site). Make sure the roof sheathing is already installed (see **Complete Multi-Section Set, STEP 7. CONNECT ROOF**, p. 46). Install 15# felt or equivalent continuously along the length of the ridge, covering all exposed sheathing and overlapping sheathing joints by at least five inches on each side. Fasten using 1" x 1" x 16 ga galvanized staples. For Wind Zones II and III, also apply a six inch wide strip of roofing cement along each side of ridge under the underlayment.
2. **Install shingles.** If shingles have been left off at the ridge line for site installation, install them now using 1" x 1" x 16 ga galvanized staples or 12ga 1-1/4" long, 3/8" diameter head roof nails. For Wind Zone I, fasten at 5/8 inch above each tab cutout slot and one at each end of the shingle one inch in from the edge (four fasteners for a three-tab shingle) (**Figure 46**). For Wind Zones II and III, use two fasteners 5/8 inch above and on either side of the tab slots and one at each end of the shingle one inch in from the edge (six fasteners for a three-tab shingle). Do not fasten through the shingle tar line.

Removing shipping protection. Remove shipping protection and hold-down strapping from roof. Remove all staples or nails used to secure the protection. Fill holes in the lower shingle by lifting the upper shingle tab then fill hole with appropriate tar or cement. There is no need to fill holes in the top shingle as long as any holes in the lower shingles are filled.

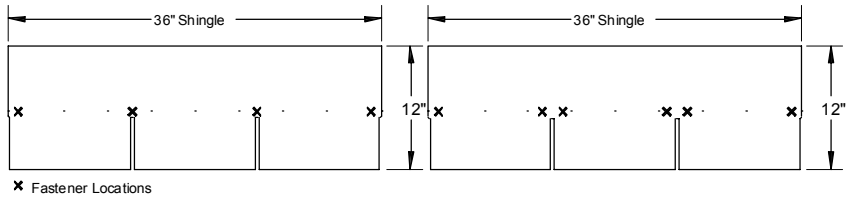

Figure 46. *Shingle fastener locations for Wind Zone I (left) and Wind Zones II and III (right).*

3. **Install underlayment.** Install 15# felt or equivalent underlayment that is at least 10 inches wide continuously along the ridge. Fasten with 1” x 1” x 16 ga galvanized staples. For Wind Zones II and III, also apply a six inch wide strip of roofing cement on both sides of the ridge under the underlayment.
4. **Install shingle cap.** Starting at the opposite end of the home from the prevailing wind, install ridge cap shingles provided by the manufacturer or use 12" x 12" shingles (36” shingles cut into three equal pieces) (**Figure 47**). Install using 1” x 1” x 16 ga galvanized staples or 12 ga 1-1/4” long, 3/8” diameter head roofing nails spaced 5-5/8 inches from bottom edge and 1/2 inch to 1-1/2 inches in from both edges. Cover the exposed fasteners with tar or cement.

Installing a ridge vent. If a ridge vent is to be installed, follow the ridge vent manufacturer’s instructions provided with the material or as an addendum to this manual in lieu of underlayment over ridge line and shingle cap.

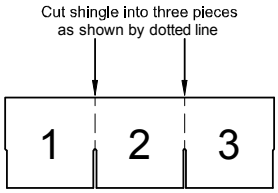

Figure 47. *Shingle cut into thirds*

HINGE ROOF CLOSE-UP

For homes with hinged roofs, complete roofing underlayment and shingles along the hinge line (**Figure 48**) as follows:

1. **Install underlayment.** Attach the underlayment to the roof deck with a minimum of six-inch wide strip of cement. If necessary, trim the underlayment to allow the lowest shingle above the hinge of the roof to seal to the topmost shingle on the lower portion of the roof.

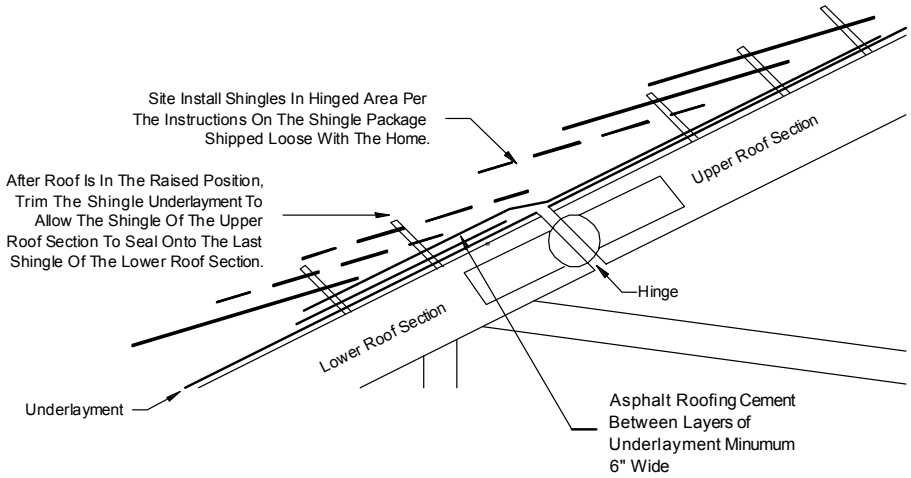

Figure 48. *Shingle installation at hinge line*

2. **Install shingles.** Install missing shingles according to the shingle manufacturer’s instructions.

Installing metal flashing. Install optional metal flashing over the roof decking before applying roofing cement. Fold back the underlayment and fasten 30 ga x 4” wide minimum galvanized metal with roofing nails or 16 ga x 1” crown x 1-1/4” staples. Space fasteners four inches o.c. or less near the edge of the metal. Overlap the metal by at least two inches at joints.

COMPLETE TRIPLE-SECTION ROOFS

Complete roofing along triple-section home marriage lines according to one of the following methods based on the construction of the home.

Method 1: Manufacturer-installed sheathing

1. **Fill Gaps.** The gap in the sheathing at the hinge may need to be filled. A gap of 1/4 inch or less needs not be filled. Gaps up to 1/2 inch shall be filled by 2” x 32 gauge metal flashing over the length of the gap. Gaps up to 1-1/2 inch shall be filled with 8” x 30 gauge metal flashing over the gap. Fasten the flashing to the sheathing using 1” x 1” x 16 gauge or 7/16” x 1” x 16 gauge staples at 4 inch along each edge of the flashing.
2. **Install underlayment.** Fold down the underlayment of the outer section roof and apply a minimum six-inch wide strip of roofing cement to the sheathing.

Lay the underlayment of the center section on top of the cement (see Best Practice tip for optional metal flashing). Fold down the center section roof underlayment on this cement.

3. **Install shingles.** Install missing row(s) of shingles, securing them per the shingle manufacturer's installation instructions (refer to the shingle wrapper).

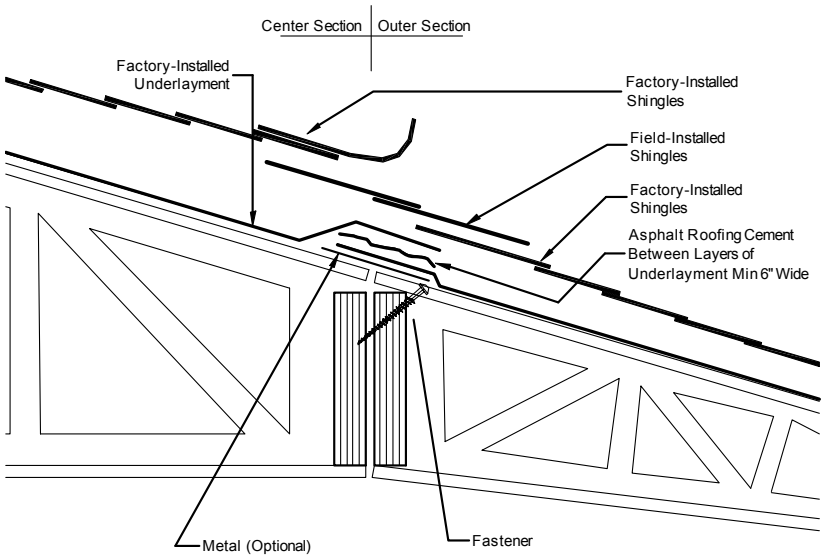

Figure 49. *Triple-section roof connection Method 1*

Method 2: Field-installed sheathing

1. **Install underlayment.** Fold down the underlayment of the outer section roof and fold up the underlayment on the center section roof. Apply to the lower roof underlayment a minimum six-inch wide strip of roofing cement centered on the sheathing joint. Cover with the shipped loose underlayment. Apply another minimum six-inch wide strip of roofing cement to the ship loose underlayment centered on the upper roof sheathing joint.
2. **Install shingles.** Install missing row(s) of shingles per the shingle manufacturer's installation instructions (refer to the shingle wrapper).

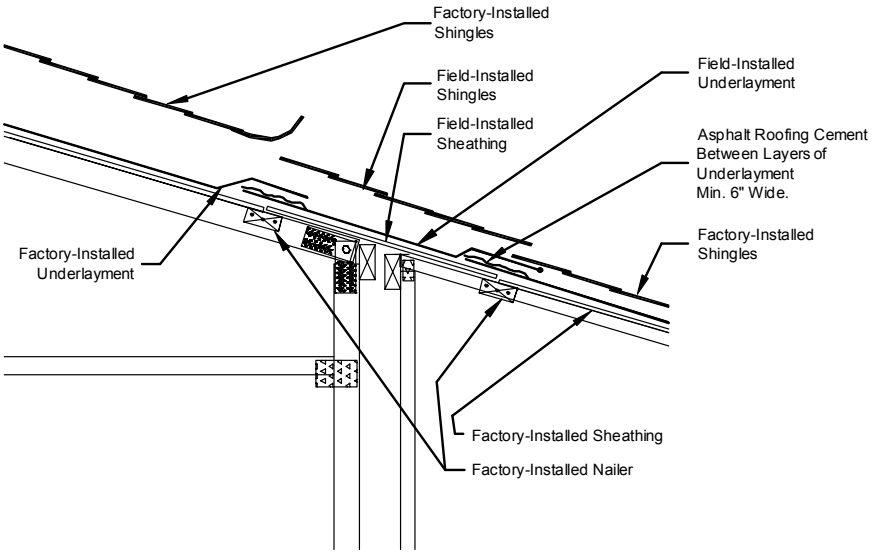

Figure 50. *Triple-section roof connection Method 2*

STEP 2. COMPLETE TAG UNIT ROOF

If the home has a tag unit, complete roofing for this unit now. The process for completing the roof is different for flush and offset roofs. Follow the instructions in the appropriate

section below.

FLUSH ROOFS

For flush roofs, complete roofing along the marriage line and at the valley line as follows (see **Figure 51**):

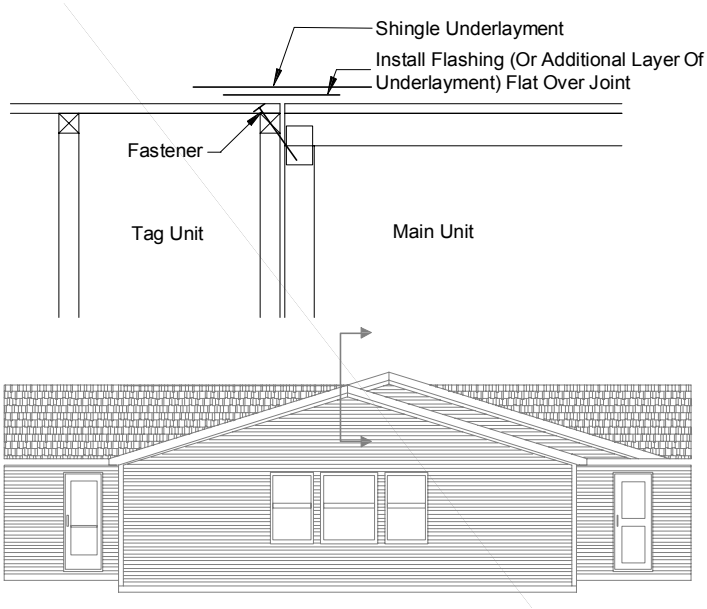

Figure 51. *Tag unit flush roof connection*

Marriage line

Method 1: Install metal flashing (minimum 30 ga x minimum 6" wide) over the joint between the main roof dormer and tag unit roof. Secure the flashing to the roof decks on both dormer and tag unit roofs with roofing nails or 16 ga staples with a one inch crown and long enough to fully penetrate the roof decks. Space fasteners maximum two inches o.c. near the edge of the flashing. Overlap seams in the metal by at least two inches. After flashing is complete, install shingles per shingle manufacturer instructions and ridge cap/vent according to **STEP 1. COMPLETE ROOF** (p. 53).

Method 2: Install two layers of roofing underlayment or equivalent over the joint between the main roof dormer and tag unit roof lapping the factory installed underlayment a minimum of six inches on each side and fully cemented at the laps. Install shingles per shingle manufacturer instructions and ridge cap/vent according to **STEP 1. COMPLETE ROOF** (p. 53).

Valley line

Along the bottom of the valley, shingles and one or more layers of roll roofing may need to be installed. If fastened to the roof at the factory, unroll the roofing, overlap the tag roof and trim the roofing to the roof edge. If shipped loose, install the roll roofing at the valley, lapping it under the factory installed roll roofing a minimum of 12 inches and fully cement the roofing at the lap. Complete shingles at the valley either by interweaving them or by trimming back approximately four inches from the valley line and fully cementing the exposed shingle edges.

OFFSET ROOFS

If there is a gap between the main unit dormer overhang and the tag unit roof, bend up the inside corner trim at the dormer overhang and main unit sidewall, fold up the factory installed flashing on the tag unit roof, fold the inside corner trim back down, and secure into dormer wall with metal screws (**Figure 52**).

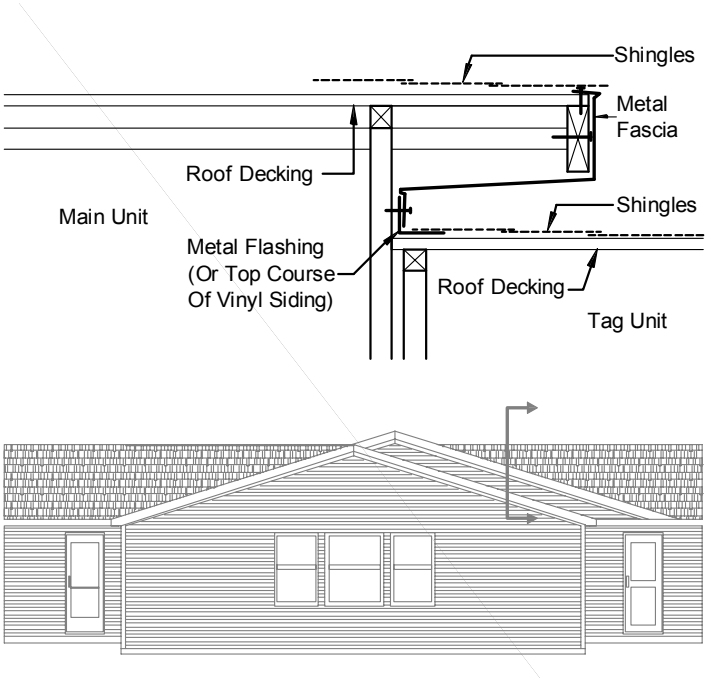

Figure 52. *Tag unit offset roof connection*

STEP 3. COMPLETE SIDE WALLS

Siding necessary to complete the exterior has been provided with the home. Follow the siding manufacturer's instructions (found on or with the packaging or as an addendum to this manual) and to complete the exterior siding as follows:

1. **Remove shipping protection.** Remove temporary shipping protection from walls.
2. **Complete crossovers.** Complete any crossover connections in the walls, including: electrical, stereo speaker, doorbell, telephone, and intercom wires.
3. **Install siding.** Fasten siding only at stud locations, avoiding electrical wires that are present in the walls.
4. **Install close-up of strips.** If siding has been installed on the end walls at the factory, fasten close-up strips securely along both edges and seal the edges with a waterproof sealant.
5. **Install trim.** Install any matching trim required to complete the installation.
6. **Seal penetrations.** With a waterproof sealant, seal any penetrations in the siding that may have been caused by temporary shipping protection.

Covering the HUD label. Do not cover the HUD label on the exterior of the home.

Removing shipping protection. Remove temporary shipping protection from walls before installing siding or serious moisture damage may result.

► go to **Connect Crossovers** (p. 58).

Connect Crossovers

This chapter covers crossover connections between units of multi-section homes, including ducts and electrical, water, waste, gas, telephone, and cable TV connections.

Follow the Steps below:

- **STEP 1. CONNECT DUCTS** (p. 58)
- **STEP 2. CONNECT ELECTRICAL CROSSOVERS** (p. 60)
- **STEP 3. INSTALL ELECTRICAL BONDING** (p. 61)
- **STEP 4. CONNECT WATER LINES** (p. 62)
- **STEP 5. CONNECT DRAIN, WASTE, AND VENT LINES** (p. 62)
- **STEP 6. CONNECT GAS LINES** (p. 64)
- **STEP 7. CONNECT TELEPHONE AND CABLE TV WIRING** (p. 64)

STEP 1. CONNECT DUCTS

There are three main types of duct crossover connections. Based on the location of the duct, follow the installation steps on the page indicated below:

- Under the floor (p. 58).
- In the roof cavity (See supplemental details).
- In floor, through-the-rim joist (See supplemental details).

To prevent air leakage, seal all ductwork connections, including duct collars using one or more of the following materials:

- Galvanized metal straps in combination with galvanized sheet metal screws.
- For rigid air ducts and connectors, tape and mastics listed to UL 181A.
- For flexible air ducts and connectors, tape and mastics listed to UL 181B.

UNDER FLOOR FLEXIBLE CROSSOVER DUCT

When heating or cooling equipment is installed in the home, the flexible crossover duct is provided by the manufacturer. In all cases the crossover duct must be listed for exterior use.

There are four common configurations of under floor crossover ducts depending on the number of home sections and the furnace/air handler location. See **Table 25** to locate the appropriate figure.

TABLE 25. UNDER FLOOR DUCT CONFIGURATIONS

Furnace location	Two home sections	Three home sections
Furnace over trunk duct	See Figure 53	See Figure 55
Furnace offset from trunk duct	See Figure 54	See Figure 56

Qualified personnel. Use only qualified personnel to make crossover connections. Consult the LAHJ for licensing or any additional crossover connection requirements.

Access for service. Whenever possible maintain access to connection areas for future maintenance.

Make tight connections. Permanent, durable, and tight crossover duct connections are critical to the proper performance of the home. Leaky ducts can result in severe moisture problems in the home, discomfort from rooms not receiving the proper amount of conditioned air, and high utility bills from wasted heating and/or cooling energy.

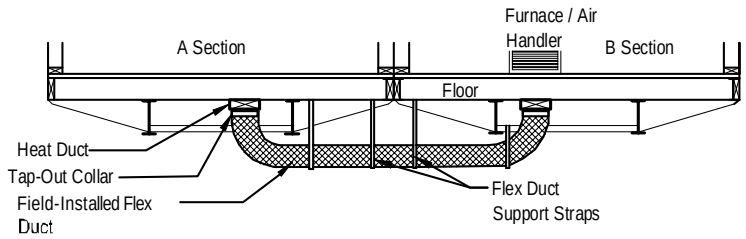

Figure 53. *Furnace over trunk duct, two home sections*

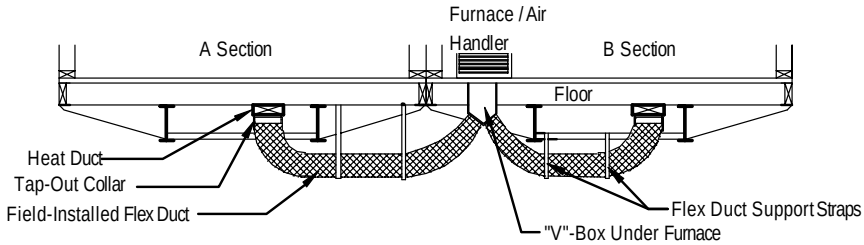

Figure 54. *Furnace offset from trunk duct, two home sections*

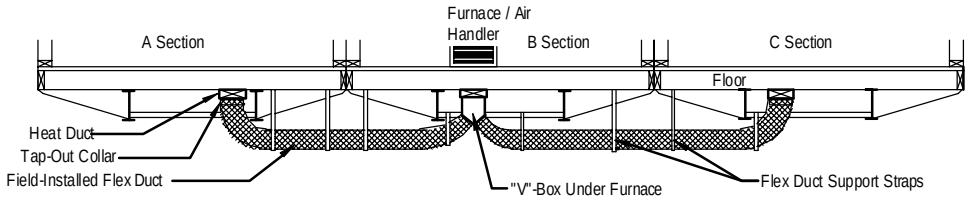

Figure 55. *Furnace over trunk duct, three home sections*

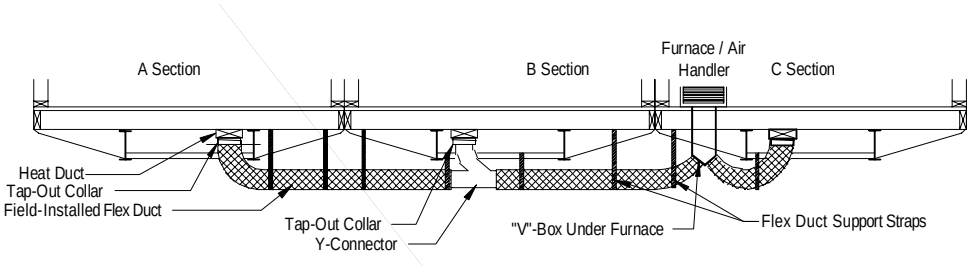

Figure 56. *Furnace offset from trunk duct, three home sections*

For under floor flexible crossover ducts follow the steps below:

1. **Locate collars.** Locate the metal crossover collars (or V-box) connected to the main trunk duct (or furnace) under the home and remove temporary shipping protection.
2. **Install inner duct.** Slide the crossover duct inner liner over the crossover collar/V-box as far as it will go. Temporarily fasten the inner liner in place with duct tape. Install a large nylon zip-tie over the inner liner just above the "ridge" around the crossover collar/V-box. Apply mastic completely over inner liner and collar/V-box (alternately, the mastic may be applied to the collar/V-box prior to sliding the duct inner liner over it).
3. **Connect duct insulation.** Bring the duct insulation up over the zip-tie and above the home's bottom board into the floor cavity. Temporarily duct tape it against the base of the trunk duct/V-box.
4. **Pull duct wrap.** Pull the crossover duct outer wrap over the top of the insulation and temporarily secure it to the trunk duct/V-box with duct tape.
5. **Install zip-tie.** Feel for the nylon zip-tie that was installed over the inner liner. Place another nylon zip-tie just under the first one to permanently secure the crossover duct insulation and outer wrap.
6. **Trim duct.** Trim the crossover duct to length such that the installed duct will be straight with no kinks or unnecessary bends.
7. **Connect other end.** Follow the same procedure (steps 1 through 5) to connect the opposite end of the crossover duct and any other crossover ducts.
8. **Seal joints.** Seal the joints between the bottom board and the crossover duct with foam or mastic.

Securing the crossover. Between Step 5 and Step 6, drill three or more 1/16 inch holes an equal distance around and just below the bottom edge of the nylon zip-tie. Install #12 pan head screws in these holes, through the flexible duct and into the metal crossover collar/V-box. The screw heads should be against the zip-tie.

Cover exposed metal. Completely cover all exposed metal connectors with insulation. Apply sealants and tapes only to sur-

9. **Support duct.** Support the crossover duct(s) above the ground using nylon or galvanized metal straps and saddles spaced every 48 inches o.c. or less. Choose straps at least 1/2 inch wider than the spacing of the metal spirals encasing the crossover duct. Install the straps so they cannot slip between spirals. Secure metal straps with galvanized screws.

STEP 2. CONNECT ELECTRICAL CROSSOVERS

Multi-section homes may have one or more electrical crossovers located in the wall(s) and/or floor(s) along the marriage line(s).

JOINING WIRES

Two types of connections may be present at these locations—snap connectors and junction boxes. Identify matching circuits if multiple circuits exist at a single crossover location. These will be coded for identification. Connect snap connectors according to the connector manufacturer's installation instructions, including fastener requirements.

Connect wires in junction boxes as follows (**Figure 57**):

Pull wires. Pull circuit wires into the junction box, sliding them through a romex connector and secure snugly. (**Figure 57**) Do not over-tighten.

1. **Strip wires.** Remove the outer jacket that holds the circuit wires together providing a minimum of four inches of free wire in the box.
2. **Connect wires.** Connect wires together matching like colors, using appropriately sized wire nuts. Use the ground wire to ground the junction box and/or cover plate(s), if metal. Junction boxes may contain single or multiple 15 or 20-amp circuits, or a single 240-volt appliance circuit.
3. **Replace cover.** Reposition the junction box cover and secure using machine (not sheet metal) screws.

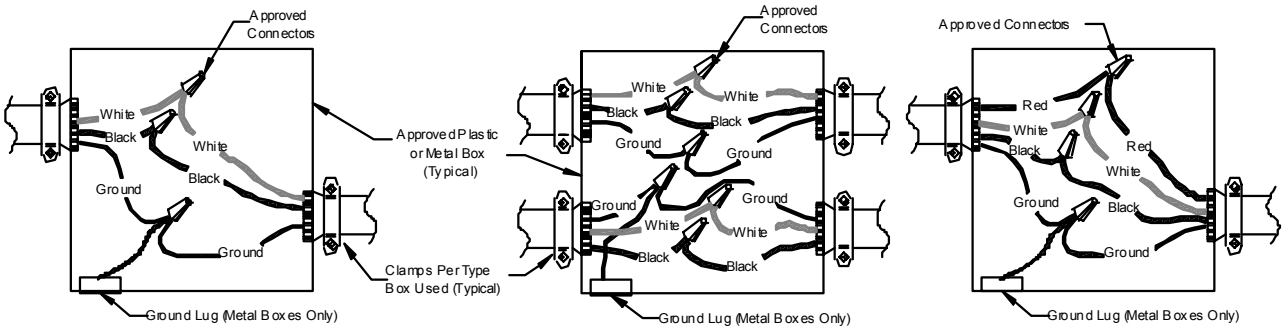

Single 15 or 20 AMP Circuit

Double 15 or 20 AMP Circuits

240V Appliance Circuit

FLOOR CROSSOVER

When making electrical connection(s) in the floor, use the wiring method described below:

1. **Access wires.** Find the crossover location(s) and remove the access panel(s) if attached. If access panel openings are not provided, cut through bottom board to expose the wiring (**Figure 58**).
2. **Route wires.** Pass the wires through predrilled holes or notches in the rim joist or if there is a single bumped-out access panel as in **Figure 59**, then under the rim joists. If holes or notches have not been provided and there is no bumped-out access panel, drill maximum one-inch diameter hole(s) half-way

faces that are dry and free of dust, dirt, and grease.

Avoid ground contact. Installed crossover ducts must not be in contact with the ground.

Unobstructed airflow. Excess length, kinks and bends in the crossover duct will restrict airflow and degrade the home's HVAC system performance.

Use qualified electricians. All electrical work must be performed by a qualified electrician and comply with the 2005 NEC.

Disconnect power. Turn off power to the home before making connections.

Proper use of GFCI circuits. Ensure Ground Fault Circuit Interrupted (GFCI) circuits are connected to the proper GFCI protected circuits from the power supply.

Figure 57. *Types of junction box wiring connections*

Using snap connectors. Do not use oversized nails or drive nail heads into snap connectors. Some connectors are designed for one-time use only – a new connector must be used if they become separated.

up the rim joists on each home section, making sure the holes align and feed the wire through the hole.

3. **Connect wires.** Connect wires via a junction box or snap-connector(s) as described above.
4. **Secure wires.** Secure wires with staples to adjacent joists or studs within eight inches of junction box or snap-connector(s).
5. **Install smash plates.** For notched perimeter joists, install steel wire protectors (smash plates).
6. **Seal bottom board.** Replace insulation and re-install access panels and/or seal the bottom board with tape specially made for that purpose (may be provided). The access panel(s) may be temporarily installed near the crossover location or shipped loose with the home.

Protect cables. Cover all cables with conduit or other suitable weather-resistant and protective material.

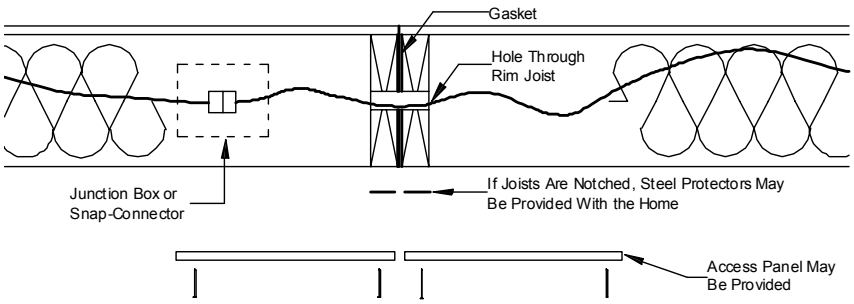

Figure 58. *Electrical crossover floor wires with flush access panels*

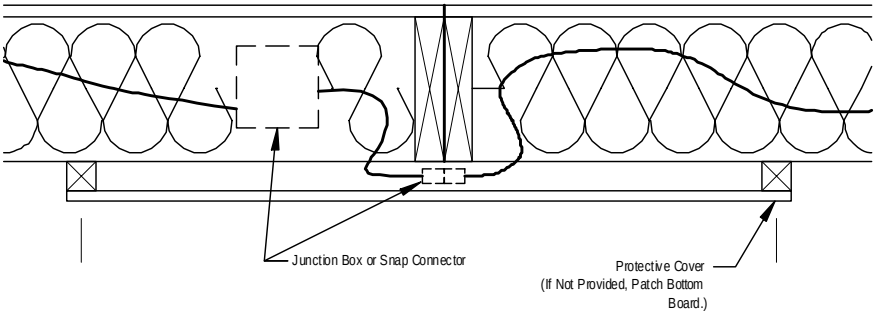

Figure 59. *Floor electrical crossover wires with bumped-out access panel*

STEP 3. INSTALL ELECTRICAL BONDING

To ensure all metal parts are effectively grounded, electrically bond all chasses together as follows (**Figure 60**):

1. **Find lugs.** Locate solderless ground lugs on the front or rear frame outriggers or headers.
2. **Attach wire.** Uncoil the bonding wire (#8 minimum bare copper wire) from one side of the home and connect it to the lug provided on the opposing side. Tighten the set screw firmly on the wire and repeat for any additional home sections.

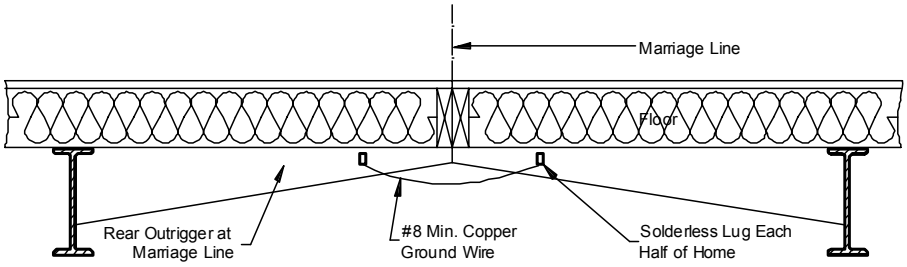

Figure 60. *Electrical bonding of multi-section homes*

STEP 4. CONNECT WATER LINES

Connect water lines inside the floor through access panels or below the bottom board as follows:

WATER LINES ACCESSED THROUGH PANELS

1. **Remove panels.** Remove access panels from each home section.
2. **Remove caps.** Remove shipping caps from ends of water lines.
3. **Pull lines.** Pull water lines through holes in rim joist. If holes are not provided, drill round holes in the center of the rim joist, with a maximum diameter of one third the rim joist depth (**Figure 61**).
4. **Connect pipes.** Connect threaded water lines using provided connector fittings (do not use lubricants or sealants). Connect non-threaded water lines using provided fittings and cement, inserting pipe to full depth of each fitting (a short connector pipe may be provided to bridge the gap between sections).
5. **Test.** Test connections for leaks.
6. **Seal floor.** Securely replace insulation and access panels.

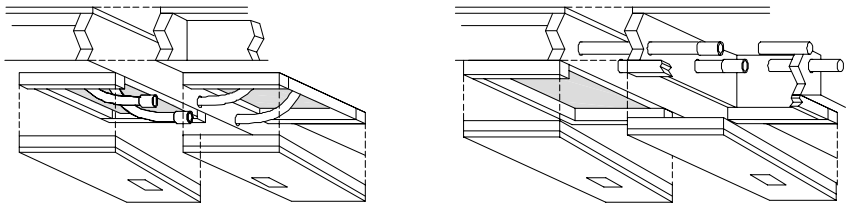

Applying cement. Follow cement manufacturers instructions with respect to application and drying time. Allow cement to fully cure before filling pipes with water.

Choosing cement type. Use the proper cement for water lines as it may differ from the cement used for the DWV system.

Figure 61. *Water line crossover with access panels*

STEP 5. CONNECT DRAIN, WASTE, AND VENT LINES

Complete portions of the drain, waste, and vent (DWV) system that are below the floor as follows:

1. **Remove caps.** Remove shipping covers from pipes extending through the bottom board; inspect pipes and fittings and clean them of dirt, obstructions, and burrs.
2. **Assemble pipes.** Using the drain schematic drawing provided with the home, begin assembling the DWV system starting at the location farthest from the sewer/septic connection and working towards the outlet, fastening the pipe with cement or adjustable screw-clamp connectors, if provided (**Figure 62**). As the system is assembled, support the piping with temporary blocking. Unless otherwise noted on the schematic diagram, provide a minimum 1/4 inch per foot slope towards the sewer/septic using a plumber's level. Where a slope of 1/4 inch per foot cannot be maintained, use a minimum slope of 1/8 inch per foot and install of a full-size clean-out at the uppermost point of the run (**Figure 63**).

Providing required clearances. Provide the drain outlet with a minimum clearance of three inches in any direction from all parts of the structure or any appurtenances and with not less than 18 inches unrestricted clearance directly in front of the drain outlet. Provide any cleanouts with a minimum clearance of 12 inches directly in front of its opening.

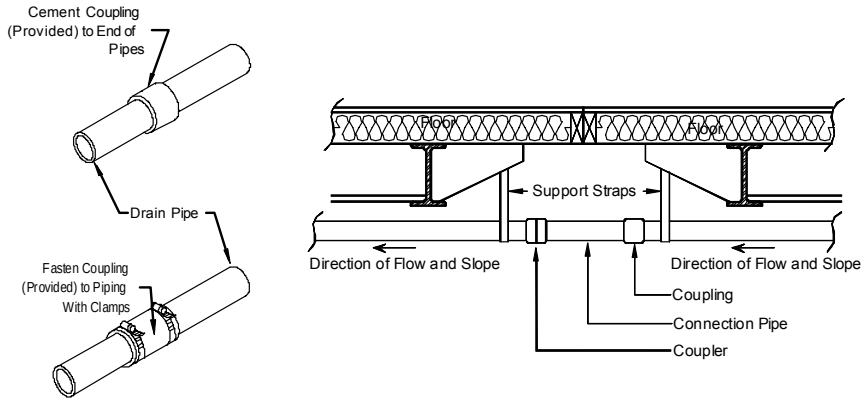

Figure 62. *Drain crossover connection*

Figure 63. *DWV system*

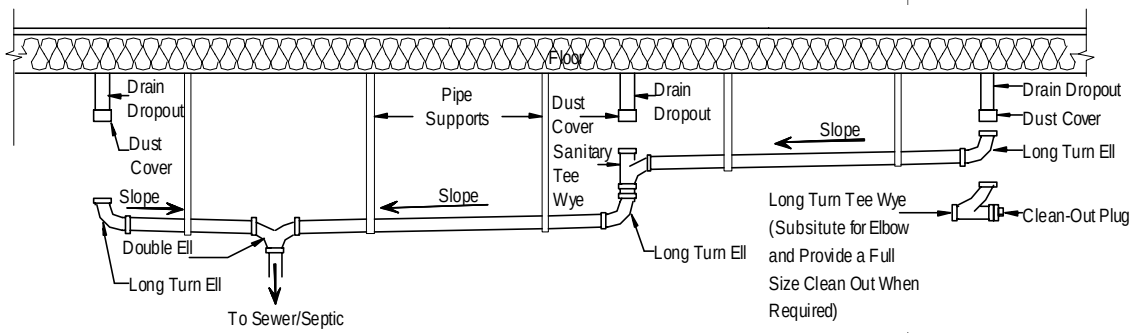

3. **Test.** Conduct a two-part leakage test on the completed drainage system as follows:
   - Part 1. With all fixtures connected, and all tub and shower drains plugged, fill the system with water to the rim of the toilet bowl through a higher fixture. Release all trapped air, replace tub and shower plugs, backfill fixtures, and allow the system to stand at least 15 minutes. Check for leaks. Drain the system. If leaks are found, repair and retest.
   - Part 2. Plug all fixtures, sinks, showers, and tubs and fill with water. Release the water in all fixtures simultaneously to obtain the maximum possible drain piping flow. As water is draining, check for leaks. If any are found, repair and retest.
4. **Connect to outlet.** Connect the main drain line to the site sewer/septic hookup, using an approved elastomeric coupling (**Figure 64**).

Choosing glues. Use only solvents and glues compatible with the pipe (ABS or PVC). Follow manufacturer's instructions.

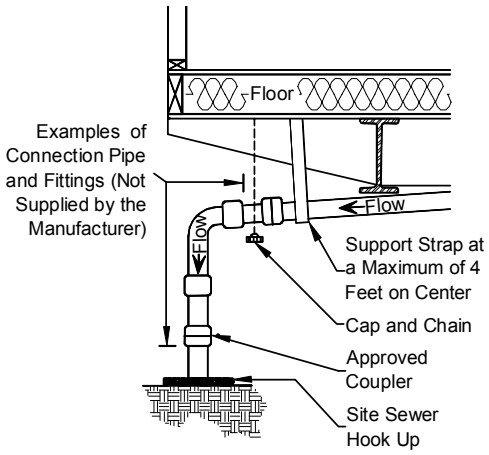

Figure 64. *DWV connection to sewer/septic*

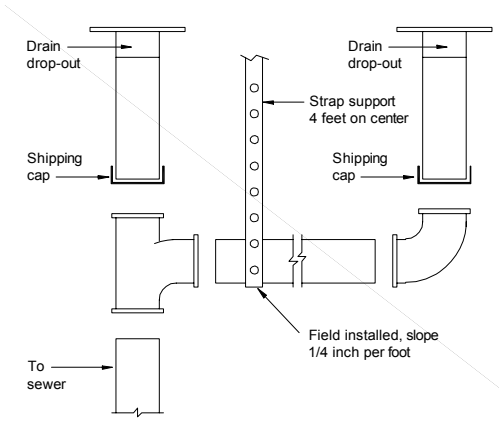

Figure 65. *DWV pipe support method*

5. **Install supports.** Install permanent drain line supports at a distance of four feet o.c. or less (see **Figure 62**, **Figure 64**, **Figure 65** and **Figure 66**).

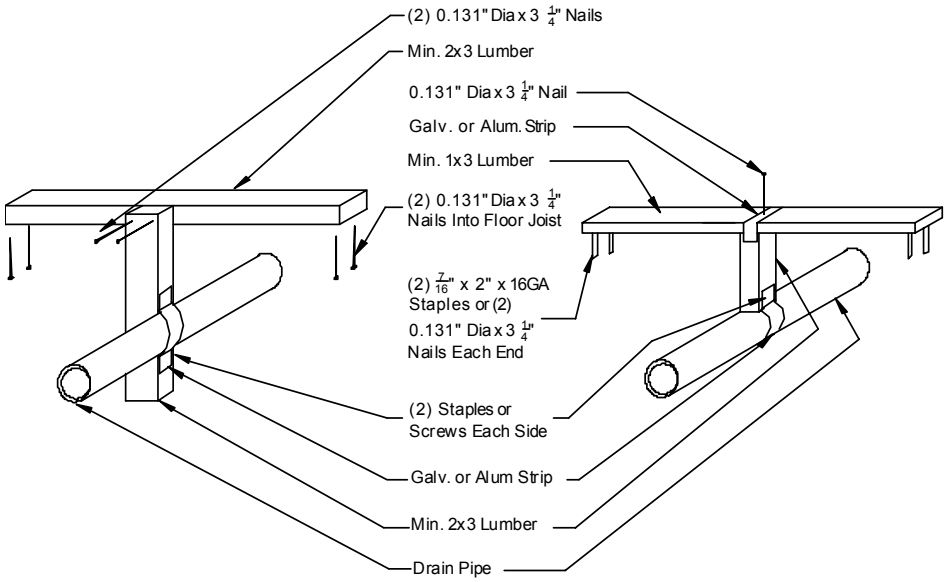

Figure 66. *DWV pipe optional support method*

6. **Insulate.** Replace all insulation.

STEP 6. CONNECT GAS LINES

The gas crossover connection may use quick disconnect fittings or threaded connectors. Find the connection location below the floor at the marriage line and gather the connectors (they may be shipped loose if not present under the home).

For quick disconnect fittings (**Figure 67**), remove any dust caps and then with one hand, pull back on the quick disconnect device, snap it over the quick disconnect adaptor and release it to complete the connection.

For threaded connectors (**Figure 68**), remove the black cap and nipple (or any other plugs, such as a black iron plug) from both the supply and receiving sides and screw the connector onto the supply and return pipes as necessary.

Check for leaks before connecting to gas service (see **Connect Utilities, STEP 3. CONNECT GAS SERVICE,** p. 85).

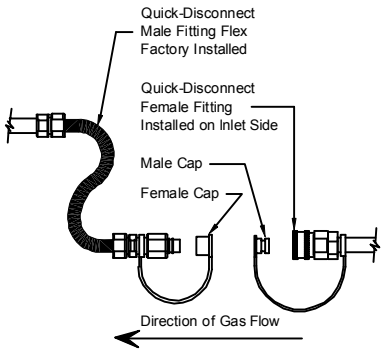

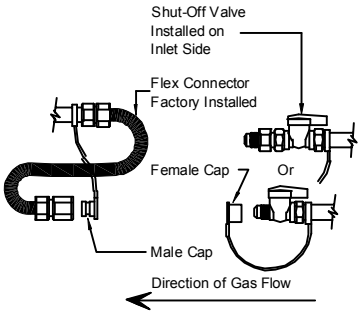

Figure 67. *Gas crossover with quick disconnect fittings*

Figure 68. *Gas crossover with threaded connectors*

STEP 7. CONNECT TELEPHONE AND CABLE TV WIRING

Install telephone and cable television wiring in accordance with the requirements of the LAHJ, the NEC, and NFPA No.70-2005. When making crossover connections or installing telephone or cable television wires, do not run them in the same raceway as, or in close proximity to, high voltage electrical conductors or cables.

Wires should only be installed by trained professionals.

Protect pipes from freezing. If the home is to be left unheated in cold weather, pour antifreeze solution into all drain traps, including sinks, tubs, and toilets. Be sure that the antifreeze is safe for the fixtures and P-traps.

Installing quick disconnect fittings. Do not use tools, lubricants, or sealants with quick disconnect fittings.

Gas test precautions. Do not connect to gas service until tests described in Connect Utilities have been successfully completed.

Installing wiring. When installing telephone and cable television wires, do not damage electrical wires, plumbing lines, or ducts. Serious personal injury or death could result from damage to electrical wires.

► go to **Complete the Interior** (p. 65)

Complete the Interior

This chapter covers the completion of the home's interior finishes including finishing walls, ceilings, flooring, trim, and miscellaneous items.

Follow the Steps below:

- **STEP 1. ALIGN MARRIAGE WALLS** (p. 65)
- **STEP 2. FINISH GYPSUM BOARD** (p. 65)
- **STEP 3. COMPLETE WALL AND CEILING FINISHES** (p. 65)
- **STEP 4. COMPLETE CARPET** (p. 66)
- **STEP 5. COMPLETE TRIM** (p. 66)
- **STEP 6. INSTALL SHIP LOOSE ITEMS** (p. 66)

STEP 1. ALIGN MARRIAGE WALLS

Align and secure walls at marriage line openings as follows:

1. **Align walls.** Align walls and clamp in place.
2. **Fasten walls.** Secure clamped walls together with metal straps or long screws so they do not move when the clamps are removed. Insert wood wedges in gaps between walls, and glue and screw to create a tight connection.
3. **Fill gaps.** Fill any remaining gaps with wood or sheathing material.

Does the home require patching and finishing gypsum board walls or ceilings?

- ► **YES,** go to **STEP 2. FINISH GYPSUM BOARD,** (p. 65)
- ► **NO,** go to **STEP 3. COMPLETE WALL AND CEILING PANELS,** (p. 65).

STEP 2. FINISH GYPSUM BOARD

Finish all unfinished gypsum board walls and ceilings as follows:

1. **Install panels.** Install ship loose gypsum panels using a 1/4 inch diameter bead of adhesive on all framing members and minimum 1-1/2 inch long drywall screws, nails, or staples at six inches o.c. along panel edges and 12 inches o.c. in the field into framing members.
2. **Mud seams.** Mud and tape all seams and corners, filling all fastener depressions. Follow mud manufacturer's directions.
3. **Paint.** When the final coat of mud is dry, prime and paint all unfinished gypsum board to match existing paint color and finish texture.

Does the home have pre-finished interior wall panels at the marriage line?

- ► **YES,** go to **STEP 3. COMPLETE WALL AND CEILING PANELS,** (p. 65)
- ► **NO,** go to **STEP 4. COMPLETE CARPET,** (p. 66).

STEP 3. COMPLETE WALL AND CEILING FINISHES

Install interior ship loose wall and/or ceiling panels using a 1/4 inch diameter bead of

Fastening gypsum. When attaching gypsum board, depress, but do not break the paper face with the fastener. Breaking the paper will weaken the connection.

Using alternative materials. Obtain the home manufacturer's approval before using interior finish materials other than those provided with the home.

polyvinyl acetate (PVA) adhesive on all framing members and fasten with minimum 1-1/2 inch long staples or nails at six inches o.c. along panel edges and 12 inches o.c. in the field into framing members.

STEP 4. COMPLETE CARPET

Install and seam ship loose or rolled carpet as follows:

1. **Prepare floor.** Clean the floor of all dirt and debris and smooth the floor deck at the marriage line seams as necessary to ensure a level and smooth surface.
2. **Lay pad.** Lay down the carpet pad, if provided.
3. **Stretch carpet.** Ensuring all carpet "grain" runs in the same direction, fit and secure the carpet using a power carpet stretcher. Stretch the carpet up to the seam and tack it down temporarily until the carpet is seamed.
4. **Butter carpet.** "Butter" with carpet adhesive the edges of the carpet along the seam.
5. **Seam carpet.** Place heat bond tape under the seam with the glue side next to the carpet and apply heat from a seaming iron to the top of the seam, pressing the carpet into the glue.
6. **Keep scraps.** Retain reasonable size carpet scraps to protect carpet and flooring during move-in.

Installing carpet. Only experienced carpet installers should install carpet. Failure to follow the carpet manufacturer's directions may void the carpet warranty.

Stagger seams. Stagger all seams. For example, locate the carpet pad seam three inches to left of marriage line and the carpet seam three inches to right of marriage line.

STEP 5. COMPLETE TRIM

Using fine gauge wire staples or pin nails, install ship loose molding and wainscot paneling to finish trimming out ceilings, marriage line walls, front and rear end walls, and passageway doors where necessary.

STEP 6. INSTALL SHIP LOOSE ITEMS

Remove all strapping, blocking, and packaging from appliances, windows, and doors. Install any drapes, mini-blinds, mirrors, door stops, closet shelves, and hardware per the product manufacturer's installation instructions.

Proceed based on the foundation type:

- ► **Pier and ground anchor,** go to **Install Stabilizing Systems,** (p. 67)
- ► **Load bearing perimeter wall,** go to **Connect Utilities** (p. 79).

Install Stabilizing Systems

This chapter covers the design and installation of the stabilizing system which secures the home against lateral and upward forces caused by wind. The system covered here uses earth (or ground) anchors and steel straps connected to the home's longitudinal steel beams and/or exterior walls. Stabilizer plates may also be used to prevent the anchor head from moving laterally in the ground. An anchor, strap, and stabilizer plate (if used) together are referred to as a tie-down.

Anchors can also be mounted in concrete footings when there is enough concrete mass (weight) to resist the lateral and upward forces. This type of system is not covered in this manual.

Follow the Steps below:

- **STEP 1. DETERMINE ANCHOR LOCATIONS** (p. 67)
- **STEP 2. DETERMINE TIE-DOWN CONFIGURATION** (p. 73)
- **STEP 3. SELECT ANCHORS** (p. 73)
- **STEP 4. INSTALL ANCHORS** (p. 74)
- **STEP 5. INSTALL STRAPS** (p. 75)
- **STEP 6. TIGHTEN AND ADJUST STRAPS** (p. 78)

STEP 1. DETERMINE ANCHOR LOCATIONS

Create a sketch of the home plan showing the exterior walls, marriage line(s) (if any) and frame I-beams (this will be similar to the base sketch created in **Prepare Footings**, page 19).

See **Table 26** for a list of anchor locations, types, and where they are required. Pages where the requirements are provided are noted in the last column.

As each anchor location is determined, mark it on the sketch, noting important dimensions such as spacing between anchors. When complete, this will be the home's tie-down plan (**Figure 69** and **Figure 70**).

TABLE 26. ANCHOR LOCATION TYPES

Location	Type	Wind Zone I	Wind Zones II and III	See page
Sidewall	Frame	Yes	Yes	68
	Vertical	No[1]	Yes	72
End wall	Frame	No	Yes	72
	Vertical	No	No	--
Shear wall[2]	Vertical	Sometimes	Yes	72
Marriage line	Vertical	Sometimes	Yes	72
Tag Unit	Frame	Yes	Yes	See Supplemental
	Vertical	No	Yes	See Supplemental
Porch Post	Vertical	Sometimes	Yes	See Supplemental
Offset Unit	Frame	Yes	Yes	See Supplemental
	Vertical	Sometimes	Yes	See Supplemental

[1] Connect any factory-installed sidewall tie-down straps to a ground anchor regardless of the wind

Need for a stabilizing system. The manufactured home must be secured against the wind by the use of an anchor assembly or an alternative foundation system. Where site or other conditions prohibit the use of the manufacturer's instructions, a registered engineer or registered architect must design the stabilizing system.

Flood and seismic forces. The stabilizing system requirements in this chapter do not consider flood or seismic loads and are not intended for use in flood or seismic hazard areas. In those areas retain a registered engineer or registered architect to design the stabilizing system.

Underground Utilities. Before installation of any ground anchors, determine that any anchor will not be close to any underground cables or pipes. Failure to

zone in which the home is placed.

2. Install interior shear wall anchors and marriage line anchors prior to moving the home over the top of the anchor locations and then return to Set the Home or Complete Multi-Section Set respectively.

Figure 69 and **Figure 70** illustrate typical anchor locations for a double-section home in Wind Zone I and Wind Zones II and III respectively.

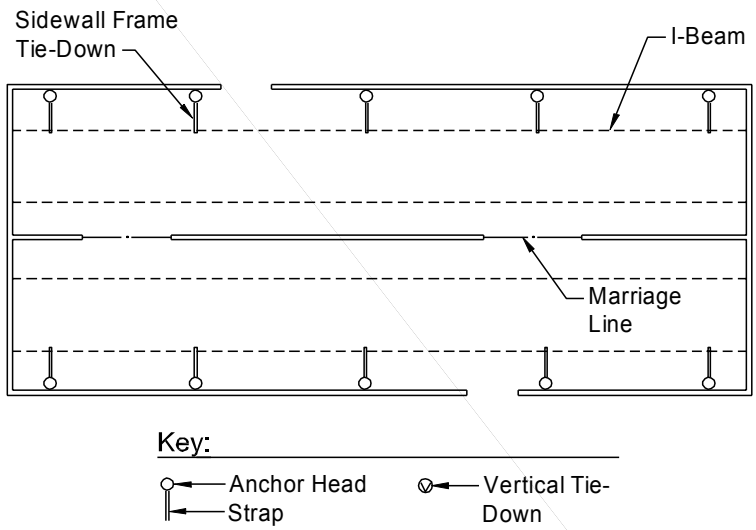

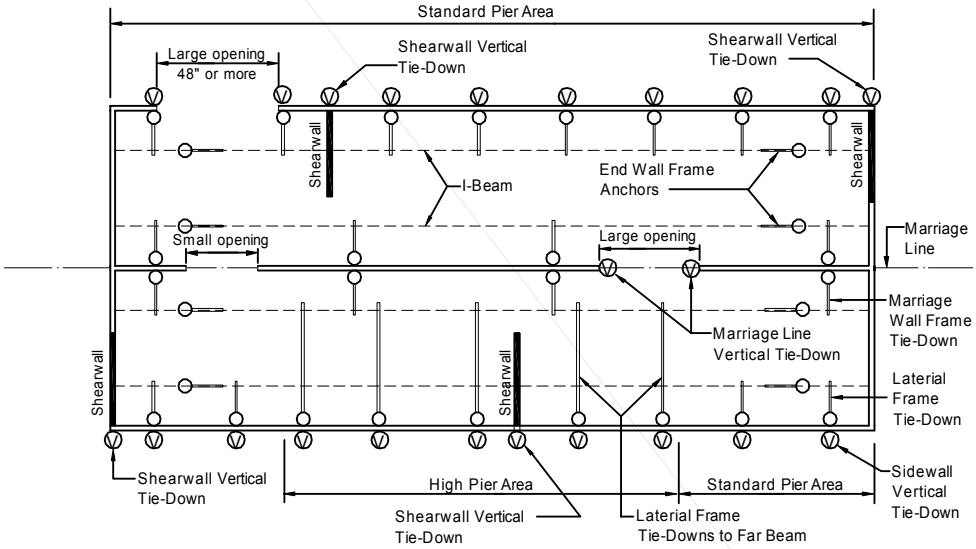

SIDEWALL FRAME ANCHORS

Use **Table 27**, **Table 28** and **Table 29** to determine the spacing between anchors for Wind Zones I, II, and III, respectively. Spacing requirements will vary depending on the type of home (single or multi-section), the slope of the roof, the width of the floor for each section, the sidewall height, I-beam spacing, and the height from the ground to the strap attachment point. Determine the values for the home. Using the table for the appropriate wind zone, determine the column and row that corresponds to the characteristics of the home. The value on the tables is the maximum distance between anchors. Keep in mind that sidewall frame tie-downs must be located no more than two feet from each end wall.

determine the location of underground utilities, especially electrical cables or gas pipes, may result in serious personal injury or death.

Figure 69. *Typical anchor locations for a double-section home in Wind Zone I*

08-21-2009

Figure 70. *Typical anchor locations for a double-section home in Wind Zones II or III*

Maximum spacing requirements. The LAHJ may have anchor spacing requirements that supersede the values provided in this manual.

TABLE 27. WIND ZONE I SIDEWALL FRAME ANCHOR MAXIMUM SPACING

Floor width	Sidewall height	I-beam spacing	Height from ground to strap attachment	Roof slope maximum 4.35/12 (20 degrees)		Roof slope maximum 6/12 (26.5 degrees)
				Single section	Double section	Double section
10'	Up to 7'-6"	82" Max.	Up to 25"	--	21'-0" *	11'-6" *
			25" to 48"	--	16'-0" *	9'-6" *
			48" to 67"	--	14'-0" *	8'-6" *
		99.5" Max.	Up to 25"	--	21'-0" *	12'-0" *
			25" to 48"	--	16'-6" *	10'-0" *
			48" to 67"	--	14'-6" *	8'-6" *
	More than 7'-6" to 9'-0"	82" Max.	Up to 25"	--	17'-0" *	10'-0" *
			25" to 48"	--	13'-6" *	8'-6" *
			48" to 67"	--	11'-0" *	7'-6" *
		99.5" Max.	Up to 25"	--	17'-0" *	10'-6" *
			25" to 48"	--	13'-6" *	8'-6" *
			48" to 67"	--	12'-0" *	8'-0" *
12'	Up to 7'-6"	99.5" Max.	Up to 25"	18'-6" *	24'-0" *	11'-6" *
			25" to 48"	15'-6" *	17'-6" *	9'-6" *
			48" to 67"	14'-0" *	15'-6" *	8'-6" *
	More than 7'-6" to 9'-0"	99.5" Max.	Up to 25"	15'-6" *	19'-0" *	10'-0" *
			25" to 48"	13'-0" *	14'-6" *	8'-6" *
			48" to 67"	12'-0" *	12'-6" *	7'-6" *
14'	Up to 7'-6"	99.5" Max.	Up to 25"	12'-6"	17'-6"	11'-0" *
			25" to 48"	16'-6" *	19'-0" *	9'-0" *
			48" to 67"	14'-6" *	16'-0" *	8'-6" *
	More than 7'-6" to 9'-0"	99.5" Max.	Up to 25"	10'-6"	13'-6"	10'-0" *
			25" to 48"	13'-6" *	15'-6" *	8'-6" *
			48" to 67"	12'-6" *	13'-6" *	7'-6" *
16'	Up to 7'-6"	99.5" Max.	Up to 25"	15'-6"	23'-6"	8'-6"
			25" to 48"	10'-0"	20'-0"	9'-0" *
			48" to 67"	15'-0" *	17'-0" *	8'-0" *
	More than 7'-6" to 9'-0"	99.5" Max.	Up to 25"	12'-0"	17'-6"	9'-6" *
			25" to 48"	14'-0" *	10'-0"	8'-0" *
			48" to 67"	13'-0" *	14'-0" *	7'-6" *
18'	Up to 7'-6"	99.5" Max.	Up to 25"	17'-6"	--	--
			25" to 48"	12'-0"	--	--
			48" to 67"	9'-6"	--	--
	More than 7'-6" to 9'-0"	99.5" Max.	Up to 25"	14'-0"	--	--
			25" to 48"	10'-0"	--	--
			48" to 67"	8'-0"	--	--

* Indicates a configuration that will require an additional strap connected to the far beam (see **Figure 72**).

08-21-2009

TABLE 28. WIND ZONE II SIDEWALL FRAME ANCHOR MAXIMUM SPACING

Floor width	Sidewall height	I-beam spacing	Height from ground to strap attachment	Roof slope maximum 4.35/12 (20 degrees)		Roof slope maximum 6/12 (26.5 degrees)
				Single section	Double section	Double section
10' (118" Max.)	Up to 7'-6"	82" Max.	Up to 25"	--	8'-6" *	4'-6" *
			25" to 48"	--	7'-6" *	4'-6" *
			48" to 67"	--	7'-0" *	4'-6" *
		99.5" Max.	Up to 25"	--	8'-6" *	4'-6" *
			25" to 48"	--	8'-0" *	4'-6" *
			48" to 67"	--	7'-0" *	4'-6" *
	More than 7'-6" to 9'-0"	82" Max.	Up to 25"	--	7'-0" *	3'-6" *
			25" to 48"	--	6'-6" *	3'-6" *
			48" to 67"	--	6'-0" *	3'-6" *
		99.5" Max.	Up to 25"	--	7'-0" *	4'-0" *
			25" to 48"	--	6'-6" *	4'-0" *
			48" to 67"	--	6'-0" *	4'-0" *
12' (142" Max.)	Up to 7'-6"	99.5" Max.	Up to 25"	5'-6" *	8'-6" *	4'-6" *
			25" to 48"	5'-6" *	8'-0" *	4'-6" *
			48" to 67"	5'-6" *	7'-6" *	4'-6" *
	More than 7'-6" to 9'-0"	99.5" Max.	Up to 25"	4'-0" *	7'-6" *	3'-6" *
			25" to 48"	4'-0" *	7'-0" *	4'-0" *
			48" to 67"	4'-6" *	6'-6" *	4'-0" *
14' (164" Max.)	Up to 7'-6"	99.5" Max.	Up to 25"	5'-6"	5'-6"	3'-0"
			25" to 48"	5'-6" *	8'-0" *	4'-0" *
			48" to 67"	5'-6" *	7'-6" *	4'-0" *
	More than 7'-6" to 9'-0"	99.5" Max.	Up to 25"	5'-0"	5'-0"	3'-0"
			25" to 48"	4'-0" *	7'-0" *	3'-6" *
			48" to 67"	4'-0" *	6'-6" *	3'-6" *
16' (186" Max.)	Up to 7'-6"	99.5" Max.	Up to 25"	6'-6"	6'-6"	3'-6"
			25" to 48"	5'-0"	5'-0"	4'-0" *
			48" to 67"	5'-6" *	8'-0" *	4'-0" *
	More than 7'-6" to 9'-0"	99.5" Max.	Up to 25"	5'-6"	5'-6"	3'-0"
			25" to 48"	4'-0"	4'-0"	3'-6" *
			48" to 67"	4'-0" *	6'-6" *	3'-6" *
18' (204" Max)	Up to 7'-6"	99.5" Max.	Up to 25"	7'-0"	--	--
			25" to 48"	5'-6"	--	--
			48" to 67"	4'-6"	--	--
	More than 7'-6" to 9'-0"	99.5" Max.	Up to 25"	6'-0"	--	--
			25" to 48"	5'-0"	--	--
			48" to 67"	4'-0"	--	--

***** Indicates a configuration that will require an additional strap connected to the far beam (see **Figure 72**).

08-21-2009

TABLE 29. WIND ZONE III SIDEWALL FRAME ANCHOR MAXIMUM SPACING

Floor width	Sidewall height	I-beam spacing	Height from ground to strap attachment	Roof slope maximum 4.35/12 (20 degrees)		Roof slope maximum 6/12 (26.5 degrees)
				Single section	Double section	Double section
10' (118" Max.)	Up to 7'-6"	82" Max.	Up to 25"	--	5'-6" *	3'-0" *
			25" to 48"	--	5'-6" *	3'-0" *
			48" to 67"	--	5'-6" *	3'-0" *
		99.5" Max.	Up to 25"	--	5'-6" *	3'-6" *
			25" to 48"	--	6'-0" *	3'-6" *
			48" to 67"	--	6'-0" *	3'-6" *
	More than 7'-6" to 9'-0"	82" Max.	Up to 25"	--	4'-6" *	NA
			25" to 48"	--	4'-6" *	NA
			48" to 67"	--	4'-6" *	NA
		99.5" Max.	Up to 25"	--	5'-0" *	3'-0" *
			25" to 48"	--	5'-0" *	3'-0" *
			48" to 67"	--	5'-0" *	3'-0" *
12' (142" Max.)	Up to 7'-6"	99.5" Max.	Up to 25"	4'-0" *	5'-6" *	3'-0" *
			25" to 48"	4'-0" *	5'-6" *	3'-0" *
			48" to 67"	4'-0" *	5'-6" *	3'-0" *
	More than 7'-6" to 9'-0"	99.5" Max.	Up to 25"	3'-0" *	5'-0" *	NA
			25" to 48"	3'-0" *	5'-0" *	NA
			48" to 67"	3'-0" *	5'-0" *	NA
14' (164" Max.)	Up to 7'-6"	99.5" Max.	Up to 25"	4'-6"	4'-6"	3'-0" *
			25" to 48"	4'-0" *	5'-6" *	3'-0" *
			48" to 67"	4'-0" *	5'-6" *	3'-0" *
	More than 7'-6" to 9'-0"	99.5" Max.	Up to 25"	4'-0"	4'-0"	NA
			25" to 48"	3'-0" *	5'-0" *	NA
			48" to 67"	3'-0" *	5'-0" *	NA
16' (186" Max.)	Up to 7'-6"	99.5" Max.	Up to 25"	5'-6"	5'-6"	3'-0"
			25" to 48"	4'-0"	4'-0"	NA
			48" to 67"	4'-0" *	5'-6" *	3'-0" *
	More than 7'-6" to 9'-0"	99.5" Max.	Up to 25"	4'-6"	4'-6"	NA
			25" to 48"	3'-6"	3'-6"	NA
			48" to 67"	3'-0" *	4'-6" *	NA
18' (204" Max.)	Up to 7'-6"	99.5" Max.	Up to 25"	6'-0"	--	--
			25" to 48"	4'-6"	--	--
			48" to 67"	4'-0"	--	--
	More than 7'-6" to 9'-0"	99.5" Max.	Up to 25"	5'-0"	--	--
			25" to 48"	4'-0"	--	--
			48" to 67"	3'-6"	--	--

* Indicates a configuration that will require an additional strap connected to the far beam (see **Figure 72**).

08-21-2009

SIDEWALL VERTICAL ANCHORS

Homes designed for Wind Zones II and III also require vertical tie-downs along the sidewalls. The vertical tie-down anchor straps (or brackets for connecting to the home) are factory installed and indicate the locations. Vertical and frame sidewall tie-downs may connect to one double-headed anchor or each to its own dedicated anchor.

Any factory-installed sidewall tie-down straps must be connected to a ground anchor regardless of the wind zone in which the home is placed.

END WALL FRAME ANCHORS

End wall frame tie-downs are especially important for homes that are wider and have higher roof pitches because those features increase the surface area exposed to wind loads at the ends of the home. Use **Table 30** to determine the number of end wall frame anchors required at the each end of each home section.

TABLE 30. END WALL FRAME ANCHORS REQUIRED PER HOME SECTION ON EACH END OF THE HOME

	Maximum sidewall height	Maximum roof pitch	Wind Zone I	Wind Zone II				Wind Zone III			
			12'-18' section width	12' section width	14' section width	16' section width	18' section width	12' section width	14' section width	16' section width	18' section width
Single Section	7'-6"	4.35/12	None	2	3	3	3	3	3	3	4
	9'-0"	4.35/12	None	3	3	3	4	3	4	4	4
Multi-Section	7'-6"	4.35/12	None	5	5	6	---	5	6	7	---
		6/12	None	5	6	7	---	6	7	8	---
	9'-0"	4.35/12	None	5	6	7	---	6	7	8	---
		6/12	None	6	7	8	---	7	8	NA	---

SHEARWALL ANCHORS

Shearwalls are sections of interior or exterior wall engineered to withstand racking forces. Some interior shearwalls require anchoring to resist these forces. The location of any shearwall requiring a ground anchor will be clearly indicated by the presence of a coiled G-strap. Straps may be located along the sidewall or the mating line.

Each shearwall tie-down requires a dedicated anchor. Do not connect shearwall tie-downs to the same anchor as frame or other tie-downs.

MARRIAGE LINE VERTICAL ANCHORS

In Wind Zones II and III (and sometimes in Wind Zone I), anchors are required along the marriage line to resist uplift forces. The location of any ground anchor will be clearly indicated by the presence of a G-coiled strap. The straps may be classified as G-1 (two straps sharing one anchor) or G-2 (two straps each with its own anchor). See **Figure 71** for the two configurations.

08-21-2009

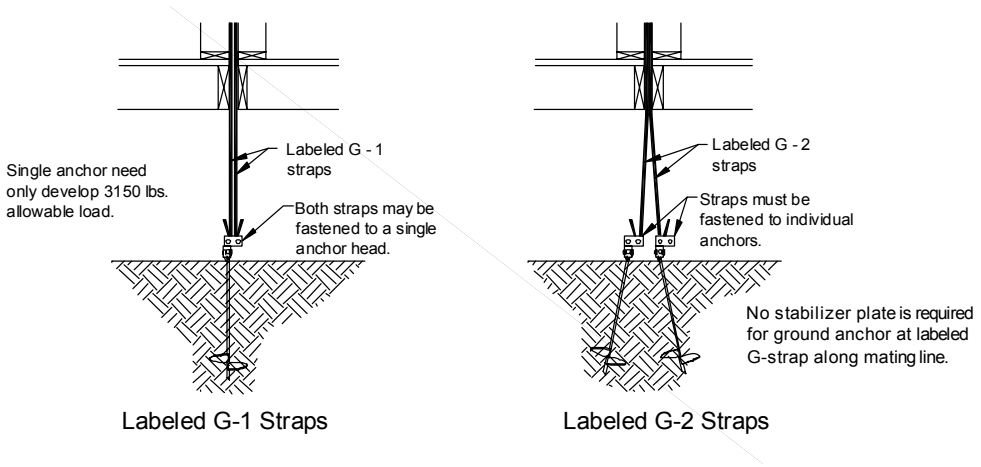

Figure 71. *Marriage Line Vertical Anchors*

TAG UNIT ANCHORS
See supplemental pages if this particular home has a tag that requires frame or vertical anchors.

PORCH POST ANCHORS
See supplemental pages if this particular home has a porch that requires anchors.

OFFSET UNIT ANCHORS
See supplemental pages if this particular home has an offset that requires anchors.

When to install marriage line anchors. Anchors along the marriage line must be installed prior to the second half of a multi-section home being set.

08-21-2009

STEP 2. DETERMINE TIE-DOWN CONFIGURATION

There are two primary tie-down configurations: the near beam and the far beam methods. If the anchor spacing selected in the appropriate anchor table (**Table 27**, **Table 28** or **Table 29**) has an asterisk (*) then use the far beam method. Otherwise, use the near beam method (**Figure 72**). Each method varies by wind zone as described below.

- **Near beam method.** For all Wind Zones, connect an anchor strap from the anchor head to the beam closest to the anchor. In addition for Wind Zones II and III, connect a vertical strap from the sidewall of the home to the anchor head using a double-headed anchor.
- **Far beam method.** For Wind Zone I connect anchor straps from the anchor head (using a double-headed anchor) to both of the home's main frame beams. For Wind Zones II and III connect one anchor strap from the anchor head (using a double-headed anchor) to the home's far beam and one to the sidewall of the home.

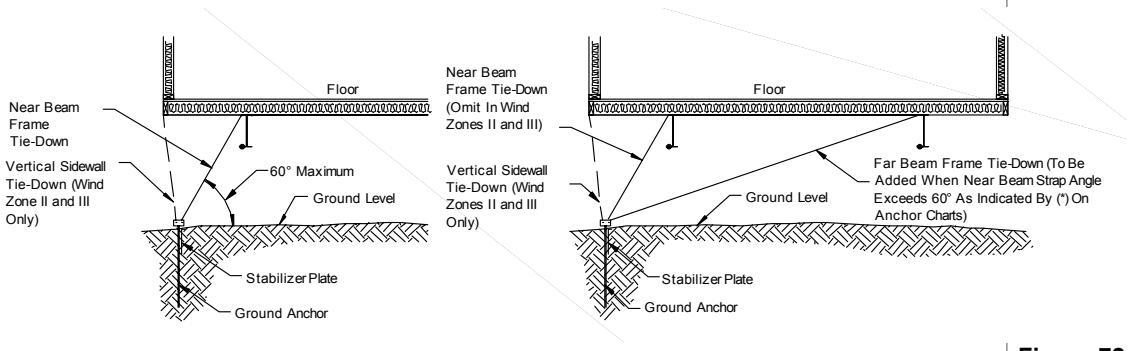

Figure 72. *Lateral tie-down configurations*

STEP 3. SELECT ANCHORS

Use the torque probe results from **Prepare the Site, STEP 6. DETERMINE GROUND ANCHOR HOLDING CAPACITY** (p. 17) and the anchor manufacturer instructions; select the type and length of anchor to use. The installed ground anchor size (length) must be listed (i.e. approved) for the soil class.

Make sure the anchor is of sufficient length such that the top of the helix is below the

frost line. Select a shaft diameter sufficient to resist excessive torsion, “ring-off” (when the helix or anchor head separates from shaft) or shaft splitting. Consult the anchor supplier for guidance.

Review all of **STEP 4. INSTALL ANCHORS** (p. 74) and **STEP 5. INSTALL STRAPS** (p. 75) before making final anchor selections to determine when single-headed vs. double-headed anchors should be used. Follow the specifications in Table 30 when selecting stabilizing system components.

TABLE 31. ANCHOR SYSTEM MATERIALS SPECIFICATIONS

Component	Specification
Anchors	Anchors must be tested and listed to resist a minimum ultimate load of 4,725 lbs and a minimum allowable working load of 3,150 lbs or ultimate and corresponding working load limited by soil conditions and anchor length. The working load is the maximum load the designer can use.
Straps	Straps must be minimum 1-1/4” x 0.035” zinc-coated (0.30 oz per sq ft) steel strapping conforming to ASTM D3953-97, Type 1, Grade 1, Finish B with a minimum allowable working load capacity of 3,150 lbs and a minimum ultimate load of 4,725 lbs. Slit or cut edges of zinc-coated strapping do not need to be zinc coated.
Stabilizer plates	The size and type of stabilizer plate, if required by the ground anchor manufacturer, will be specified in the anchor manufacturer’s instructions. Alternatively, ABS stabilizer plates may be used when listed and certified for such use.

STEP 4. INSTALL ANCHORS

Before beginning anchor installation, check for obstructions under the home such as piers and frame members that may interfere with the tie down strapping. Check with utility companies to determine the location of underground utilities, such as electrical and phone lines, and water, sewer, and gas pipes that may be buried in potential anchor locations. Also check for homeowner-installed wires and pipes, such as those connecting exterior lighting or sheds to the home. These must also be avoided.

Grading area around anchors. Anchor heads should not rest in sunken spots. Grade the ground so that water does not collect around anchor heads, but runs away from the anchor and out from under the home. Do not bury anchor heads.

FRAME ANCHORS

Frame anchors can be installed in two ways, in-line and against a stabilizer plate. The two methods are discussed below:

In-Line Configuration

The in-line configuration (**Figure 73**) for homes can be used in Wind Zone I only. Typically, in-line anchors are used under high homes where the anchors can be installed from under the home after the home is set. In-line anchors can also be installed before the home is set; however, precisely aligning the anchor with the home both vertically and horizontally is difficult. Using swivel connectors for the strap to beam connection can provide some horizontal flexibility.

To install in-line frame anchors, drive the anchor into the ground at an angle and location such that a straight line can be drawn from the tip of the anchor through the anchor head and to the connection point on the I-beam (**Figure 74**).

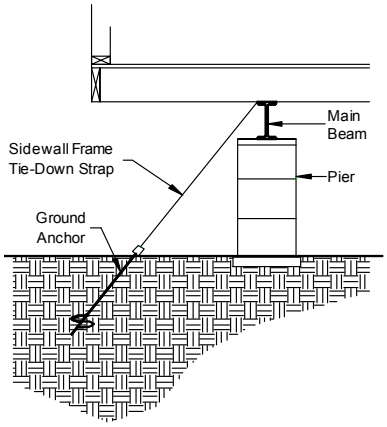

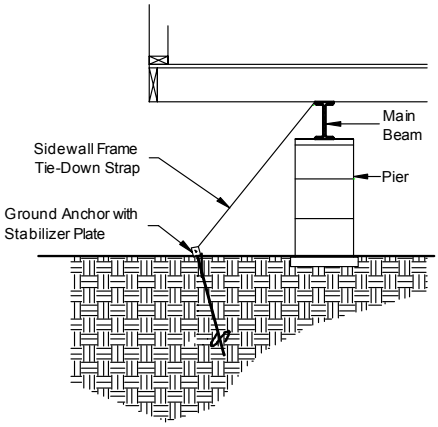

Figure 73. *In-line anchor configuration*

Figure 74. *Stabilizer plate configuration*

Stabilizer Plate Configuration

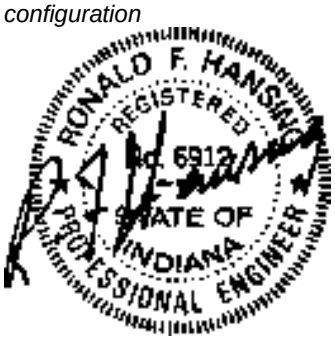

08-21-2009

Stabilizer plate configurations (**Figure 74**) are suitable for homes in all wind zones. Anchors may be installed after the home is set. A stabilizer device, typically an ABS or metal plate, is used to prevent the top of the anchor from slicing through the soil when the load is applied. Stabilizer plates are available in a variety of widths. Choose the widest plate that can be driven into the soil to maximize resistance to movement. The LAHJ may have stabilizer plate requirements.

Install anchors with stabilizer plates as follows:

1. **Locate anchor**. Select a location for the anchor under the home but within six inches of the exterior wall (**Figure 75**). Avoid locations that will interfere with skirting.

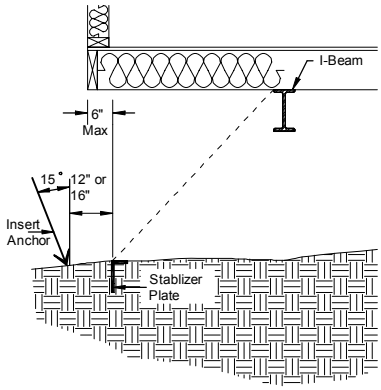

Figure 75. *Determining anchor and stabilizer plate location*

08-21-2009

2. **Install anchor.** To assure that the anchor attachment point will end up at the stabilizer plate, start the anchor insertion approximately 12 inches back from the desired location if using a 48 inch long anchor, or approximately 16 inches if using a 60 inch long anchor. Install the anchor at about 15 degrees off vertical, with the head tilted away from the home. Install the anchor to a depth of approximately one half its length.
3. **Drive stabilizer plate.** Drive the stabilizer plate into the ground to its full depth at the point determined in Step 1.
4. **Complete anchor installation.** Screw the anchor the rest of the way into the ground. The finished anchor must be installed to its full depth.

Soil depression. Do not locate anchor heads in soil depressions where water may pool.

VERTICAL ANCHORS

To install vertical anchors, screw the anchor into the ground directly under the strap attachment point on the home until the bottom of the anchor head is flush with the ground or no more than one inch above grade.

STEP 5. INSTALL STRAPS

Follow the instructions below to connect straps from the home to sidewall frame, end wall frame and vertical anchors.

Always protect straps at sharp corners including around I-beams with radius clips or other methods (**Figure 76**). Radius clips may be fabricated from 26ga (min) by 1 ¼-inch wide galvanized steel strap formed to fit around corners.

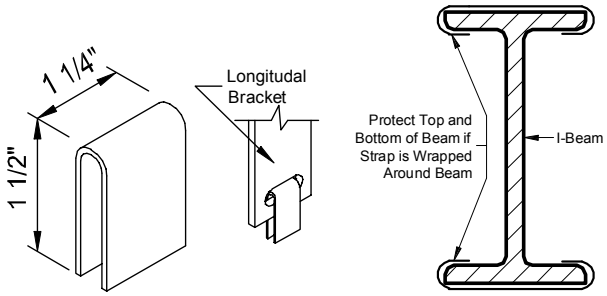

Figure 76. *Radius clips*

SPLICING STRAPS

Splicing may be required when a pre-cut strap is of insufficient length. Splices in tie-down straps are not permitted in a 'Y' configuration. Overlap straps by 12 inches, applying one splice clip from above and the other from below; use a crimping tool to tightly seal the splice clips (**Figure 77**). Do not run any portion of the splice through an anchor head bolt.

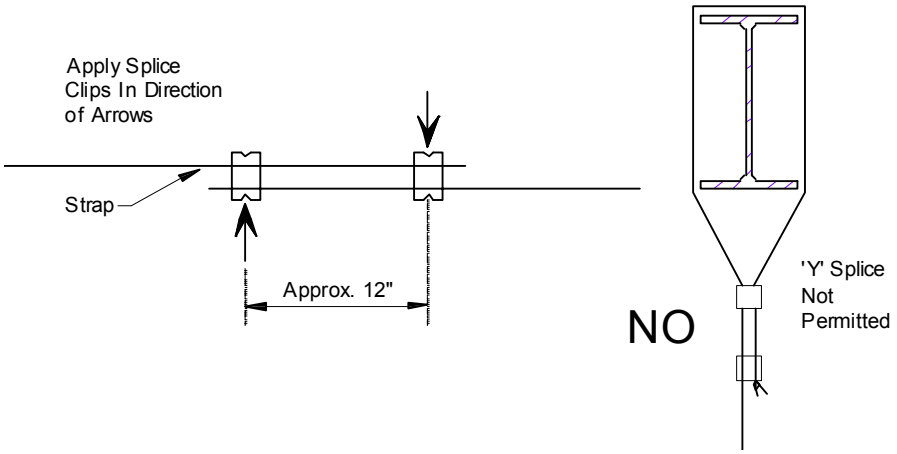

Figure 77. *Tie-down strap splice*

08-21-2009

SIDEWALL FRAME ANCHORS

Install straps to sidewall frame anchors as follows:

1. **Connect strap to home.** Connect one end of the strap to the home connection point using approved buckles or clips (swivel or hook clip preferred).

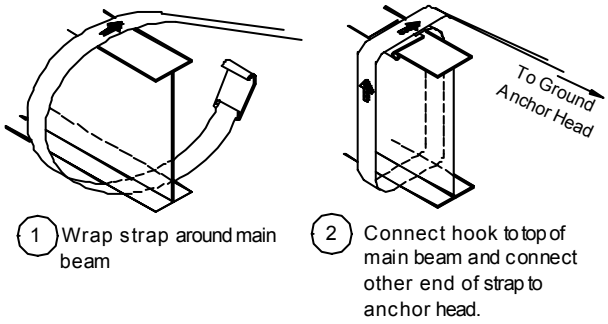

Figure 78. *Strap to beam connection*

Strap to beam connection. Regardless of the strap supplier's recommendations, the strap must be connected to the top of the main beam to prevent damage to the structure.

2. **Connect strap to anchor.** Connect the other end of the strap to the split bolt in the anchor. Leave enough strap length to be able to make at least three, but no more than five complete turns around the bolt before it becomes tight (approximately 2 1/2 inches per turn or 7 1/2 to 13 inches total). Fewer than three turns and the strap may not hold onto the bolt when force is applied. Conversely, more than five turns may not fit within the U-channel of the anchor head. Follow the procedure outlined in **Figure 79**.

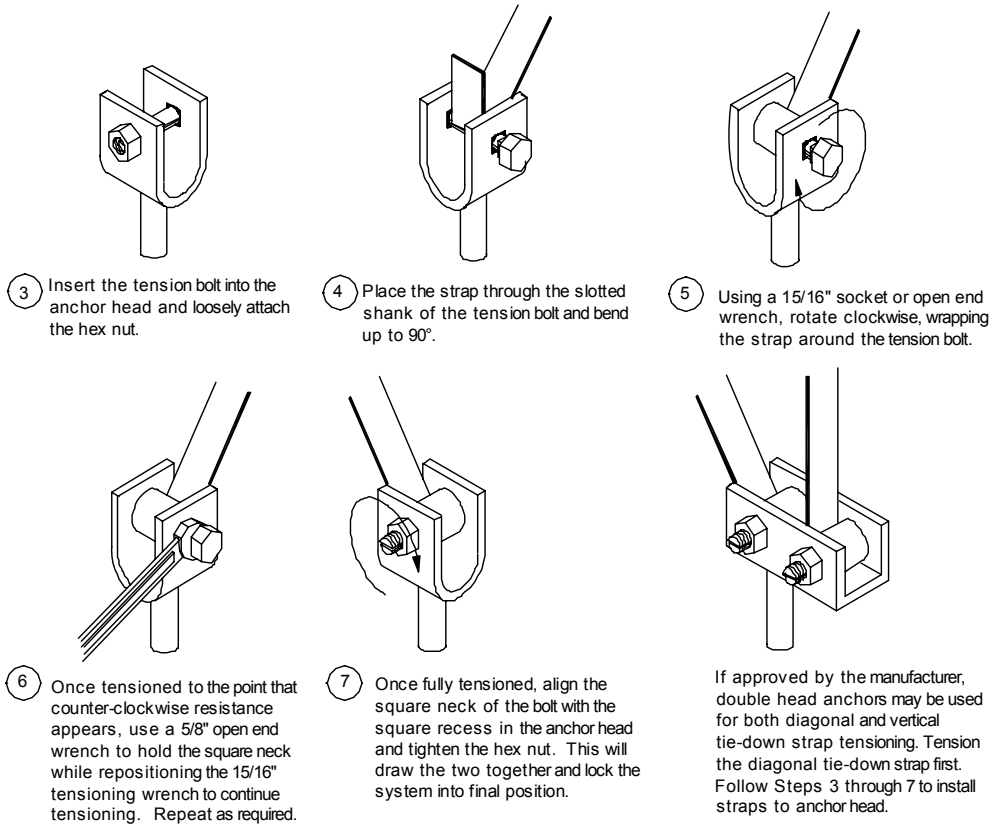

Figure 79. *Procedure for connecting the strap to frame and anchor*

3. **Pretension anchor.** For anchors with stabilizer plates, pretension the anchor by pulling it up to the stabilizer plate using the strap and take-up bolt to move the anchor head. Continue pulling the strap until the plate moves a small amount (about 1/2 inch). This is called packing the plate and it will yield the strongest resistance (the bottom of the anchor head should be maximum 1/4 inch above the top of the stabilizer plate).

Anchor head location. As the anchor is pulled up to meet the stabilizer plate, the head of the anchor will rise. In its final position, the bottom of the anchor head should be no more than 1/4 inch above the top of the stabilizer plate.

END WALL FRAME ANCHORS

Attach straps to the bracket welded by the manufacturer to the frame (**Figure 80**). If no brackets have been installed, use approved beam clamps designed specifically for this purpose, available from anchor suppliers. Connect straps to anchors following same procedure as for sidewall frame anchors.

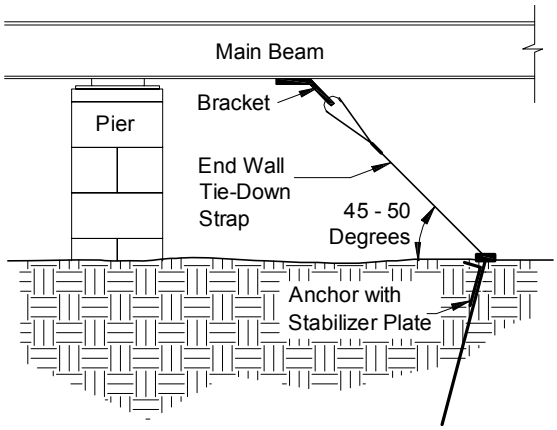

Figure 80. *End wall frame anchor attachment method*

08-21-2009

SIDEWALL VERTICAL ANCHORS

Homes built for Wind Zone II and III have factory-installed brackets along the sidewall. Attach the strap to the bracket as shown in **Figure 81**.

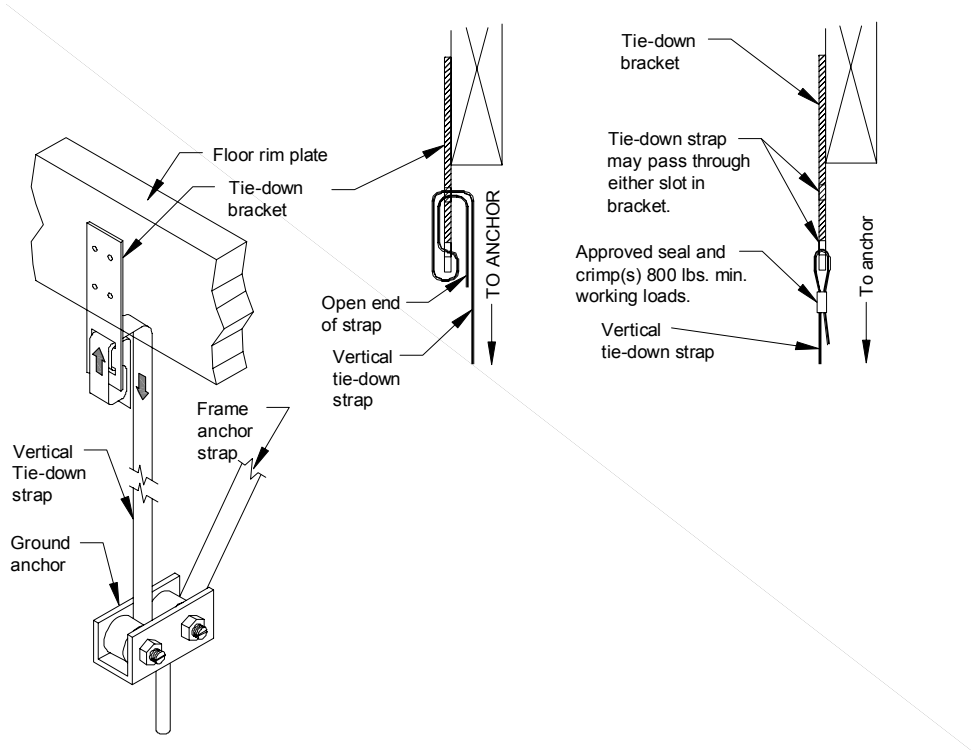

Figure 81. *Connecting Sidewall Vertical Strap to Tie-down Bracket*

08-21-2009

STEP 6. TIGHTEN AND ADJUST STRAPS

After all anchors have been installed and pre-tensioned, recheck all anchor straps to assure that they are tight and that the anchor shafts have remained in contact with the stabilizer plates. Do not over-tension straps.

► go to **Connect Utilities** (p. 79)

Connect Utilities

This chapter contains procedures and requirements for the connection and testing of utility hook-ups. Responsibility for making utility connections varies by location. Consult the LAHJ and the utility before connecting the home to any utilities.

Follow the Steps below:

- **STEP 1. CONNECT ELECTRICAL SERVICE** (p. 79)
- **STEP 2. CONNECT WATER SERVICE** (p. 82)
- **STEP 3. CONNECT GAS SERVICE** (p. 85)
- **STEP 4. CONNECT OIL SERVICE** (p. 86)

STEP 1. CONNECT ELECTRICAL SERVICE

The home is designed for connection to an electrical wiring system rated at 120/240 volt AC. All electrical field work must be done by a licensed electrician or other person approved by the LAHJ.

FEEDER WIRE AND EQUIPMENT SIZES

The current rating (in amperes) of the home can be found on the tag located on the outside next to the feeder or service entrance, and on the electrical distribution panel. Using this information, determine the required feeder wire size from **Table 32**. These sizes are based on an ambient temperature of 86 degrees Fahrenheit and do not take voltage drop into consideration.

Acceptable conductor types are: RHH, RHW, RHW-2, THHN, THHW, THW, THW2, THWN, THWN-2, XHHW, XHHW-2, SE, USE, and USE-2.

TABLE 32. ELECTRICAL FEEDER WIRE AND EQUIPMENT SIZES FOR COPPER CONDUCTORS (ALL WIRE SIZES ARE AWG UNLESS NOTED)

Main Breaker Size in Panel Box (AMPS)	Max. Neutral Feeder Load (AMPS)	Junction box size	Minimum Size Raceway Conduit Diameter (in)	Conductors (Cu)			
				Red & Black (Power)	White (Neutral)	Green (Grounding)	Grounding Electrode Conductor
50	35	NA	1	#4	#8	#10	#8
100	70	10x10x4	1-1/4	#4	#4	#8	#8
150	115	10x12x4	1-1/2	#1	#2	#6	#6
200	140	10x16x4	2	2/0	1/0	#6	#4
225	158	10x16x4	2	3/0	2/0	#4	#4
400	280	10x24x4	3	400 kcmil	300 kcmil	#3	1/0

Special precautions when installing electrical service. Installation of the electric power to the home can cause exposure to live electrical circuits. Exposure to live electrical circuits or improper grounding of the conductor in the panel board may result in severe shock or possible electrocution. A qualified installer must make the connections for the electric power.

FEEDER CONNECTIONS
Feeder connections are made from above or from below the home as follows:

From above – mast weatherhead feeder

The routing, connection, and support of the service drop must meet local codes. Homes equipped this way contain all necessary conduits to the electrical distribution panel. However, the feeder conductors (not provided with the home) are installed on site. If the masthead is located above the roof overhang, allow a minimum clearance of eight feet above all roof points that the conductors pass over. There are two exceptions to this rule: (1) The vertical clearance may be reduced to three feet if the roof has a minimum slope of 4 in 12; and (2) The vertical clearance may be reduced to 18 inches if no more than four feet of service-drop conductors pass above the roof overhang, and if they terminate at a through-the-roof raceway or approved support. A minimum clearance must also be provided from the final grade to the service-drop conductors. This measurement may vary from 10 feet to 18 feet, depending on the types of traffic anticipated below the service drop (refer to the NEC). Unless impractical, locate service heads above the point of attachment of the service-drop conductors and make them rain-tight. If individual conductors do not extend downward, form drip loops.

From below – underside junction box feeder

A section of conduit is factory installed through the floor cavity. Connect to that conduit with approved fittings and conduit (not provided with the home) to the point where the service entrance cable enters the crawl space. Install properly-sized service entrance conductors from the main power supply to the panel board. Depending on the location of the main panel board inside the home, or the point at which the service entrance conductors enter the crawl space, a separate service disconnect may be required. Refer to **Table 32** for the conductor and junction box requirements. The installer must provide the supply connection including the feeder conductors, junction box, and conduit connectors. Protect conductors emerging from the ground from a minimum of 18 inches below grade to eight feet above grade, or to the point of entrance to the home. The distance measured from the top surface of a buried cable, conduit, or raceway to the finished grade must meet the minimum burial requirements outlined in the NEC. Use a moisture-proof bushing at the end of the conduit from which the buried cable emerges.

Power supply. A large enough power supply must be available at the site. An inadequate power supply may result in improper operation of and possible damage to motors and appliances. It may also increase electricity costs.

GROUNDING
The home must be properly grounded to protect the occupants. The only safe and approved method of grounding the home is through an electrically-isolated grounding bar in the manufactured home distribution panel board. This grounds all non-current-carrying metal parts to the electrical system in the home at a single point.

Each neutral conductor must be connected to the system grounding conductor on the supply side of the main disconnect in accordance with Articles 250.24, 250.26, and 250.28 of the National Electrical Code, NFPA No. 70-2005.

Where the meter base has a disconnect (typically when the meter is more than 6 feet from the service electric panel, although this may vary by LAHJ), the ground and neutral should be bonded at that disconnect and then grounded to the driven earth ground. Four wires will leave the service electric panel to the disconnect. Three wires will enter the disconnect from the meter base (refer to **Figure 82**).

Where there is no disconnect on the meter base or between the meter base and service electric panel (typically when the meter is within 6 feet from the service electric panel, although this may vary by LAHJ), the main circuit breaker in the service electric panel becomes the first disconnect. In this case, the neutral and ground are bonded in the service electric panel and connected to the driven earth ground from the service electric panel. Three wires lead between the meter base and the service electric panel (refer to **Figure 83**).

Grounding the electrical system. Do not provide electrical power until the grounding electrode is installed and connected. When the meter base is not on the house never use the neutral conductor of the feeder cable as a ground wire.

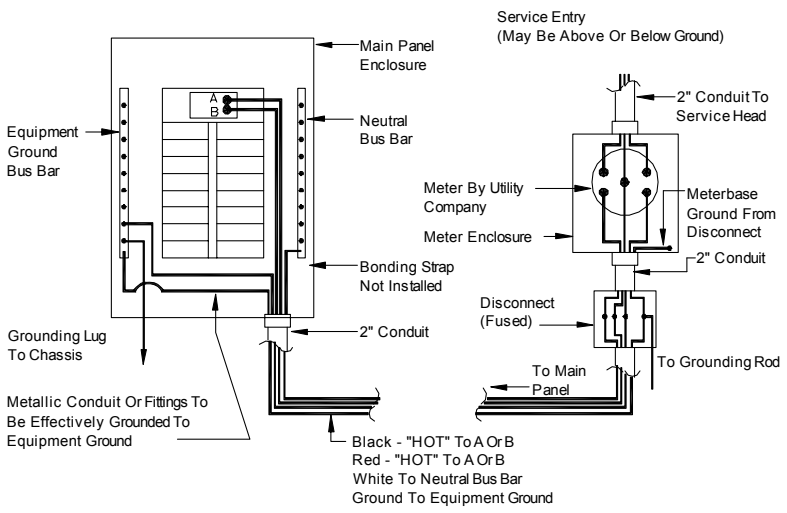

Figure 82. *Electrical feeder connection when meter has a disconnect installed (typically more than 6 feet from service electric panel).*

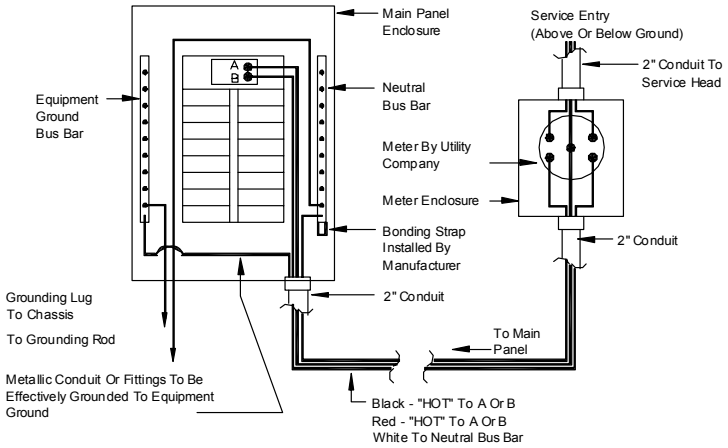

Figure 83. *Meter base wiring when there is no separate disconnect installed (typically within 6 feet of service electric panel).*

In all cases, a grounding electrode conductor and a ground wire must be installed according to the following specifications:

1. Grounding wire to be per **Table 32** provided by the manufacturer. If manufacturer provides a minimum 1/2 inch EMT or conduit raceway, the #6 minimum bare copper wire is provided by the retailer for installation.
2. The clamp connecting the grounding electrode conductor to the electrode shall be suitable for direct burial and located flush or below ground level.
3. Use a listed 5/8 inch diameter by eight foot long iron electrode or nonferrous rod of at least 1/2 inch diameter by eight feet long for grounding (larger sizes may be required by the LAHJ due to soil impedance).
4. Drive the electrode to a depth of not less than eight feet so that at least eight feet of the electrode is in contact with the soil.
5. When rock is encountered, the electrode may be driven at an angle not to exceed 45 degrees from vertical or buried in a trench that is at least 2-1/2 feet deep.

FIELD INSTALLED METER BASE

When a meter base is installed in the field, **Figure 84** and the following requirements must be adhered to:

- Install the meter base according to the manufacturer's instructions.
- Use straps to support any conduit. Do not use the meter base equipment for

support.

- Use exterior equipment and enclosures listed as weatherproof and entrance conductors listed for wet locations.
- The grounding bar may be installed separate from the neutral bar for purposes of testing the electrical system.
- The grounding bar may be isolated during the electrical check and re-attached, after the tests are completed.
- Check with the local electrical utility to verify meter base requirements and locations and distances for the main panel and meter box.
- The field installed meter base enclosure must be installed in accordance with its listing. Fasten securely to exterior wall studs and provide for a weather-tight seal.
- Check the local code for any requirements regarding the location of the meter base.
- Final testing of the electrical system should not be performed until all appliances are connected. See **Prepare Appliances and Equipment** (p. 88) for electrical system test procedures.

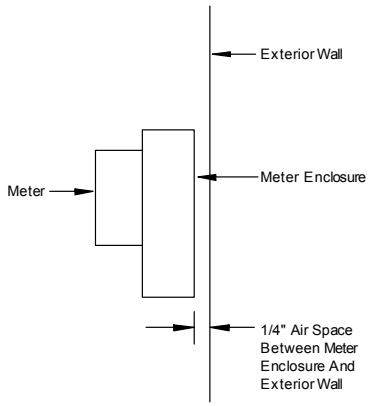

Figure 84. *Meter base clearances.*

STEP 2. CONNECT WATER SERVICE

CONNECTION

To connect the home's water system to the water source, identify the water inlet located under the home (usually below the water heater compartment or utility room) and follow the procedure described below (refer to **Figure 85**):

1. **Flush pipe.** Flush field-installed water piping free of all debris prior to connection to the home's water inlet.
2. **Clean threads.** Ensure that pipe threads are clean.
3. **Install pressure-reducing valve.** If the local water supply exceeds 80 psi install a pressure-reducing valve.
4. **Connect valve.** Install a main shut-off valve between the water supply and the inlet on the home. Locate the riser for the shutoff valve underneath or adjacent to the home. Select a full flow gate or ball shutoff valve, or equivalent valve. To prevent the possibility of fresh water contamination install an anti-siphon valve on all field installed exterior faucets.

Selecting heat tape. Use only pipe-heating cable (tape) listed for manufactured homes and install it in accordance with the cable (tape) manufacturer's installation instructions.

Maximum water pressure. The water system for the home was designed for a maximum inlet pressure of 80 psi.

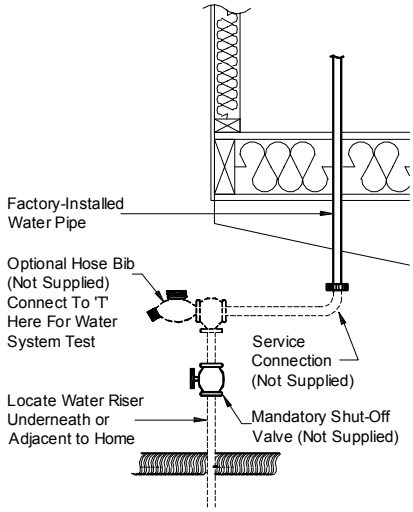

Figure 85. *Water system connection*

5. **Install water heater discharge drain.** Inspect the drain opening on the water heater to ensure that it is clear of any obstruction. If the home is to be installed on a basement or enclosed crawlspace, install drain pipe connecting the discharge from the water heater temperature and pressure relief valve to the outside or to a sump.
6. **Install water heater drip pan drain.** Assure that the drain for the water heater drip pan does not terminate under the home. Using the materials provided and the accompanying instructions run a drain line from the water heater drip pan through the wall or floor to the exterior of the crawl space. Terminate the line between six and 24 inches above grade. (**Figure 86**). Make the termination point rodent proof.

Using check valves. Install a check valve on the water inlet to prevent water system drainage in the event of a loss of water pressure from the source. Such pressure loss could cause the water heater to drain, exposing the heating elements of electric water heaters causing them to fail.

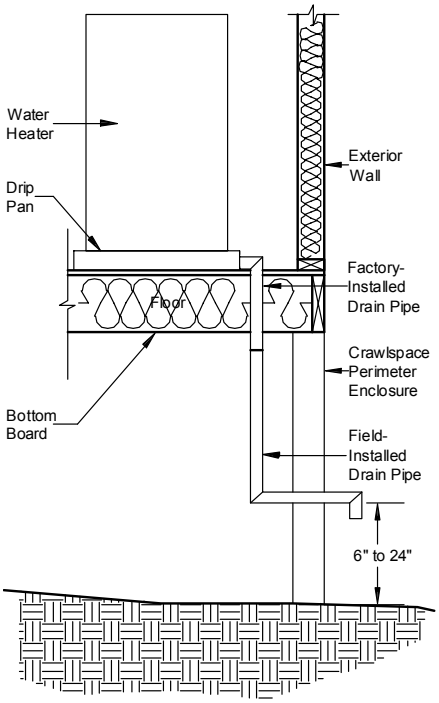

Figure 86. *Water heater drip pan and drain*

7. **Insulate.** In areas subject to freezing temperatures, protect with insulation or heat tape pipes, valves and pressure reducers that are exposed to the outdoors; and pipes in water heater compartments with non-insulated doors. Connect heat tape to the electrical outlet under the home near the water supply inlet.

TESTING

After connecting the water lines check the water system for leaks using one of the procedures described below. Before testing, close all water faucets, spigots, and toilet-tank float valves.

Hydrostatic (preferred):

1. **Bypass water heater.** Bypass the hot water heater by disconnecting the hot outlet and cold inlet water lines from the water heater and joining them together. This will protect the hot water tank from damage and protect those involved in the test from possible injury.
2. **Pressurize system.** Connect a hydrostatic pump, valve, and gauge to the location shown in **Figure 85**. Pressurize the system with water at 100 psi, and then isolate it from the pressure source. Bleed all air from the highest and farthest points in the system.
3. **Hold pressure.** Monitor the pressure for at least 15 minutes.
4. **Fix leaks.** If the pressure drops below 100 psi, locate and correct any leaks by cutting out and discarding bad pipe sections or joints and installing new pipe or joints with couplings.
5. **Repeat.** Repeat the test until all leaks have been eliminated.

Pneumatic:

1. **Bypass water heater.** Bypass the hot water heater by disconnecting the hot outlet and cold inlet water lines from the water heater and joining them together. This will protect the hot water tank from damage and protect those involved in the test from possible injury.
2. **Pressurize system.** Connect an air pump and pressure gauge to the water inlet, pressurize the system to 100 psi and isolate the pressure source from the system.
3. **Hold pressure.** Monitor the pressure for least 15 minutes. If the pressure drops below 100 psi, locate any leaks by applying soapy water to the connections and looking for bubbles.
4. **Fix leaks.** Correct any leaks by cutting out and discarding bad pipe sections or joints and installing new pipe or joints with couplings.
5. **Retest.** Repeat the procedure until all leaks have been eliminated.
6. **Restore connections.** Reconnect the water heater and the water supply.

FREEZE PROTECTION FOR UNOCCUPIED HOMES

If the home is to be left unheated in cold weather, protect water lines from freezing as follows:

1. **Disconnect supply.** Turn off the water supply at the main water supply shut-off valve and disconnect the water supply inlet.
2. **Drain water heater.** Turn off the water heater; if necessary, attach a hose to the drain valve to direct water away from under the home, open the drain valve and drain the tank completely.
3. **Drain faucets.** Open all faucets throughout the home (including the laundry area if plumbed, and any exterior faucets) and let them drain completely.
4. **Drain toilets.** Flush toilets and drain water tanks completely.
5. **Close faucets.** Close all water faucets with the exception of one.
6. **Connect compressor.** Connect a maximum of 30 psi air supply to the water inlet connection using a low pressure compressor.
7. **Open faucets.** With the air supply on the system, open one faucet at a time throughout the home.
8. **Disconnect compressor.** After the entire system has been drained of all

Selecting heat tape. Use only pipe-heating cable (tape) listed for manufactured homes and install it in accordance with the cable (tape) manufacturer installation instructions.

Testing water lines. Only use pneumatic (air) testing when hydrostatic testing is not practical. Air under pressure is explosive. Exercise extreme caution and notify all site personnel of the test. Wear protective eyewear and take precautions to prevent impact damage to the system while the test is in progress. Do not pneumatically test CPVC systems. Pneumatically test Flow Guard Gold systems only at low pressure levels (20 psi or less).

Pressurizing water lines. When pressurizing the water system, connect the pump to a location above a closed shut-off valve so as not to introduce pressure into the municipal water supply.

water, disconnect the air supply and close the water inlet valve.

9. **Pour anti-freeze.** Pour an antifreeze solution into all drain traps, including sinks, tubs, and toilets. Be sure that the antifreeze is safe for the fixtures and P-traps.

STEP 3. CONNECT GAS SERVICE

CONNECTION

If the home uses natural or liquid petroleum gas (LPG, also known as propane) for water or space heating, cooking or other appliances, follow the procedure described below:

1. **Inspect vents.** Assure that all exhaust vents on gas-fired equipment are securely connected and that roof jacks and stacks have not come loose during transit and they are properly installed.
2. **Review appliance instructions.** Review each appliance manufacturer's instructions before the home is connected to the gas supply. Most gas appliances are typically configured to operate on natural gas. If the gas supply will be LPG, consult the appliance manufacturer's instructions to determine what changes need to be made. For homes located above 2,000 feet, appliances may require a different orifice.
3. **Remove cap.** Remove the protective cap from home inlet pipe and install a full flow shut-off valve at the supply inlet (**Figure 87**).
4. **Install regulator.** The gas piping system is designed for a pressure that is at least seven inches of water column (4 oz. per sq in or 0.25 psi) but not more than 14 inches of water column (8 oz. per sq in or 0.5 psi). If gas from any supply source exceeds, or could exceed this pressure, install a regulator if required by the LAHJ.
5. **Connect supply.** Using matching threaded fittings, connect the gas supply to the inlet side of the shut-off valve.
6. **Close valves.** Close all valves at appliances prior to opening the main supply valve.

Installing gas lines. Only qualified professionals may connect and test gas service.

Derated fuel. Gas utilities in high altitude areas may have already compensated the fuel to provide a clean burn at high altitudes. If the fuel has been derated, do not change the orifice for the appliances. Check with the local gas utility for specific directions.

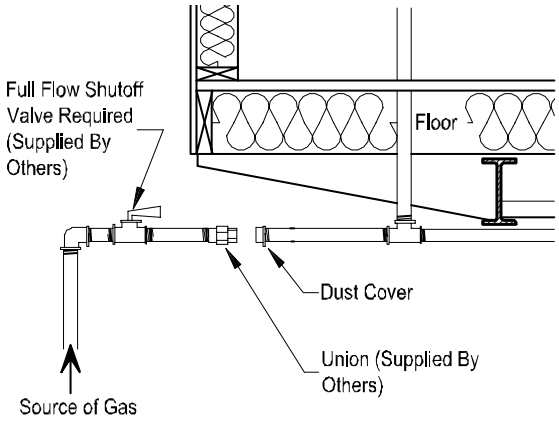

Figure 87. *Gas service connection*

TESTING

Test the gas piping system in the following two ways: 1) piping only and 2) entire system. Consult with the LAHJ for any additional testing or start-up requirements.

Before testing is begun, the temperature of the ambient air and the piping should be approximately the same. Conduct the tests when and where air temperatures will remain constant.

Piping only test (all appliances isolated)

1. **Isolate appliances.** Isolate all appliances from the system by closing all appliance shut-off valves.
2. **Attach gauge.** Attach to the home's gas inlet a mercury manometer or slope gauge calibrated in increments of not more than 1/10 lb.

Fill gas water heaters. Before lighting the pilot on a gas powered water heater, fill the tank with water. Failure to do so could damage the water heater.

3. **Pressurize system.** Using an air compressor, pressurize the system with compressed air to three psi and isolate the pressure source from the system.
4. **Monitor pressure.** Monitor the pressure for at least 10 minutes.
5. **Check for leaks.** If pressure drops below three psi, check for leaks by applying a non-corrosive, ammonia-free gas leak detection fluid to the joints at all valves, appliance connections, and crossover connections (do not use dish washing detergents, soap, or other household chemicals). If bubbles form, tighten the connection and recheck.
6. **Repair leaks.** If leaks persist, replace defective pipes or fittings with sound material and retest.
7. **Release pressure.** Release pressure and open all appliance shut-off valves.
8. **Rinse connections.** Thoroughly rinse all tested connections with water to remove leak detection fluid.

Entire system test (with appliances)

1. **Close appliances.** Close all gas equipment controls and pilot light valves according to the individual gas equipment manufacturer's instructions.
2. **Open valves.** Assure that gas shut-off valves for all gas equipment are in the open position.
3. **Attach gauge.** Attach to the home's gas inlet a pressure gauge calibrated in ounces.
4. **Pressurize system.** Pressurize the system with compressed air to six to eight ounces (3/8 to 1/2 psi, or 10 to 14 inches of water column).
5. **Check for leaks.** Check for leaks as described above in step 4 of the Piping only test. Replace defective pipes or fittings with sound material and re-test.
6. **Rinse connections.** Thoroughly rinse all tested connections with water to remove leak detection fluid.

GAS APPLIANCE START-UP

Open the shut-off valve for each appliance and adjust the burners according to the appliance manufacturer's instructions. Verify that the furnace and water heater thermostats are operating properly and set them to the desired temperatures.

STEP 4. CONNECT OIL SERVICE

Homes that are equipped with oil burning furnaces must have oil supply piping installed and tested on site by a qualified professional in accordance with NFPA 31, Standard for the Installation of Oil Burning Equipment, 2001 or the requirements of the LAHJ, whichever is more stringent. The home manufacturer does not supply oil piping or tanks.

Testing oil tanks. All oil storage tank and piping installations and tests must meet all applicable local regulations and should be made only by experienced, qualified personnel.

OIL CONNECTION

Consult the furnace manufacturer's instructions for proper pipe-sizing and installation procedures. Where piping is run through the bottom of the home, ensure all holes in the bottom board are sealed tight with foam, mastic, and/or tape specially made for that purpose and made rodent proof.

When equipping the home with an oil storage tank, comply with the following:

- Install the pipe with a gradual slope toward the fill end or drain plug (if so equipped) to facilitate pumping or draining of water and sludge.
- Provide a readily accessible approved manual shut-off valve at the outlet, installed to close against the supply.
- Equip the tank with an approved oil filter or strainer located downstream from the tank shut-off valve. Use a filter or strainer containing a sump with a drain to trap water.
- Equip under ground tanks with a filler neck extending one foot above grade and a minimum 1-1/4 inch diameter vent pipe extending at least two feet above grade.
- Locate the tank to be accessible for service and inspection, and safe from fire and other hazards.

- If the tank is located inside a compartment of the home, provide ventilation at the bottom of the compartment to permit diffusion of vapors. If the tank is fixed to the home, provide for filling and draining from the outside.
- Insulate interior tanks from the structural members of the home. Provide tanks so installed with an outside fill and vent pipe and an approved liquid level gauge.
- Install tanks that feed vaporizing type oil furnaces so that oil flows by gravity. To achieve efficient gravity flow, make sure that the bottom of the tank is at least 18 inches above the furnace oil control level.
- Tanks for gun type oil furnaces (these furnaces include a fuel pump) may be installed above or below ground.

OIL SYSTEM TESTING

Before operating the system, fill the tank to capacity with the fuel to be burned and visually check all joints in the system for leakage. Replace (do not repair) parts that leak.

► go to **Prepare Appliances and Equipment** (p. 88)

Prepare Appliances and Equipment

This chapter provides instructions for installing and/or preparing appliances and other equipment. While the items below can be completed in any order, the last item, **CONDUCT ELECTRICAL TEST,** must be done last.

Follow the Steps below:

- **INSTALL AIR CONDITIONER OR HEAT PUMP** (p. 88)
- **PREPARE HEATING SYSTEM** (p. 89)
- **INSTALL REMOTE HEATING AND COOLING EQUIPMENT** (p. 89)
- **PREPARE VENTILATION SYSTEM** (p. 90)
- **PREPARE FUEL-BURNING APPLIANCES** (p. 90)
- **PREPARE SMOKE ALARMS** (p. 92)
- **PREPARE FIREPLACE** (p. 92)
- **PREPARE KITCHEN AND BATH APPLIANCES / FIXTURES** (p. 94)
- **INSTALL EXTERIOR LIGHTING** (p. 95)
- **INSTALL CEILING FANS AND LIGHTING** (p. 95)
- **TEST ELECTRICAL SYSTEM** (p. 96)

INSTALL AIR CONDITIONER OR HEAT PUMP (if applicable)

CENTRAL UNITS

Install split system or unitary central air conditioners and/or heat pumps as follows:

1. **Check suitability.** Check the home's Comfort Cooling Certificate (may be included with the data plate) to confirm that the home is suitable for installation of central air. If so, note the air distribution system's rated duct capacity (BTU/hr), any equipment sizing guidance provided by the manufacturer and information provided to calculate the home's heat gain.
2. **Select equipment.** Select equipment with a rated heating capacity (BTU/hr) not exceeding the maximum indicated on the home's data plate and a rated cooling capacity sized in accordance with Chapter 28 of the 1997 ASHRAE Handbook of Fundamentals or ACCA Manual J, Residential Cooling Load, 8th edition. Information needed to calculate the home's heat gain can be found on the home's comfort cooling certificate. Choose equipment with a minimum circuit amperage (found on the equipment rating plate) no greater than the branch circuit rating of the exterior air conditioning receptacle (indicated on the adjacent tag), if present.
3. **Install A-coil.** When installing a cooling A-coil in a down-flow furnace that incorporates a fresh air intake duct, position the duct in the furnace cavity according to the furnace manufacturer's instructions.

Use listed appliances. All applicable appliances must be listed or certified by a nationally recognized testing agency for the application for which the unit is intended and installed in accordance with the terms of its listing or certification.

Properly sizing equipment. Oversized cooling equipment can lower energy efficiency, reduce comfort, shorten equipment life, and may cause moisture problems in the home (including potentially damaging the home's structure). Sizing guidance is provided by the Manufactured Housing Research Alliance Cooling Equipment Sizing

Guidelines available at www.mhrahome.org.

Selecting A-coils. Use only A-coil units compatible and listed for use with the furnace in the home and installed in accordance with the furnace manufacturer's instructions.

Installing flue stacks with a hinged roof. If flue stack components are installed above the finish roof line (as is often the case with hinged roofs), an Alternative Construction letter is normally required along with a follow-up inspection. Contact the factory for guidance.

Venting appliances to the outside. Vent to the exterior of the home all combustion appliances except ranges and ovens.

Selecting ducts. Exterior ductwork for remote units must be provided by the installer or HVAC contractor. Ducts must be approved for exterior installation and should be wrapped with insulation of at least R-4 under a vapor barrier with a perm rating of not greater than one. (For ENERGY STAR homes, the R-value must be at least that specified on the manufacturer's ENERGY STAR Site Installation Checklist—generally a minimum of R-6 or R-8.)

PREPARE HEATING SYSTEM

If the home does not contain a factory installed heating appliance, install a remote heating appliance according to **INSTALL REMOTE HEATING AND COOLING EQUIPMENT**, p. 89. Prepare fuel-burning heating systems included with the home as follows:

1. **Inspect for damage.** Inspect the furnace and report any damage to the home manufacturer.
2. **High altitude.** If the home is located more than 2,000 feet above sea level or as indicated in the furnace manufacturer's instructions, derate gas furnaces 4% for each 1,000 feet above sea level. This work must be done by a qualified (and in some jurisdictions, licensed) technician.
3. **Convert for LPG gas.** If LPG gas (propane) will be used, convert the appliance from natural gas to LPG gas use. Conversion must be made by a qualified and (if required by the LAHJ) licensed technician.
4. **Install intake air pipe.** Consult the appliance manufacturer's instructions for maximum allowable pipe run length, requirements for air dampers, locations relative to expected snow levels (check with the LAHJ for expected snow levels), acceptable materials, pipe supports, and pipe termination requirements.
5. **Install flue.** For combustion appliances, install the flue roof cap and stack assembly as described in **PREPARE FIREPLACES, Chimneys** (p. 92).

INSTALL REMOTE HEATING AND COOLING EQUIPMENT

Install remote units in compliance with all heating and cooling equipment requirements in this chapter above and the following:

1. **Locate connections to the home.** Find the manufacturer-installed connectors, labels, or tags under the home indicating the required connection points for supply and return air. If connectors are not provided nor location indicated, select a supply duct location such that there are approximately equal numbers of supply registers forward and rear of the connection point. Locate the return duct in the center of the home.
2. **Install ducts.** Install the appropriate supply and return ducts (not provided) between the remote unit and the home (**Figure 89**), making connections according to the instructions for crossover ducts in **Crossover Connections** (p. 58).
3. **Install dampers.** If installing a remote cooling unit in a home with a factory installed furnace, install dampers between the furnace and the home's air duct system, and between the remote unit and the home's air duct system to prevent warm air in heating mode from escaping to the remote cooling unit and vice versa.
4. **Connect wiring.** Install a thermostat containing a fan switch. Connect utilities in accordance with all manufacturer's instructions and local codes.
5. **Seal penetrations.** Repair or replace all floor insulation disturbed during the duct installation and seal holes in the bottom board using foam, mastic, or tape specially made for that purpose.

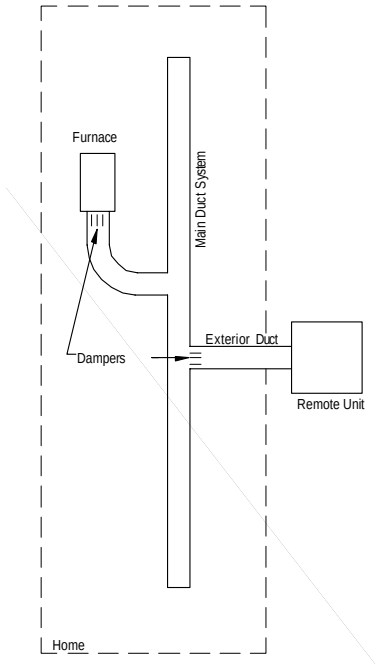

Figure 88. *Remote unit damper locations*

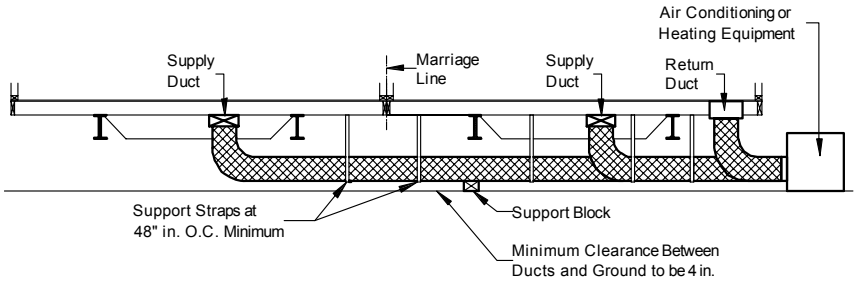

Figure 89. *Ducts connecting exterior heating and/or cooling equipment to the home*

PREPARE VENTILATION SYSTEM

Prepare the whole-house ventilation system according to the ventilation system manufacturer's instructions. Confirm that any fresh air intake ducts extend to the exterior and do not draw air from the crawlspace under the home. Do not allow any fresh air ventilation intake ducts to become kinked or restricted, forming a trap (**Figure 89**).

PREPARE FUEL-BURNING APPLIANCES

WATER HEATER

The water heater discharge and drip pan drains should have been installed in **Connect Utilities** (p. 82).

In homes with direct-vent water heaters (that utilize gas, oil, or other combustion fuel), and where the water heater is not independently vented to the exterior through a grilled opening, provide combustion air either – 1) from outside the home and through the skirting, or 2) through the roof via a double-walled flue pipe. Providing air from the outside may be accomplished with either of two methods:

a. Using a combination air duct system that is listed for use with the water heater installed in the home and installed in accordance with the instructions provided, or

b. Using the termination through the floor as constructed in the factory. The installation instructions for the water heater must allow this method, the termination must be free of any obstructions such as brush, and the ventilation through the skirting must provide a minimum of one square inch for every 4000 Btuh rating of the water heater or a minimum of 15 square inches.

Choosing pipe lengths. The appliance manufacturer may designate the length of the pipe run based on the pipe diameter and the number of turns in the pipe run.

Venting exhaust systems. Exhaust vents must extend to the home's exterior through skirting. Termination of the dryer exhaust underneath the home can cause condensation and moisture damage to the home. Lint and dust accumulation can ignite, causing a fire. The exhaust system must not contain reverse slope.

DRYER VENTS

If the home includes a clothes dryer, the components for ventilating the dryer are included with the home (but not necessarily installed) and a vent opening has been roughed in either in the wall or floor. (If a dryer is not installed, seal all dryer vent openings).

Run the dryer vent to the outside through the exterior wall or through the floor to a point beyond the perimeter of the home, using materials approved by the clothes dryer manufacturer (see **Figure 90**).

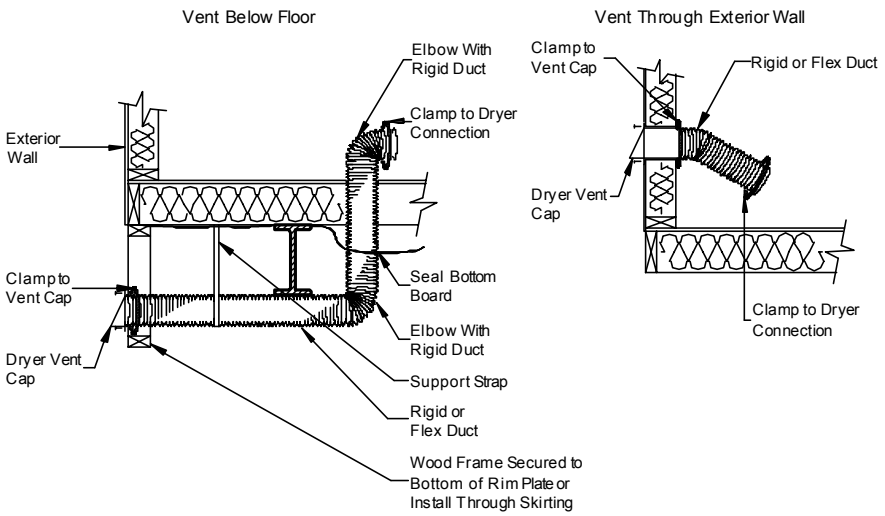

Figure 90. *Clothes dryer ventilation ductwork through floor (left) or exterior wall (right)*

Install the vent as follows:

1. **Remove temporary caps.** Remove any temporary seals and duct caps from the vent rough openings.
2. **Install ductwork.** Install ductwork using clamps (do not use screws or other fasteners that penetrate into the duct) and support the duct with metal straps connected to the floor joists or chassis at two feet o.c. or less. Ensure duct connections are internally overlapped to prevent inhibiting the flow of air and thereby causing lint accumulation.
3. **Install cap and damper.** Install an approved dryer vent cap with damper on the exterior termination of the duct. If the vent terminates at skirting, secure the cap to framing or skirting with sheet metal screws and seal edges with caulk or sealant. If the vent terminates through a wall, apply a bead of sealant to the back of the cap around the opening and secure with sheet metal screws to metal, hardboard or fiber cement siding or with wood screws to a mount block for vinyl siding.
4. **Seal opening.** Seal openings inside and outside of the home including at the floor, interior walls, siding and skirting (with caulk), and at the bottom board using foam, mastic and/or tape specially made for that purpose.

GAS DRYERS

If the home was not fitted for a gas dryer, installing one requires substantial alteration to the home. Gas supply piping and adequate venting must be provided as specified by the dryer manufacturer and installed by a trained professional. Do not cut major structural elements to accommodate a gas dryer.

Avoid damaging structural elements. Do not cut or otherwise damage structural elements such as floor joists or wall studs for the installation of the dryer exhaust system.

Gas. Ventilation components that may be included with the home for an electric dryer may not be acceptable for gas dryers. Consult the gas dryer manufacturer instructions.

Installing ducts. Keep ductwork straight and smooth as possible without excess slack. Slope it slightly downward towards the exterior to facilitate moisture drainage.

PREPARE SMOKE ALARMS

The home has several factory installed smoke alarms that are wired to a 120-volt circuit. If the home was designed for placement on a basement, an additional alarm is provided for installation at a pre-wired location under the home. Connect the basement smoke alarm to its circuit and test all alarms as follows:

1. **Check circuit.** Ensure that electrical power to the home is activated and that the smoke alarm circuit is on. A green light illuminated on the cover of the alarm indicates the alarm has 120V power.
2. **Test alarms with AC Power.** Verify that backup batteries are installed and any protective tabs have been removed. Press the test button on each alarm sequentially. All alarms should sound simultaneously when the test button on any one smoke alarm is pressed. Replace any alarms that do not sound with the same brand as those installed elsewhere in the home and retest.
3. **Test alarms with DC Power.** Disconnect the alarms from the AC power source (trip the appropriate breaker in the panel box). Repeat the testing in step 2 for every alarm. If any alarm emits a periodic “chirping” sound this indicates that the batteries for that alarm should be replaced.
4. **Restore power.** Reconnect the alarms to the AC power source by switching on the appropriate breaker.

PREPARE FIREPLACES

Install chimneys, chimney flashing and roofing, fireplace combustion air inlets, and hearths according to the manufacturer’s instructions and the procedures described below.

CHIMNEYS

Fireplace and wood stoves may require on-site installation of additional sections of approved chimney pipe, a spark arrestor, and a rain cap assembly. Follow the manufacturer’s instructions and the procedures described below:

1. **Remove coverings.** Remove protective materials covering the roof flashing and any foreign material from the installed part of the chimney.
2. **Install chimney pipe.** Assemble and seal the chimney per the fireplace or wood stove manufacturer’s installation instructions and if there is a conflict between the instructions and the figure, follow the instructions. To assure sufficient draft for proper operation, extend the chimney at least three feet above the highest point where it penetrates the roof and at least two feet higher than any surface within 10 feet of the chimney (**Figure 92**). Use additional section(s) of chimney pipe (not provided) if required by local code or if the site has obstructions within 10 feet of the chimney.
3. **Install shingles.** Install shingles up to the edge of the flue cut-out in the roof deck. Secure shingles installed under the roof flashing with asphalt cement.
4. **Install flashing.** Place flashing over pipe section and shingles and set in asphalt cement. Secure flashing to roof deck at top two corners with roofing nails.
5. **Complete shingles.** Cut shingles in successive courses to fit around the pipe and embed them in asphalt cement where they overlap the flashing. Secure shingles with roofing nails through flashing and apply asphalt cement over nail heads. The completed installation should appear as shown in **Figure 93**, with the lower part of the flange overlapping the lower shingles and the side and upper shingles overlapping the flange.

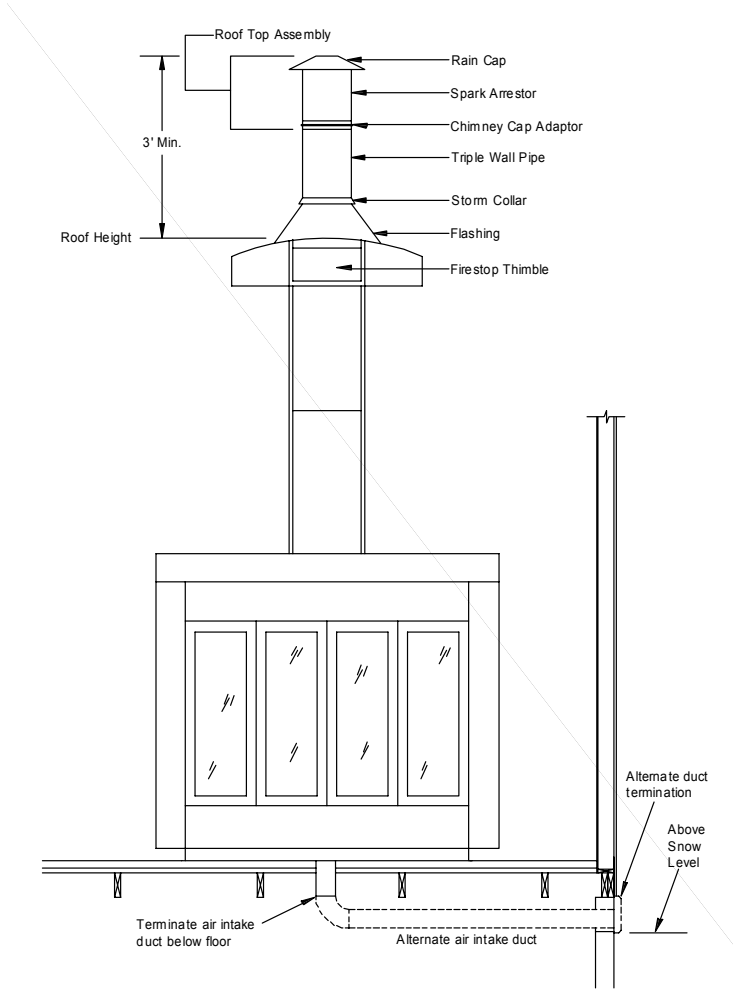

Figure 91. *Chimney and combustion air intake duct installation*

Selecting the appropriate flue. Wood fireplaces use larger diameter flues than gas fireplaces. Make sure flue matches the appliance type. Gas fireplaces cannot burn wood because the flue is too small and smoke will back up into the home. If wood fireplaces are converted to gas the flue will be too large resulting in excessive heat loss through the chimney.

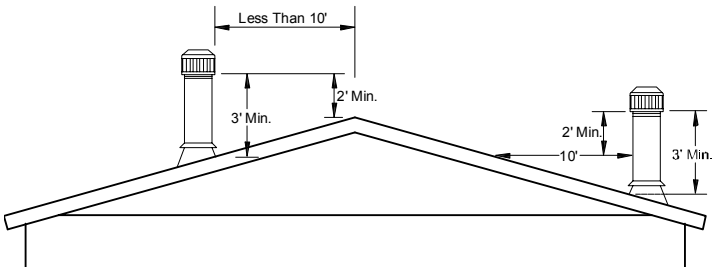

Figure 92. *Chimney clearance*

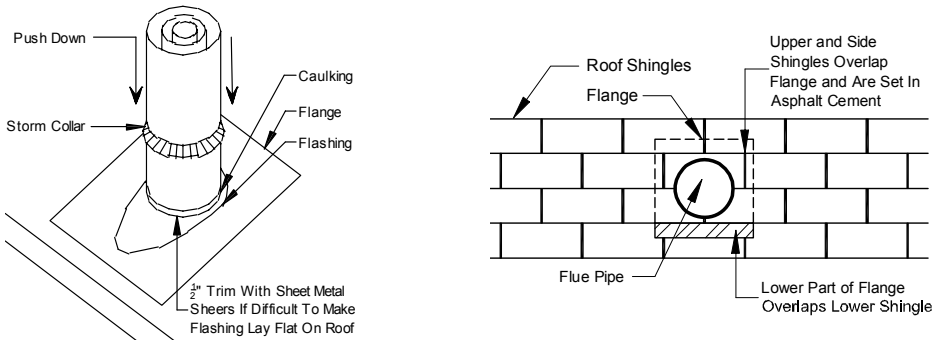

Figure 93. *Roof flashing and shingle installation around chimney*

COMBUSTION AIR INLETS
Combustion air inlets provide combustion air through the floor or an exterior wall to a combustion appliance. If through an exterior wall, site installation is not required. If through the floor combustion air must be provided from outside the home and through the skirting. This may be accomplished using either of two methods:

a. Using a combustion air duct system, as shown in **Figure 91**, that is listed for use with the fireplace provided with the home and installed in accordance with the instructions provided, or

b. Using the termination through the floor as constructed in the factory. The installation instructions for the fireplace must allow this method, the termination must be free from any obstruction, such as brush, and the ventilation through the skirting must provide a minimum of one square inch for every 4000 Btuh rating of the fireplace or a minimum of 15 square inches.

Locate the inlet damper above expected snow levels. (Contact the LAHJ for snow levels).

Follow the fireplace manufacturer's instructions in all cases (typically in the fireplace/stove or with the chimney parts).

HEARTHS
If shipped loose, install the fireplace hearth according to the fireplace manufacturer's instructions.

Installing combustion air inlets. Do not install the combustion air inlet such that material from the hearth can drop beneath the home.

PREPARE KITCHEN AND BATH APPLIANCES / FIXTURES

Install kitchen and bath appliances according to the manufacturer's instructions and the procedures described for each appliance below.

COOKING APPLIANCES
If the home is provided with a range, cook top and/or grill containing its own exhaust system that penetrates the floor, complete the exhaust system as follows:

1. Remove covers. Remove the cover on the factory-installed exhaust pipe protruding from beneath the floor near the appliance.
2. Install termination fitting. Secure the provided termination fitting at the outside edge of the floor.
3. Install duct. Use the provided flexible metallic duct to connect the elbow protruding from the floor and the termination fitting. Refer to the manufacturer's installation instructions for guidance on supporting the duct and making the connections.

Installing exhaust ducts. Route exhaust ducts so they do not terminate beneath the home.

SITE-INSTALLED GAS APPLIANCES
Install only appliances with a Btu capacity equivalent to or less than the capacity of the factory-installed piping and at the location of a factory-installed gas riser.

REFRIGERATOR
Prepare the refrigerator as follows:

- Remove straps, blocks, or other securement devices used for shipping and patch any resulting marks on floors or walls.
- If the refrigerator has an icemaker, check water lines for leaks upon installation and a few days later to make sure no leaks have developed.

SITE-INSTALLED APPLIANCES AND FIXTURES
If sinks, tubs, showers or other fixtures or appliances are to be site-installed, follow the manufacturer's installation instructions. Use only products listed for use in manufactured homes and follow all applicable local codes.

INSTALL EXTERIOR LIGHTING

Install exterior lighting according to **Figure 94** and the following:

1. **Remove cover.** Remove the screws and cover from electrical junction box.
2. **Install flash ring.** Place the non-combustible flash ring over the junction box.
3. **Connect wires.** Connect fixture wires to house wires in the box, black to black, white to white, and equipment ground to equipment ground, using listed wire connectors. Push wires into the box.
4. **Connect fixtures.** Connect the fixture to the junction box or strap using screws provided with the light fixture.
5. **Weatherproof.** Weatherproof/caulk around the base of the fixture, leaving a small gap in the caulking on the bottom to permit drainage of water that may accumulate.
6. **Complete installation.** Install bulb and globe on the fixture and verify proper operation.

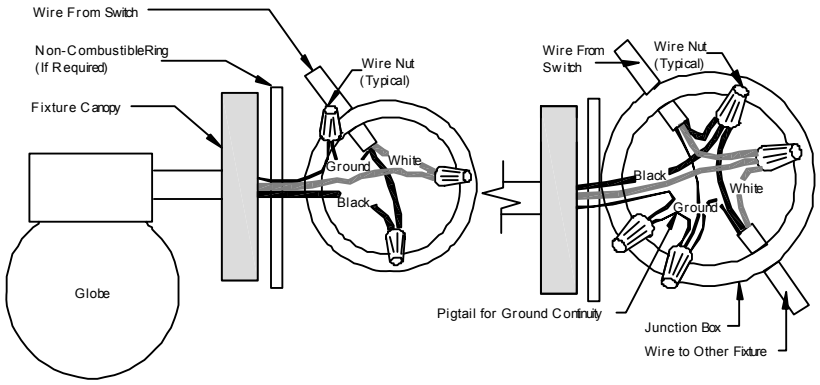

INSTALL CEILING FANS/LIGHTS

Install ceiling fans no closer than 36 inches to a smoke alarm, measured from the tip of the fan blade to the alarm and with the trailing edges of the blades at least six feet-four inches above the finished floor. Comply with all fan manufacturers' instructions and the requirements below.

CEILING FAN/LIGHT MOUNTED TO FACTORY-INSTALLED ELECTRICAL BOX IN CEILING

Before installing the unit, make sure that adequate structural bracing is present in the ceiling. If uncertain, check with the manufacturer. Follow the fan or light manufacturer's instructions to connect the unit and complete the wiring. If the instructions are not available, connect the wiring as shown in **Figure 95**.

Lighting installation. A qualified electrician should install lighting. Before connecting lighting, disconnect power to the lighting circuit. Ground all exterior light fixtures.

Using a non-combustible ring. Install a non-combustible ring completely covering any combustible surfaces the fixtures may be mounted on (e.g. hardboard, clad wood and vinyl siding), or when ceiling material is exposed between the light fixture canopy and the junction box.

Figure 94. *Exterior lighting connection*

Installing ceiling fans. A qualified electrician should install lighting and fans. Before connecting the ceiling fan or light, disconnect power to the fan wires. Any unit installed outside of the home (such as in a porch ceiling) shall be listed for wet locations.

Choosing ceiling fan junction boxes. Connect ceiling fans only to junction boxes listed and marked for ceiling fan applications in accordance with Article 314.27(b) of 2005 NEC. Always ground metal junction boxes.

Selecting fan weight. Do not use any ceiling fans or light fixtures that exceed the weight rating of the box (35 lbs unless otherwise noted).

Grounding electrical devices. Ground fans/lights using a fixture-grounding device or a fixture-grounding wire as specified in the manufacturer's instructions

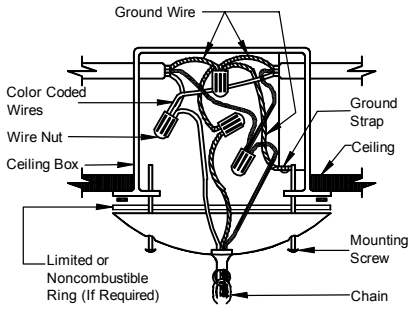

Figure 95. *Wiring for a ceiling fan or chain-hung light fixture with a maximum weight of 35 lbs*

TEST ELECTRICAL SYSTEM

After completion of all electrical wiring and connections, including crossovers, appliances, lights, and ceiling fans, inspect and test the electrical system as follows:

1. **Fill water heater.** Fill water heater before turning on power to the home or switching on the circuit breaker.
2. **Test continuity.** Before turning on the electrical power to the home, conduct an electrical continuity test to ensure that exposed metallic parts of the home and the chassis are effectively bonded. Check continuity as follow:
   - Between chassis frame and metal gas piping
   - Between chassis frame and metal water piping (if any)
   - Between chassis frame and metal raceway below electrical panel box
   - Between one riser of metal heat duct and convenient ground

   Investigate and correct any loss of grounding continuity.

   NOTE—Continuity is not required on metal inlet of plastic piped water system. When plumbing fixtures such as metallic sinks, tubs, faucets and shower risers are connected only to plastic water piping and plastic drain piping, continuity to ground is not required.
3. **Test operation.** After turning on the electrical power to the home, conduct operational tests of all devices (except water heaters, electric ranges, electric furnaces, dishwashers, clothes washers/dryers, and portable appliances) to demonstrate that they are connected and in working order. Install light bulbs if not already installed and check fixture for proper operation. Correct any defective situations discovered.
4. **Test receptacle polarity.** After turning on the electrical power to the home, conduct electrical polarity checks on all receptacles to determine that there are no conditions of reversed polarity, open grounds or shorts. Repair or replace any defective receptacles or wiring.

► go to **Complete Exterior Work** (p. 97).

Complete Exterior Work

This chapter covers sealing the bottom board, installing the ground cover and skirting, preparing wind protection shutters, and completing site-built structures.

Follow the Steps below:

- **STEP 1. REPAIR AND SEAL BOTTOM BOARD** (p. 97)
- **STEP 2. INSTALL GROUND MOISTURE RETARDER** (p. 97)
- **STEP 3. INSTALL SKIRTING** (p. 98)
- **STEP 4. ASSEMBLE OPTIONAL WIND PROTECTION SHUTTERS** (p. 99)
- **STEP 5. COMPLETE SITE-BUILT STRUCTURES** (p. 100)

STEP 1. REPAIR AND SEAL BOTTOM BOARD

Tears and openings in the bottom board can result from transportation or installation activities. Inspect for holes and gaps the entire bottom board, especially areas around service penetrations, crossover connections, pipe and duct hangers, foundation elements, and the perimeter of the floor. Using approved materials appropriate for the type of repair, repair the bottom board wherever torn or loosened as follows:

1. **Insulate.** Replace any missing insulation prior to closure and repair of the bottom board, paying particular attention to insulation gaps that may have been created at P-traps.
2. **Repair large openings.** Repair large openings with a durable patch made of bottom board fabric or other compatible material and fastened with vinyl bottom board tape held in place by fasteners installed with a divergent stapler. Seal the edges around patches with foam or mastic. For large openings, install a rigid backer board behind the bottom board to provide a fastening substrate for the patch.
3. **Repair small openings**. Repair small gaps and tears with a combination of vinyl bottom board tape, patches, mastic, or foam sealant.

STEP 2. INSTALL GROUND MOISTURE RETARDER

If the space under the home is to be enclosed with skirting or other materials, a ground moisture retarder of a minimum six mil thick polyethylene sheeting or equivalent must be installed covering the ground under the home. Moisture retarders are not required in arid regions (less than 15 inches of rainfall annually) with dry soil conditions. If on-grade (surface) footings are used, install the ground moisture retarder prior to placing the footings, or install it around the footings after all other work under the home is complete.

Install the ground moisture retarder as follows:

1. **Apply sheeting.** Unroll the ground moisture overlapping joints in the sheeting a minimum of 12 inches and covering the entire area under the home except for areas under recessed entries, decks, and porches.
2. **Seal joints.** Seal joints in the retarder with mastic.
3. **Weigh down.** To keep the retarder in place, weigh it down with stones, concrete blocks, or other heavy, durable materials.
4. **Repair tears.** Repair any voids or tears in the retarder by patching with like material, maintaining a minimum 12-inch overlap and sealing joints with mastic.

Sealing bottom boards. A continuous and sealed bottom board is critical for home performance, energy efficiency, protection against moisture problems, prevention of pipe freezing, and protection against insects and rodents.

Bottom board sealing methods. Tapes shall never be used alone to repair a bottom board. Divergent staples or mastic must be used in tandem with tape to prevent future tear off.

Fastening vinyl siding. Do not install fasteners directly into vinyl siding. Allow for siding thermal expansion by pre-drilling minimum 1/2 inch diameter fastener holes or fastening skirting to a ledger under the home (see Best Practice tip).

Avoiding radon. For enclosed perimeter wall crawlspace foundations in areas where radon is commonly found in the soil, continue the moisture retarder up the perimeter wall

STEP 3. INSTALL SKIRTING

Skirting is any structural or non-structural perimeter crawlspace enclosure. Complete site-built structures (see **STEP 5. COMPLETE SITE-BUILT STRUCTURES**, p.100) that abut the home (such as porches, attached garages, and steps) prior to installing skirting.

TABLE 33. SKIRTING SYSTEM MATERIALS SPECIFICATIONS

Component	Specification
Skirting	Skirting must be of weather-resistant materials or provided with protection against weather deterioration at least equivalent to that provided by a coating of zinc on steel of not less than 0.30 oz per sq ft of surface coated. Skirting made from wood or wood products and used within six inches of the ground needs to be made of materials naturally resistant to decay and termite infestation or pressure-treated.
Vents	Ventilation openings must be covered for their full height and width with a perforated (1/4 inch maximum opening in any dimension) corrosion and weather-resistant covering that is designed to prevent the entry of rodents. Manually operable vents shall not be used.

To design and install skirting, comply with the skirting manufacturer's instructions (if provided) and the following:

1. **Configure skirting.** Run the skirting along the perimeter of the home's heated, conditioned space. Do not enclose with skirting areas under recessed entries, porches, or decks (whether constructed as part of the home or added on site) unless skirting is of the fully vented type and installed so as to allow water to freely flow out from under the home.
2. **Fasten skirting.** Attach skirting to the home in a manner that prevents water from being trapped between the siding or trim and the skirting or forced up into the wall cavities trim to which it is attached. Allow for frost heave when installing skirting in areas subject to frost.
3. **Provide ventilation.** Unless the skirting has integral ventilation openings that meet the following ventilation requirements, install equally sized ventilation openings on at least two opposite sides of the foundation. Size ventilation area to equal at least one square foot for each 150 square feet of under-floor area (or for each 1,500 square feet if a ground moisture retarder is installed according to **STEP 2. INSTALL GROUND MOISTURE RETARDER**, p. 97). Place vents as high above the ground as practical.
4. **Install access.** Provide an access opening not less than 18 inches wide and 24 inches high and located so that any utility connections located under the home are accessible.
5. **Extend vents, drains, and inlets.** Run appliance exhaust vents, combustion air inlets, and air conditioner condensation drains through the skirting to the outside and terminate each as instructed in the sections of this manual corresponding to each appliance.

at least 12 inches, sealing the edges and between the seams with mastic.

Avoid backfilling against skirting. Do not backfill against non-structural skirting.

Skirting and decks. Homes with open slatted decking (recessed entries, porches, or decks) must have skirting or foundation behind these areas to prevent water from draining back under the home.

Freezing climates. Skirting should not be relied upon to prevent freezing of the plumbing underneath the home. Neither should skirting be relied upon to reduce the need for frost protection of the footings as described elsewhere in this manual.

Ventilation importance. The area under the home must be properly ventilated to minimize the accumulation of moisture. Failure to provide adequate ventilation may result in moisture migration into the home itself resulting in high humidity, formation of condensation, and even ice on cold surfaces.

Operable Vents. Manually operated vents shall not be used. Improper operation of such vents can easily trap moisture and provide no protection against frost.

STEP 4. ASSEMBLE OPTIONAL WIND PROTECTION SHUTTERS

If desired, prepare temporary protective window covers for use during severe wind storms and hurricanes according to **Figure 96**, **Figure 97**, **Table 34**, and the procedure below.

Sheathing shown in **Table 34** must be labeled "APA Rated Sheathing, Exterior" or equivalent. Where any portion of the window or sliding glass door opening is within 3 feet of the corner of the home, use the appropriate "corner" materials as shown in **Table 34**. For ease of removal, it is recommended that all nailing for the shutters be done with double-headed nails.

After use, remove shutters from the home, patch nail holes in the home with caulk and store them for possible reuse.

Window protection. This home has not been equipped with storm shutters or other protective coverings for the windows and door openings. Even though the windows and doors have been approved for use in the wind zone for which the home is labeled, it is strongly recommended that all exterior glass (in any window or door) be protected by the shutters shown in this step.

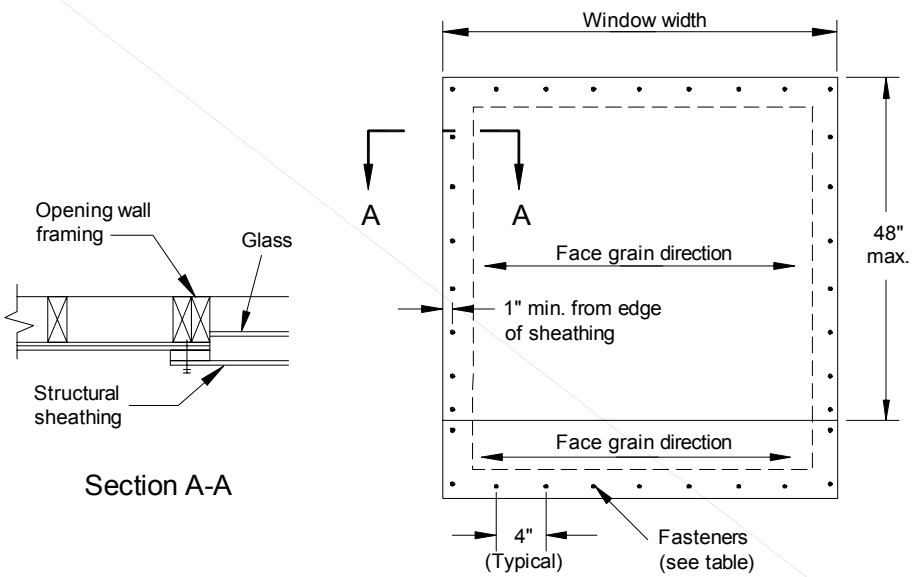

Figure 96. *Wind Protection Shutters Constructed of Sheathing*

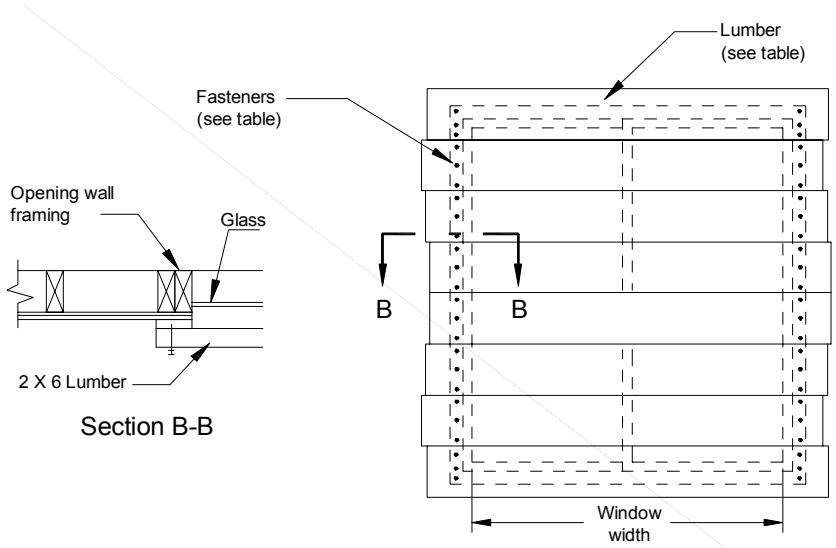

Figure 97. *Wind Protection Shutters Constructed of Lumber*

08-21-2009

TABLE 34. SHUTTER CONSTRUCTION SPECIFICATIONS

Window width	Wind Zone II (non-corners)		Wind Zone II (corners)		Wind Zone II or III (corners or non-corners)	
	Shutter material	Fastening	Shutter material	Fastening	Shutter Material	Fastening
Up to 36"	1 layer 15/32" sheathing 32/16 span rating	20d nails (0.131" x 4") at 4" oc along edges	2 layers 15/32" sheathing 32/16 span rating	1st layer 20d nails at 4" oc 2nd layer 40d nails (0.131"x5") at 3" oc along edges	2x6 #2 SPF	20d nails (0.131" x 4") 3 each at each end of board
Up to 48"	1 layer 23/32" sheathing 48/24 span rating		2 layers 23/32" sheathing 48/24 span rating		2x6 #2 SPF	
Up to 72"	1 layer 1-1/8" sheathing 48" oc span rating		2 layers 1-1/8" sheathing 48" oc span rating		2x6 #2 SPF	

STEP 5. COMPLETE SITE-BUILT STRUCTURES

Install site-built structures such as steps, landings, garages, awnings, carports, breezeways, porches, decks, railings, sheds, and utility rooms according to manufacturer's instructions (if any), in compliance with all local regulations including fire separation and electrical requirements, and according to the following:

- Do not obstruct any of the two required exit doors from the home.
- Construct site-built structures to be structurally independent unless provided for in the design of the home (instructions will be provided by the manufacturer). The only connections to the home should be for appearance or water drainage and should not transmit any loads to any part of the home.
- Do not damage the integrity of the home's structural or weatherproofing system. Seal any weatherproofing connections between the site-built structure and the home and flash any roof connections.
- Utilize only GFCI outlets for site-built structures.
- Install and test smoke alarms in any site-built structures according to local code.
- Any site built structure must provide its own heating and cooling, light and ventilation, and egress means independent of the manufactured home.

Designing site-built structures. All site-built structures must support their own dead, live, and wind loads and must not transmit any loads to the home's structure. All carports, awnings and patio covers should be free-standing.

► go to **Prepare Home for Occupancy** (p. 101).

08-21-2009

Prepare Home for Occupancy

Follow these steps for final inspection and completion of the home.

Follow the Steps below:

- **STEP 1. VERIFY ALTERNATIVE CONSTRUCTION (A/C) INSPECTION** (p. 101)
- **STEP 2. COMPLETE INSPECTION CHECKLIST** (p. 101)
- **STEP 3. COMPLETE ENERGY STAR CHECKLIST** (p. 101)
- **STEP 4. CLEAN THE HOME** (p. 101)

STEP 1. VERIFY ALTERNATIVE CONSTRUCTION (A/C) INSPECTION

This is normally the responsibility of the retailer and the manufacturer, however, the installation is not complete until the alternative construction inspection has been passed and documented.

STEP 2. COMPLETE INSPECTION CHECKLIST

After all previous steps have been accomplished, inspect the home to verify that it has been completely and properly installed using the checklist starting on p. 102.

Correct any deficiencies found, if possible, or if not possible, inform the retailer or manufacturer immediately.

STEP 3. COMPLETE ENERGY STAR CHECKLIST

For ENERGY STAR qualified homes (check with the retailer or manufacturer), this step is to be completed by the manufacturer's designated representative. Ask the retailer or the manufacturer who this is.

The manufacturer's representative must complete the Energy Star Site Installation Checklist, obtain signatures on the ENERGY STAR label, and return the completed ENERGY STAR Site Installation Checklist to the manufacturing plant.

STEP 4. CLEAN THE HOME

Remove and properly dispose of all installation-generated dust, debris, and packaging materials from the home and the surrounding property. Ensure that the home is in "move-in" condition.

Installation is Complete

Complete Installation Checklist

Use this checklist to confirm that the listed aspects of the installation are complete and correct.

FOUNDATION

- Footings properly sized and constructed for the soil conditions
- Pier spacing per data plate and applicable table and roof load zone
- Piers properly constructed and vertical
- Perimeter blocking installed (if required)
- Piers at each side of large sidewall openings
- Center line piers installed at columns
- Shims in place and tight

ANCHORS

- Approved anchors are used
- Anchors are installed at correct angles
- Anchor spacing and installation correct
- Longitudinal ties installed (if required)
- Anchor straps are tensioned

UNDER THE HOME

- Moisture retarder installed
- The ground is properly graded to prevent water accumulation
- HVAC ducts are supported off the ground and connected tightly to collars at all ends
- Fireplace combustion air intake free and unrestricted
- No holes or tears in bottom board
- Skirting has been installed per manufacturer's instructions with proper venting and provision for frost heave
- Dryer vent, range/cook top exhaust, water heater temperature and pressure overflow pipe and AC condensate drain installed to perimeter of crawl space

EXTERIOR

- Shingled roofs are free of visible damage and serious defects and there are no missing or loose shingles
- Shingle close-up and ridge cap have been completed per applicable details
- All hold down straps on shingled roofs have been removed and staple holes have been properly sealed
- Penetrations at roof stacks, vents and chimneys have been properly sealed
- Siding and trim is free of gaps, voids, missing fasteners, damage, and serious defects. All seams are sealed and hardboard edges are sealed
- Drip edge and fascia is properly installed and free of damage and serious defects
- Gutters and downspouts are installed properly such that water is diverted away from the home
- Trees and bushes have been trimmed to prevent brushing against the home in windy conditions or under snow loads
- The HUD label is exposed, intact and legible
- The exterior of the home and immediate surroundings is clean, clear of construction materials, dust, and debris

Limits of the checklist. This checklist is not all-inclusive. Some homes have important features not listed here. Completing this checklist does not guarantee that all installation requirements have been met.

INTERIOR

- Ceilings, walls, and floor coverings are free from damage and serious defects
- Carpeting is properly stretched and seamed
- All trim and molding is installed properly and free of damage and defects
- All cabinets, countertops, plumbing fixtures, appliances, furnishings, and window coverings are free of damage or serious defects
- All cabinet doors and drawers work properly
- All interior and exterior doors and windows open, close, and latch properly
- One window in each bedroom meets emergency egress requirements, has operating instruction labels on it, and operates properly
- All temporary shipping hardware has been removed
- Floors are level
- The data plate is intact and legible
- Smoke alarms have been tested
- The interior of the home is clean, clear of materials, dust, and debris

WATER AND DRAIN SYSTEMS

- Crossover and service connection and splices have been properly made with correct materials
- Water and drain lines are insulated or otherwise protected from freezing
- Pipe supports are installed and properly spaced
- Proper slope has been maintained on all drain lines
- All necessary inspections and tests have been performed
- All sinks, basins, tubs, and toilets operate properly
- All hot and cold water lines are properly connected to fixtures, dispense water as labeled, and operate properly

ELECTRICAL SYSTEMS

- The panel amperage matches the connection to the home
- The home has been properly grounded
- The main power supply has been properly connected and tested by a licensed electrician
- All electrical crossovers have been connected
- All receptacles, switches, and light fixtures operate properly
- Ground fault circuit interrupters operate properly
- All exterior lights have been properly installed

GAS/FUEL OIL SYSTEMS

- The gas system pressure test has been conducted
- Connections between units are properly made with access as required
- The main fuel line has been properly connected and tested by a qualified technician

APPLIANCE OPERATING AND VENTING

- All appliances are working properly
- Appliance venting is in accordance with the manufacturer's instructions
- Fresh air intakes are properly installed
- Whole house, kitchen, and bath exhaust fan operation are correct
- Fireplace chimney stack extension and roof cap have been installed in

accordance with the manufacturer's instructions

Air conditioner/heat pump is sized properly

MISCELLANEOUS

Installation/anchoring certificates or seals have been issued and installed (if required)

Owner's and operation manuals are available for all appliances

This installation manual is left with home

CHANGES TO THE MANUAL SINCE THE LAST PUBLICATION

The table below lists the locations in the manual where text, data, or figures were altered or amended from the previous publication.

Page	Chapter	Step	Change	Reason for Change

Adventure Homes
of Garrett, IN. LLC
1119 Fuller Dr.
Garrett, IN 46738
(260) 357-1963