Plumbing Guidelines

2012 IBC/ANSI A117.1-2009

This document provides basic and fundamental information for accessible plumbing fixtures, toilet rooms and bathing facilities. It is not intended to replace or substitute for the requirements found in the Minnesota Accessibility Code, Chapter 1341.

Drinking Fountains.

If only one drinking fountain location is provided on a floor, the drinking fountain shall provide a spout for wheelchair users and one for standing individuals.

If more than one drinking fountain location is provided on a floor, one-half of the fountains shall be mounted at the wheelchair accessible height and one-half at the standing height.

Wheelchair accessible height drinking fountains shall meet the following criteria:

Spout Height and Location. The spout on wheelchair accessible drinking fountains shall be mounted no more than 36 inches above the floor. The spout shall be at the front of the unit and direct the flow of water parallel to or nearly parallel to the front of the unit. At least a 4 inch high flow of water shall be provided.

Operating Control. The operating controls shall be reachable from the front of the unit. They shall be operable with one hand, not require tight grasping, pinching or twisting of the wrist, and operate with no more than 5 lbs. of force.

Clearances. A clear floor space for a forward approach to the unit shall be provided with toe and knee clearances provided beneath the unit.

Drinking fountains for standing persons shall meet the following criteria:

Spout Height and Location. The spout for drinking fountains for standing persons shall be mounted between 38 inches and 43 inches above the floor. The spout shall be no more than 5 inches from the front of the unit and direct the flow of water parallel to or nearly parallel to the front of the unit. At least a 4 inch high flow of water shall be provided.

Operating Control. The operating controls shall be reachable from the front of the unit. They shall be operable with one hand, not require tight grasping, pinching or twisting of the wrist, and operate with no more than 5 lbs. of force.

Toilet Rooms and Bathing Facilities.

Every new or altered toilet room or bathroom must be accessible (see the Minnesota Accessibility Code for multiple unisex toilet/bath rooms). At least one of each type fixture or amenity must be accessible (see urinals below). If multiple toilet compartments are provided in the room, at least one must be a side transfer compartment. If there are two or more toilet compartments provided in the same room, an ambulatory toilet compartment shall be provided in addition to the transfer compartment.

Doors. Accessible doors must provide a 32 inch clear opening measured with the door open 90 degrees. Door hardware must be operable with one hand and not require tight grasping, pinching or twisting of the wrist to operate. If doors swing into a room or compartment, there must be a 30 inch by 48 inch clear floor space within the room that is clear of the swing of the door. Doors shall not swing into the clear floor space for any fixture unless the room is for individual use.

Clear Floor Space. A turning space must be provided in each toilet room. The turning space may include knee and toe clearances under fixtures and the door may swing over the turning space. The clear floor space at fixtures, amenities and turning space may overlap and all shall adjoin an accessible route.

Diaper Changing Table. If diaper changing tables are provided, the work surface, in the open position, shall be no more than 34 inches above the floor. Knee and toe clearance shall be provided beneath the open changing table. Changing tables shall not be located in toilet compartments.

Transfer Type Water Closets.

Clear Floor Space. A clearance around the water closet shall be provided that is 60 inches minimum in width and either 78 inches total in depth or 48 inches clear in front of the water closet. The water closet shall be located 16 inches to 18 inches from one side wall measured to the centerline of the water closet.
No other fixtures may encroach into the clear floor space at the water closet. Clear floor space may be arranged to allow either a left or right hand approach to the water closet.

Seat Height. The top of the seat for an accessible water closet shall be between 17 inches and 19 inches above the floor.

Grab Bars. Grab bars shall have a diameter of 1 ¼ inches to 2 inches and be mounted 1 ½ inches from the inside of the bar to the wall on which they are located. Mounting locations shall be as shown in diagrams.

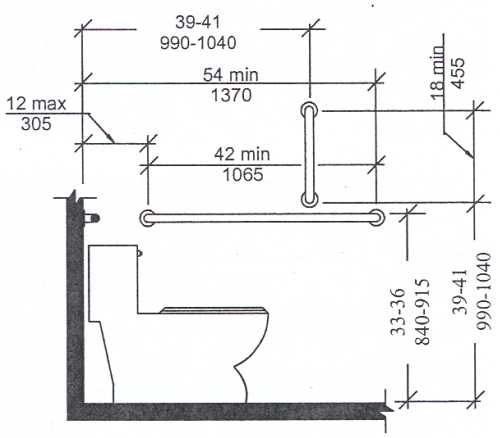

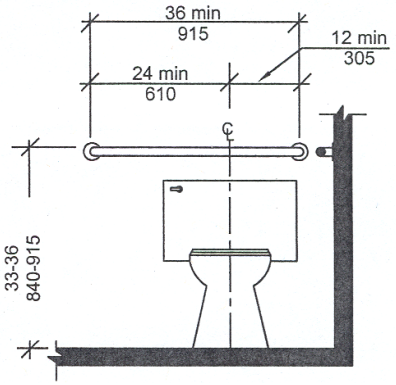

Flush Controls. Flush controls shall be hand operated or automatic. Hand operated controls shall be located no more than 48 inches above the floor on the transfer side of the water closet, operate with one hand without requiring tight grasping, pinching or twisting of the wrist, and function with no more than 5 lbs. of force.

Toilet Paper Dispenser Operable parts of dispensers and sanitary product receptacles shall be located within an area 24 inches minimum and 42 inches maximum from the rear wall, and 18 inches minimum above the floor and 1-1/2 inches minimum below the horizontal grab bar. Dispensers that control delivery or do not permit continuous paper flow shall not be used.

Ambulatory Water Closet Compartments.

Clear Floor Space. A clearance around the water closet shall be provided that is 36 inches in width and 60 inches minimum in depth. The water closet shall be located 17 inches to 19 inches from one side wall measured to the centerline of the water closet.

Grab Bars. Grab bars shall have a diameter of 1 ¼ inches to 2 inches and be mounted 1 ½ inches from the inside of the bar to the wall on which they are located. Grab bars shall be located on both side walls as shown in the diagram above. A rear wall grab bar is not required.

Urinals.

Where more than one urinal is provided in a room, at least one shall be accessible.

Height. Urinals may be stall type extending to the floor or wall mounted. If wall mounted, the rim of the urinal must be no more than 17 inches above the floor.

Clear Floor Space. A clear floor space 30 inches by 48 inches must be provided for forward approach to the urinal.

Flush controls. Flush controls shall be hand operated or automatic. Hand operated controls shall be located no more than 48 inches above the floor, operate with one hand without requiring tight grasping, pinching or twisting of the wrist, and function with no more than 5 lbs. of force.

Lavatories and Mirrors.

Height and Clearances. A clear floor space 30 inches by 48 inches shall provide a forward approach to the fixture. The clear floor space shall extend a minimum

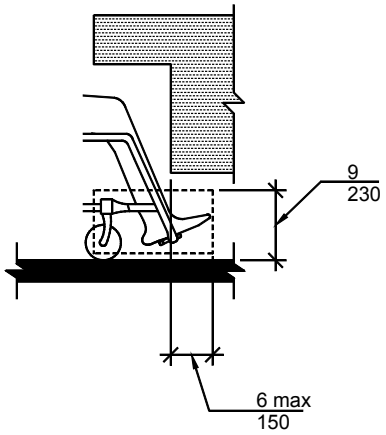

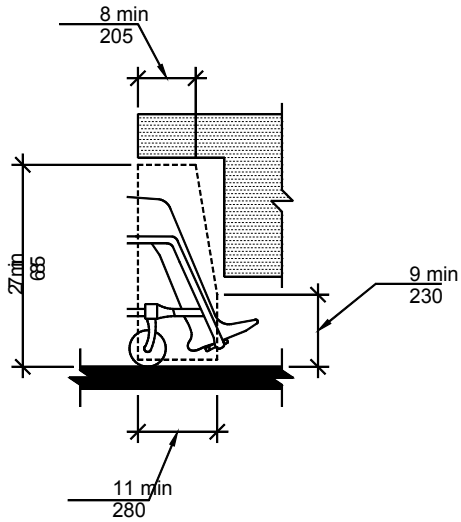

of 17 inches beneath the lavatory. The higher of the rim or counter shall be 34 inches maximum above the floor. Knee and toe clearance shall be provided as shown in diagrams.

Exposed Pipes. Hot water and drain pipes under lavatories shall be insulated or otherwise configured to protect against contact. There shall be no sharp or abrasive surfaces under the lavatory.

Faucets. Faucet controls shall be operable with one hand, not require tight grasping, pinching or twisting of the wrist, and function with no more than 5 lbs. of force.

Mirrors. Mirrors located above lavatories shall be mounted with the bottom edge of the reflecting surface no higher than 40 inches above the floor. Mirrors not located above lavatories, sinks or counters shall be mounted with the bottom edge of the reflecting surface 35 inches maximum above the floor.

Bathtubs.

Clear Floor Space. A clear floor space 30 inches wide shall be provided adjacent to the tub for the entire length of the tub.

Seat. An in-tub seat or a seat at the head end of the tub shall be provided. Seats shall be mounted securely and shall not slip during use.

Grab Bars. Grab bars shall have a diameter of 1 ¼ inches to 2 inches and be mounted 1 ½ inches from the inside of the bar to the wall on which they are located. Mounting locations shall be as shown in diagrams.

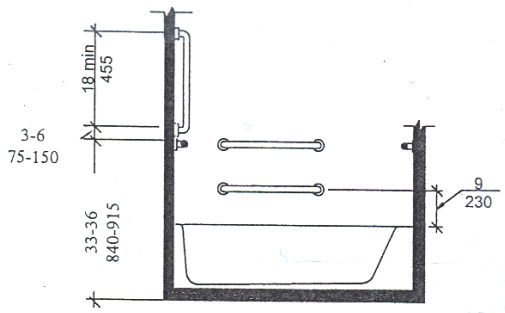

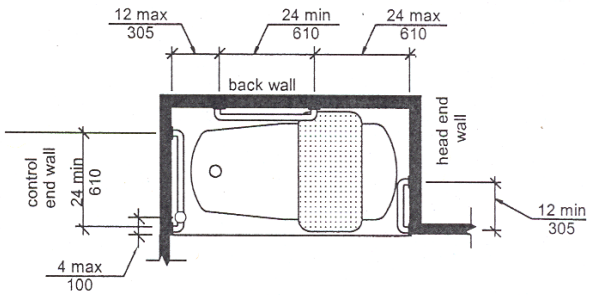

Controls. Faucets and other controls shall be operable with one hand, not require tight grasping, pinching or twisting of the wrist, and operate with no more than 5 lbs. of force. A shower spray unit with a hose at least 60 inches long that can be used as both a fixed shower head and as a hand-held shower shall be provided.

Bathtub Enclosures. If enclosures for bathtubs are provided they shall not obstruct controls or transfer into the tub. The enclosure shall not have tracks mounted on the rim of the tub.

Shower Compartments.

Size and Clearances. Transfer type shower compartments shall have an inside finished dimension of 36 inches by 36 inches. Roll-in type showers shall be 30 inches minimum by 60 inches minimum. See Minnesota Accessibility Code for alternate roll-in type shower.

Seat. A folding or non-folding seat shall be provided in the transfer type shower. A folding seat is required in the roll-in shower. Seats shall be mounted between 17 inches and 19 inches above the shower floor.

Grab Bars. Grab bars shall have a diameter of 1 ¼ inches to 2 inches and be mounted 1 ½ inches from the inside of the bar to the wall on which they are located. Mounting locations shall be as shown in diagrams.

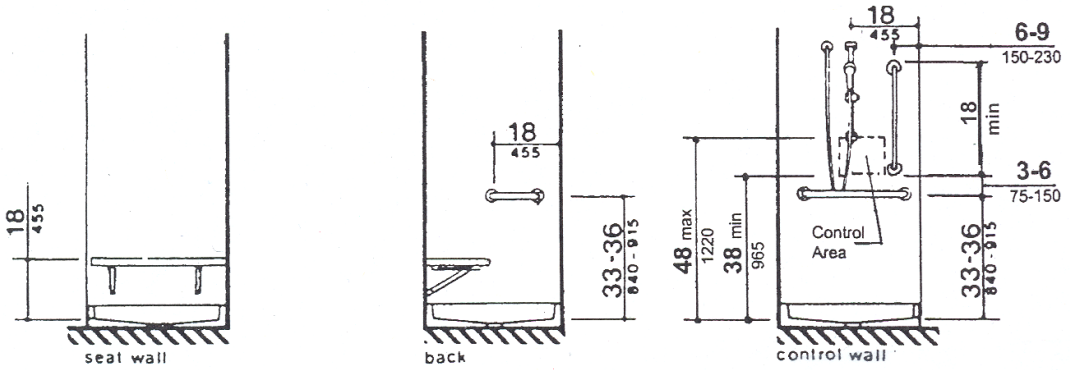

36 X 36 Compartment

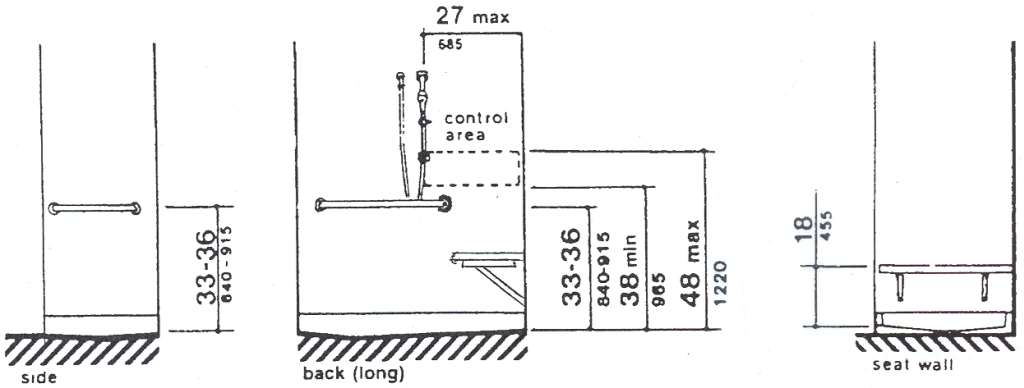

30 X 60 Compartment

Controls. Faucets and other controls shall be operable with one hand, not require tight grasping, pinching or twisting of the wrist, and operate with no more than 5 lbs. of force. A shower spray unit with a hose at least 60 inches long that can be used as both a fixed shower head and as a hand-held shower shall be provided.

Curbs. If provided, curbs shall be 1/2 inch in height maximum. In roll-in type showers, the edges shall be beveled no more than 1:2.

Shower Enclosures. If provided, shower enclosures shall not obstruct controls or transfer onto shower seat.

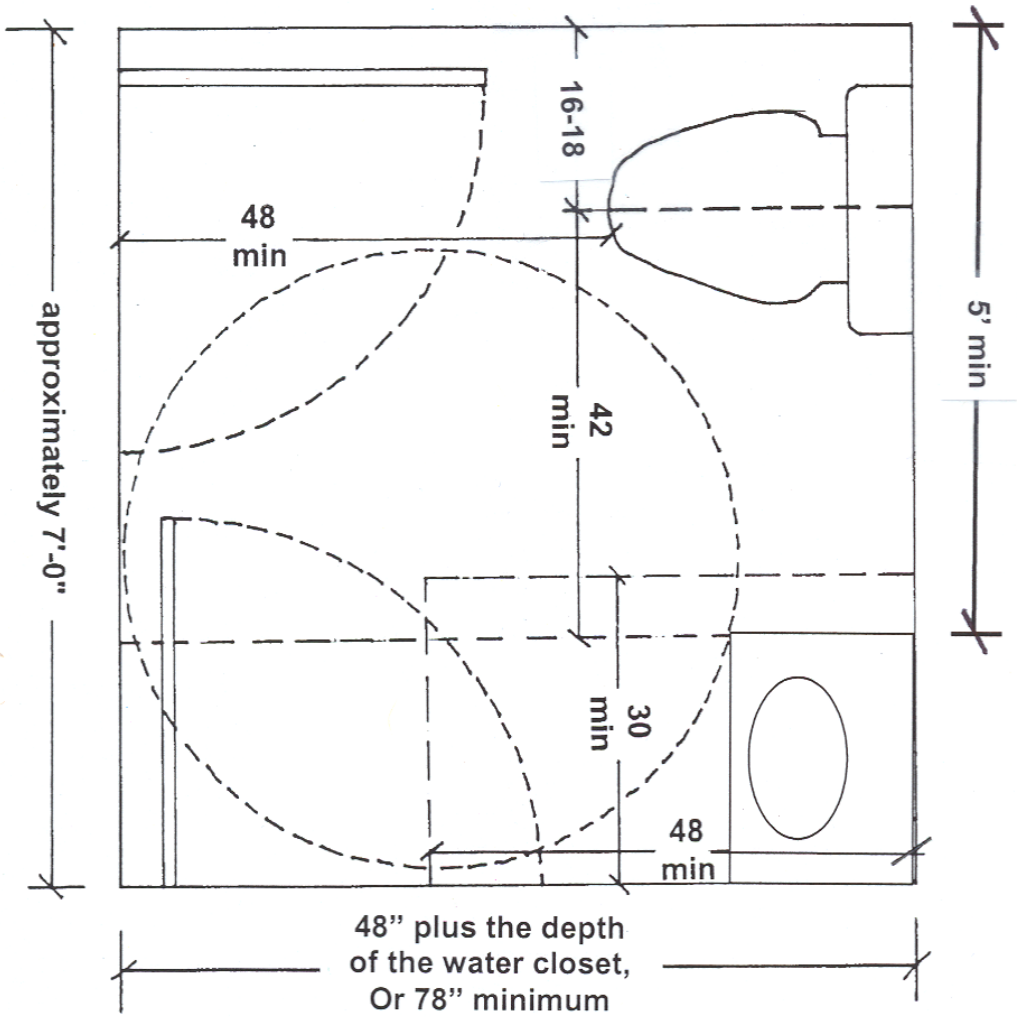

Possible design option for single use toilet room

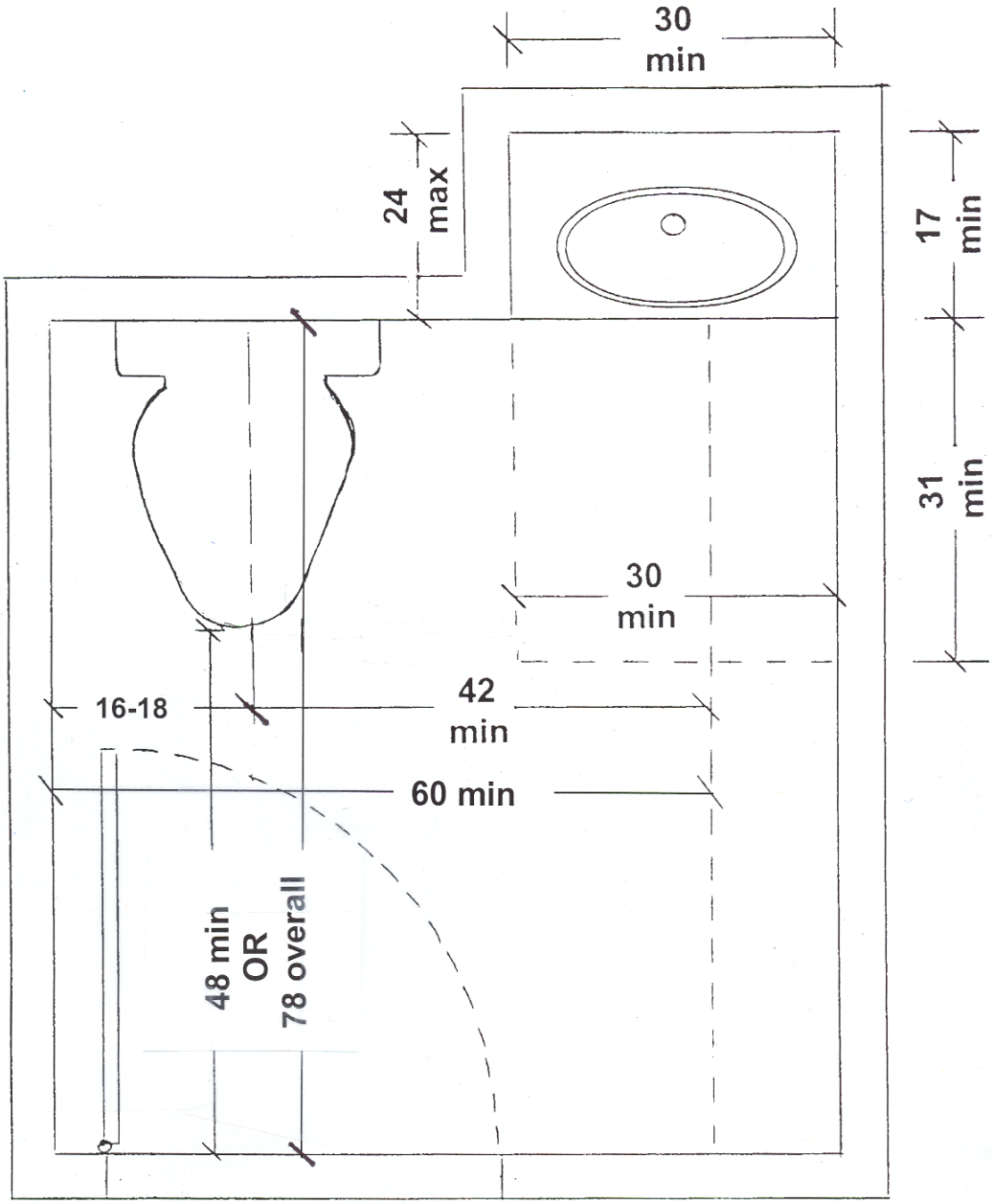

Possible design option for single use toilet room